STATION 57 ADDITIONS

GIG HARBOR FIRE AND MEDIC ONE

BID SET

PROJECT INFORMATION 57

PROJECT DESCRIPTION
MINOR ADDITIONS (1,034 SF) TO EXISTING FUNCTIONAL FIRESTATION. NO CHANGE IN USE OR OCCUPANCY WILL RESULT FROM CREATION OF NEW OPERATIONAL SUPPORT SPACES ADJACENT TO THE EXISTING APPARATUS BAY AND (1) NEW SLEEP ROOM AND RECONFIGURATION OF THE EXISTING FITNESS ROOM.

SITE ADDRESS
10521 CRESCENT VALLEY DRIVE NW
GIG HARBOR, WA 98332

SITE ZONING
RURAL SENSITIVE RESOURCE

LEGAL DESCRIPTION
Section 32 Township 22 Range 02 Quarter 13 L 1 OF S P 76-674 EXC POR CYD TO P CO PER ETN 4277902 OUT OF 1-014 SEG K-1187 TK NF JW (DCJEAEMS4-5-82 & DCWJES9-30-82) DC00267210 10/8/12 KG

PARCEL NUMBER(S)
0222325001

AUTHORITY HAVING JURISDICTION
PIERCE COUNTY PLANNING & PUBLIC WORKS
2401 SOUTH 35TH STREET
TACOMA, WA 98409
(253)798-7250

BUILDING INFORMATION
CONSTRUCTION TYPE: VB
OCCUPANCY GROUP(S): S-2, R-3
GROSS AREA: 1,133 SF
HEIGHT ABOVE GRADE PLANE: 15'-8"

SEE CODE SUMMARY FOR ADDITIONAL INFORMATION.

VICINITY MAP

NORTH

OWNER
PIERCE COUNTY FIRE DISTRICT #5
10222 BUJACICH AVE NW
GIG HARBOR, WASHINGTON 98332

JOHN JOHNSON, ASSISTANT CHIEF
(253)677-1331
jjohnson@gigharborfire.org

CIVIL ENGINEER
MACKAY SPOSITO
33810 Weyerhaeuser Way S, Suite 130
Federal Way, WA 98001

Eric Pilcher
(253) 237- 7932
epilcher@mackaysposito.com

LANDSCAPE ARCHITECT
MACKAY SPOSITO
33810 Weyerhaeuser Way S, Suite 130
Federal Way, WA 98001

Eric Pilcher
(253) 237-7932
epilcher@mackaysposito.com

ARCHITECT
RICE FERGUS MILLER
275 5TH ST, SUITE 100
BREMERTON, WA 98337

GUNNAR GLADICS, ARCHITECT OF RECORD
(360) 377-8773

HOWARD STRUVE, PROJECT MANAGER
(360) 377-8773
HSTRUVE@RFMARCH.COM

STRUCTURAL ENGINEER
REID MIDDLETON, INC
728 134th St SW
Everett, WA

Katy Brawner
(425)312-0290
kbrawner@middleton.com

MECHANICAL ENGINEER
SIDER & BYERS
192 Nickerson, Suite 300
Seattle, WA 98109

JAMES WHIGHAM
(206)285-2966
james@siderbyers.com

ELECTRICAL ENGINEER
BCE Engineers, Inc.
6021 12th Street E, Suite 200
Fife, WA 98424

Carrie Taylor
(253)922-0446
carrie.taylor@bceengineers.com

RICE fergus MILLER
ARCHITECTURE INTERIORS PLANNING VIZLAB
275 FIFTH STREET, SUITE 100
BREMERTON, WA 98337
360-377-8773
RFMARCH.COM

22020863
REGISTERED ARCHITECT
GUNNAR R. GLADICS
STATE OF WASHINGTON

STATION 57 ADDITION
GIG HARBOR FIRE AND MEDIC ONE
10521 CRESCENT VALLEY DR. NW
GIG HARBOR, WA 98332

PROJECT #	2022010.03
BID SET	
ISSUE DATE	JANUARY 8, 2024

REVISION SCHEDULE

AHJ APPROVAL STAMP

PROJECT INFORMATION, VICINITY MAP, PROJECT DESIGN TEAM

SHEET #
A00.01b

ABBREVIATIONS

-- A --	
A	AMP
AA	ART & ACCESSORIES
AB	ANCHOR BOLT
AC	AIR CONDITIONING
ACST	ACOUSTIC(AL)
ACT	ACOUSTIC CEILING TILE
AD	AREA DRAIN
ADJ	ADJACENT, ADJUST(ABLE)
AFF	ABOVE FLOOR FINISH
AHU	AIR HANDLING UNIT
ALT	ALTERNATE
ALUM	ALUMINUM
AP	ACCESS PANEL
APPROX	APPROXIMATELY
ARCH	ARCHITECT(URAL)
ASPH	ASPHALT
AUTO	AUTOMATIC
AUX	AUXILIARY
AV	AUDIO VISUAL
-- B --	
BATH	BATHROOM
BD	BOARD
BED	BEDROOM
BLDG	BUILDING
BLKG	BLOCKING
BM	BEAM
BO	BOTTOM OF
BOB	BOTTOM OF BEAM
BOD	BOTTOM OF DECK
BOF	BOTTOM OF FRAMING
BOJ	BOTTOM OF JOIST
BTW	BETWEEN
BUR	BUILT UP ROOF(ING)
-- C --	
CAB	CABINET
CALC	CALCULATION
CB	CATCH BASIN, CORNER BEAD
CEM	CEMENT
CFOI	CONTRACTOR FURNISHED & OWNER INSTALLED
CIP	CAST IN PLACE
CJ	CONTROL JOINT, CONSTRUCTION JOINT
CL	CENTERLINE
CLG	CEILING
CLO	CLOSET
CLR	CLEAR
CMU	CONCRETE MASONRY UNIT
CO	CLEAN OUT
COL	COLUMN
CONC	CONCRETE
CONF	CONFERENCE
CONN	CONNECT(ION)
CONSTR	CONSTRUCTION
CONT	CONTINUE, CONTINUOUS
COORD	COORDINATE
CORR	CORRIDOR
CP	CEMENT PLASTER
CPT	CARPET
CS	CONCRETE SEALER
CSMT	CASEMENT
CTR	CENTER
CW	COLD WATER
-- D --	
D	DEEP, DRYER
DBL	DOUBLE
DEMO	DEMOLISH(ED), DEMOLITION
DEPT	DEPARTMENT
DET	DETAIL
DF	DRINKING FOUNTAIN
DIA	DIAMETER
DIM	DIMENSION
DISP	DISPOSAL
DL	DEAD LOAD
DN	DOWN
DP	DECORATIVE PANEL
DR	DOOR, DINING ROOM, DRAIN
DS	DOWNSPOUT
DW	DISHWASHER
DWG	DRAWING(S)
DWR	DRAWER
-- E --	
(E)	EXISTING
E	EAST
EA	EACH
EC	EDGE OF CURB
EE	EACH END
EIFS	EXTERIOR INSULATION & FINISH SYSTEM
EF	EACH FACE
EJ	EXPANSION JOINT
EL	ELEVATION
ELEC	ELECTRICAL
ELEV	ELEVATOR
EMER	EMERGENCY
ENCL	ENCLOSE(D), ENCLOSURE
EP	ELECTRICAL PANELBOARD
EQ	EQUAL
EQP	EQUIPMENT
EST	ESTIMATE(D)
EW	EACH WAY
EWC	ELECTRIC WATER COOLER
EWH	ELECTRIC WATER HEATER
EXH	EXHAUST
EXP	EXPOSED, EXPANSION
EXT	EXTERIOR
-- F --	
FA	FIRE ALARM
FAAP	FIRE ALARM ANNUNCIATOR PANEL
FD	FLOOR DRAIN
FDC	FIRE DEPARTMENT CONNECTION
FDN	FOUNDATION
FDV	FIRE DEPARTMENT VALVE
FE	FIRE EXTINGUISHER
FEC	FIRE EXTINGUISHER CABINET
FF	FACTORY FINISH, FINISH FACE
FH	FIRE HYDRANT
FHC	FIRE HOSE CABINET
FHR	FIRE HOSE RACK, FIRE HOSE REEL

-- F CONTINUED --	
FIN	FINISH(ED)
FIXT	FIXTURE
FLASH	FLASHING
FLR	FLOOR
FMF	FLEXIBLE MEMBRANE FLASHING
FOB	FACE OF BRICK
FOC	FACE OF CONCRETE
FOF	FACE OF FINISH
FOM	FACE OF MASONRY
FOS	FACE OF STUD
FP	FIREPLACE
FRP	FIBER REINFORCED PANELS
FRTW	FIRE RETARDANT TREATED WOOD
FRZ	FREEZER
FS	FULL SIZE
FCG	FURNITURE-CASEGOODS
FSG	FURNITURE-SOFTGOODS
FT	FOOT, FEET
FTG	FOOTING
FURR	FURRING
-- G --	
G	GROUND
GA	GAUGE
GALV	GALVANIZED
GAR	GARAGE
GB	GRAB BAR
GC	GENERAL CONTRACTOR
GEN	GENERAL
GFRG	GLASS FIBER REINFORCED GYPSUM
GI	GALVANIZED IRON
GL	GLASS, GLAZING
GLF	GLAZING FILM
GLULAM	GLUE LAMINATED
GR	GROSS
GT	GROUT
GWB	GYPSUM WALL BOARD
GYP	GYPSUM SHEATHING
-- H --	
H	HEIGHT, HIGH
HB	HOSE BIB
HC	HOLLOW CORE
HDR	HEADER
HDW	HARDWARE
HDWD	HARDWOOD
HGR	HANGER
HM	HOLLOW METAL
HRL	HANDRAIL
HORIZ	HORIZONTAL
HR	HOUR(S)
HVAC	HEATING, VENTILATION & AIR CONDITIONING
HW	HOT WATER
HWT	HOT WATER TANK
-- I --	
IIC	IMPACT INSULATION CLASS
IN	INCH(ES)
INC	INCREASE
INCL	INCLUDE(D), INCLUDING
INFO	INFORMATION
INSTL	INSTALL(ATION)
INSUL	INSULATION
INT	INTERIOR
-- J --	
JAN	JANITOR
JBOX	JUNCTION BOX
JST	JOIST
JT	JOINT
-- K --	
KD	KILN DRIED
KIT	KITCHEN
KP	KICK PLATE
KW	KILOWATT
-- L --	
L	LEFT, LENGTH, LINEN, LONG
LAB	LABORATORY
LAM	LAMINATE(D)
LAU	LAUNDRY
LAV	LAVATORY
LB(S)	POUND(S)
LD	LIGHTING-DECORATIVE
LDG	LANDING
LF	LINEAL FOOT
LL	LIVE LOAD
LOC	LOCATION
LP	LIGHTING-PORTABLE
LPT	LOW POINT
LR	LIVING ROOM
LRG	LARGE
LT	LIGHT(ING)
LVR	LOUVER
-- M --	
MACH	MACHINE
MAINT	MAINTENANCE
MATL	MATERIAL
MAX	MAXIMUM
MB	MACHINE BOLT
MBR	MASTER BEDROOM
MC	MEDICINE CABINET
MDO	MEDIUM DENSITY OVERLAY
MECH	MECHANIC(AL)
MED	MEDIUM
MEDS	MEDICINE, MEDICAL
MEMB	MEMBRANE
MEZZ	MEZZANINE
MFR	MANUFACTURER
MFRREC	MANUFACTURER'S RECOMMENDATION(S)
MGR	MANAGER
MH	MANHOLE
MIN	MINIMUM
MIR	MIRROR
MISC	MISCELLANEOUS
MO	MASONRY OPENING, MONITOR
M/S	MIRROR & SHELF
MTD	MOUNTED

-- M CONTINUED --	
MTL	METAL
MUL	MULLION
MULT	MULTIPLE
MW	MICROWAVE OVEN
-- N --	
N	NORTH
NA	NOT APPLICABLE
NE	NORTHEAST
NC	NOISE CRITERIA, NURSE CALL
NCAP	NURSE CALL ANNUNCIATOR PANEL
NIC	NOT IN CONTRACT
NO	NUMBER
NOM	NOMINAL
NTS	NOT TO SCALE
NW	NORTHWEST
-- O --	
O/	OVER
OA	OVERALL
OC	ON CENTER
OCC	OCCUPANTS, OCCUPANT LOAD, OCCUPANCY
OD	OUTSIDE DIAMETER
OFCI	OWNER FURNISHED & CONTRACTOR INSTALLED
OFOI	OWNER FURNISHED & OWNER INSTALLED
OFD	OVERFLOW DRAIN
OFF	OFFICE
OGL	OBSCURE GLASS
OH	OVERHEAD
OPH	OPPOSITE HAND
OPNG	OPENING
OPP	OPPOSITE
ORD	OVERFLOW ROOF DRAIN
-- P --	
P	PAINT(ED), PANTRY
PC	PORTLAND CEMENT
PCC	PRECAST CONCRETE
PED	PEDESTAL
PERF	PERFORATED
PERM	PERMANENT
PERP	PERPENDICULAR
PF	PLUMBING FIXTURE
PFP	PREPARED FOR PAINT
PIV	POST INDICATOR VALVE
PL	PLATE, PROPERTY LINE
PLAS	PLASTER
PLBG	PLUMBING
PLY	PLYWOOD
PMTL	PAINTED METAL
PNT	POINT
PP	POWER POLE
PR	PAIR
PREFAB	PREFABRICATE
PRELIM	PRELIMINARY
PRKG	PARKING
PROP	PROPERTY
PS	PROJECTOR SCREEN
PSF	POUNDS PER SQUARE FOOT
PSI	POUNDS PER SQUARE INCH
PT	PRESERVATIVE TREATED, PRESSURE TREATED, POST TENSIONED
PTN	PARTITION
PVC	POLYVINYL CHLORIDE, POLYVINYL CHLORIDE PIPE
PVD	PROVIDE
PVG	PAVING
PVMT	PAVEMENT
PVR	PAVERS
PWR	POWER
-- Q --	
QTY	QUANTITY
QTZ	QUARTZ
-- R --	
R	RISER, RADIUS
RA	RESTROOM ACCESSORY
RCP	REFLECTED CEILING PLAN
RD	ROOF DRAIN
REBAR	REINFORCING BAR
REC	RECESSED
REF	REFERENCE, REFRIGERATOR
REINF	REINFORCE(D), REINFORCING
RES	RESILIENT
REQD	REQUIRED
RET	RETAINING
REV	REVISED, REVISION
RF	RAISED FLOOR(ING)
RM	ROOM
RO	ROUGH OPENING
ROW	RIGTH OF WAY
RP	RADIUS POINT
R/S	ROD & SHELF
RS	ROUGH SAWN
RT	RIGHT
RVL	REVEAL
-- S --	
S	SOUTH, SINK
SAN	SANITARY
SC	SOLID CORE
SCD	SEAT COVER DISPENSER
SCHED	SCHEDULE
SD	STORM DRAIN
SE	SOUTHEAST
SEAL	SEALER, SEALANT
SECT	SECTION
SEP	SEPARATION
SF	SQUARE FEET
SG	SAFETY GLASS, SAFETY GLAZING
SHR	SHOWER
SHTG	SHEATHING, SHEETING
SHLV	SHELVING
SIM	SIMILAR
SM	SHEET METAL
SOG	SLAB ON GRADE

-- S CONTINUED --	
SOL	SOLID SURFACE
STO	STONE
SPEC	SPECIFICATION(S)
SPKLR	SPRINKLER
SPKR	SPEAKER
SQ	SQUARE
SQIN	SQUARE INCH
SS	SERVICE SINK, SANITARY SEWER
SST	STAINLESS STEEL
ST	STREET, STAIN
STC	SOUND TRANSMISSION CLASS
STD	STANDARD
STL	STEEL
STOR	STORAGE
STRUCT	STRUCTURAL
SU	SOILED UTILITY
SUBFL	SUBFLOOR
SUSP	SUSPENDED
SW	SOUTHWEST, SWITCH
SYM	SYMMETRICAL
-- T --	
T	TREAD, TILE
T&B	TOP AND BOTTOM
TEL	TELEPHONE
TEMP	TEMPORARY, TEMPERATURE
TER	TERRAZZO
THK	THICK(NESS)
THRU	THROUGH
TI	TENANT IMPROVEMENT
TL	TOTAL LOAD
TMPD	TEMPERED
T&G	TONGUE AND GROOVE
TO	TOP OF
TOB	TOP OF BEAM
TOC	TOP OF CURB, TOP OF CONCRETE
TOF	TOP OF FOOTING, TOP OF FLOOR, TOP OF FRAME
TOS	TOP OF SLAB, TOP OF STEEL
TOW	TOP OF WALL
TR	TRANSITION STRIP
TS	TUBE STEEL
TV	TELEVISION
TX	TEXTILES
TYP	TYPICAL
-- U --	
UC	UNDERCOUNTER, UNDERCABINET, UNDERCUT
UGND	UNDERGROUND
UNO	UNLESS NOTED OTHERWISE
UP	UTILITY POLE
UTIL	UTILITY
-- V --	
V	VOLT(AGE)
VENT	VENTILATE, VENTILATION
VERT	VERTICAL
VEST	VESTIBULE
VIF	VERIFY IN FIELD
VTO	VENT TO OUTSIDE
VTR	VENT THROUGH ROOF
-- W --	
W	WASHING MACHINE, WEST, WIDE, WIDTH
W/	WITH
W/D	WASHER & DRYER
W/O	WITHOUT
WB	WALL BASE
WC	WATER CLOSET, WALL COVERING
WCO	WINDOW COVERING
WD	WOOD
WDP	WALL/ DOOR PROTECTION
WF	WIDE FLANGE
WH	WATER HEATER
WIC	WALK-IN CLOSET
WIN	WINDOW
WM	WIRE MOLD, WATER METER, WIRE MESH
WO	WALK-OFF FLOORING
WP	WORK POINT, WATERPROOFING, WEATHERPROOF
WPM	WATERPROOF MEMBRANE
WR	WATER REPELLENT, WATER RESISTANT
WRB	WATER RESISTANT BARRIER
WSCT	WAINSCOT
WT	WEIGHT
WWF	WELDED WIRE FABRIC
-- Y --	
YD	YARD, YARD DRAIN

SYMBOL LEGEND

--VIEW REFERENCE--

- 1 / A00.00 — BUILDING SECTION
- 1 / A00.00 — WALL SECTION, PARTIAL BUILDING SECTION
- 1 / A00.00 — DETAIL SECTION
- 1 / A00.00 — EXTERIOR ELEVATION
- 1 / A00.00 — INTERIOR ELEVATION
- 1 / A00.00 — ENLARGED PLAN, DETAIL PLAN

--LINE STYLES--

- BUILDING SETBACK LINE
- CENTERLINE
- CLEARANCE
- ELEMENT BEYOND
- HIDDEN ELEMENT
- MATCH LINE / SEE 1 / A00.01 — MATCH LINE
- OVERHEAD ELEMENT
- PROPERTY LINE

--TAGS--

- CEILING / HEIGHT — CEILING TAG
- 100A — DOOR TAG, CASED OPENING TAG
- FIN-1 — FINISH MATERIAL TAG
- F1 — FLOOR TAG
- EQP-1 — FURNITURE, FIXTURE, EQUIPMENT TAG
- GL-1 — GLAZING TAG
- 01 — KEYNOTE
- R1 — ROOF TAG
- ROOM NAME / 100 — ROOM TAG
- S1 — STOREFRONT TAG
- 01A — WALL TAG
- W1 — WINDOW TAG

--ANNOTATIONS--

- BREAK LINE
- LEVEL 1 / 0'-0" — ELEVATION LEVEL
- 0, 4', 8', 16' — GRAPHIC SCALE
- 1, A — GRID LINE
- PLAN NORTH / TRUE NORTH — NORTH ARROW
- 1 / REF — REVISION CLOUD W/ TAG
- 0" — SPOT ELEVATION

--CONSTRUCTION PHASE--

- EXISTING ELEMENT TO REMAIN
- DEMOLITION ELEMENT
- NEW CONSTRUCTION ELEMENT

--MATERIAL SYMBOLS & PATTERNS--

- ALUMINUM
- BATT INSULATION
- BLOCKING, SHIM
- CONCRETE
- CMU (PLAN VIEW)
- CONTINUOUS WOOD FRAMING
- EARTH BELOW GRADE
- GLASS (SECTION VIEW)
- GRAVEL
- GYPSUM WALL BOARD, GYPSUM SHEATHING
- OUT OF PROJECT SCOPE
- PLYWOOD
- RIGID INSULATION
- STEEL
- WOOD

1. DRAWINGS HAVE BEEN PREPARED ON AN ORIGINAL SHEET SIZE OF 24" X 36".
2. COMPLY WITH CODES, LAWS, ORDINANCES, RULES, AND REGULATIONS OF PUBLIC AUTHORITIES GOVERNING THE WORK.
3. REVIEW DOCUMENTS, VERIFY DIMENSIONS AND FIELD CONDITIONS AND CONFIRM THAT WORK IS BUILDABLE AS SHOWN. REPORT ANY CONFLICTS OR OMISSIONS TO THE ARCHITECT AND OWNER FOR CLARIFICATION PRIOR TO BIDDING OR PERFORMING ANY WORK IN QUESTION.
4. MAINTAIN WORK AREAS SECURE AND LOCKABLE DURING CONSTRUCTION. COORDINATE WITH OWNER TO ENSURE SECURITY.
5. DO NOT SCALE DRAWINGS. THE WRITTEN DIMENSIONS GOVERN. IN THE CASE OF A CONFLICT, NOTIFY THE ARCHITECT FOR CLARIFICATION.
6. PARTITIONS ARE DIMENSIONED FROM FACE OF STUD TO FACE OF STUD, UNLESS OTHERWISE NOTED. MAINTAIN DIMENSIONS MARKED "CLEAR". ALLOW FOR THICKNESS OF FINISHES.
7. COORDINATE AND PROVIDE BACKING FOR MILLWORK AND EQUIPMENT ITEMS AS ATTACHED, MOUNTED OR BRACED TO WALLS.
8. DOORS SHALL BE TRIMMED AT THRESHOLD TO PROVIDE 1/4" MIN., 3/4" MAX, CLEARANCE (U.O.N.) ABOVE FLOOR FINISH MATERIAL TO ALLOW FOR FULL DOOR SWING.
9. OPENING FORCE FOR INTERIOR SIDE-SWINGING DOORS WITHOUT CLOSERS SHALL NOT EXCEED A 5 POUND FORCE. FOR OTHER SIDE-SWINGING, SLIDING AND FOLDING DOORS, DOOR LATCH SHALL RELEASE WHEN SUBJECTED TO A 15 POUND FORCE APPLIED TO THE LATCH SIDE.
10. DRAWINGS ARE THE PROPERTY OF RICE FERGUS MILLER AND HAVE BEEN PREPARED FOR THE USE IN THE EXECUTION OF THE ENCLOSED PROJECT. USE OR REPRODUCTION FOR AN OTHER PURPOSE WITHOUT THE WRITTEN PERMISSION OF RICE FERGUS MILLER IS PROHIBITED.

DRAWING INDEX

SHEET #	SHEET NAME	BID SET
ARCHITECTURAL		
~~A00.01a~~	~~PROJECT INFORMATION, VICINITY MAP, PROJECT DESIGN TEAM~~	~~X~~
A00.01b	PROJECT INFORMATION, VICINITY MAP, PROJECT DESIGN TEAM	X
A00.02	DRAWING INDEX, GENERAL INFORMATION	X
A00.03	CODE SUMMARY & LIFE SAFETY PLAN	X
CIVIL		
1 OF 1	TOPOGRAPHIC SURVEY	X
C00.00	COVER SHEET	X
C00.01	LEGEND	X
C01.01	DEMOLITION & TESC	X
C01.02	TESC NOTES & DETAILS	X
C02.01	SITE PLAN	X
C03.01	GRADING & DRAINAGE PLAN	X
C03.02	UTILITY PLAN	X
C04.00	DETAILS	X
C04.01	DETAILS	X
C04.02	DETAILS	X
LANDSCAPE		
L01.01	LANDSCAPE PLAN	X
HAZMAT		
HA001	HAZMAT GENERAL NOTES & INFORMATION	X
HA101	HAZMAT GENERAL PLAN	X
HA102	HAZMAT IMPACTED MECHANICAL PLAN	X
HA103	HAZMAT IMPACTED ELECTRICAL PLAN	X
HA104	HAZMAT IMPACTED FOUNDATION PLAN	X
ARCHITECTURAL		
A02.01	AIR BARRIER	X
A03.01	ASSEMBLY TYPES	X
A10.01a	ARCHITECTURAL SITE PLAN	X
A20.01	DEMOLITION FLOOR & ROOF PLANS	X
A22.01	FLOOR PLAN	X
A24.01	REFLECTED CEILING PLAN	X
A25.01	ROOF PLAN	X
A31.01	EXTERIOR ELEVATIONS & BUILDING SECTIONS	X
A33.01	WALL SECTIONS	X
A34.01	INTERIOR ELEVATIONS, NOTES AND MOUNTING HEIGHTS	X
A34.02	INTERIOR ELEVATIONS	X
A50.01	EXTERIOR DETAILS	X
A50.02	EXTERIOR DETAILS	X
A50.03	EXTERIOR DETAILS	X
A60.01	DOOR SCHEDULE, FRAME TYPES, DETAILS, INTERIOR FINISH SCHEDULES, WINDOW SCHEDULE & DETAILS	X
A70.01	INTERIOR DETAILS	X
A73.01	CASEWORK DETAILS	X
STRUCTURAL		
S00.01	GENERAL STRUCTURAL NOTES	X
S00.02	GENERAL STRUCTURAL NOTES	X
S00.03	GENERAL STRUCTURAL NOTES	X
S00.04	SPECIAL INSPECTION SCHEDULES	X
S00.05	STRUCTURAL ABBREVIATIONS AND SYMBOLS	X
S22.01	FOUNDATION AND FIRST FLOOR PLAN	X
S22.02	LOW ROOF FRAMING PLAN	X
S23.01	PARTIAL FRAMINING PLAN AND DETAILS	X
S30.01	WALL ELEVATION	X
S50.01	TYPICAL CONCRETE DETAILS	X
S50.02	TYPICAL CONCRETE DETAILS	X
S50.61	TYPICAL WOOD DETAILS	X
S50.62	TYPICAL WOOD DETAILS	X
S50.63	TYPICAL WOOD DETAILS	X
S50.64	TYPICAL WOOD DETAILS	X
S50.65	TYPICAL WOOD DETAILS	X
MECHANICAL		
M00.01	COVER SHEET	X
M00.02	NOTES	X
M00.03	SCHEDULES	X
M00.04	SEQUENCE OF OPERATIONS	X
M20.01	DEMOLITION FLOOR PLAN	X
M22.01	FLOOR PLAN	X
M22.02	CEILING PLAN	X
M22.03	ROOF PLAN	X
M22.04	SECTIONS	X
M30.01	DETAILS	X
M30.02	DETAILS	X
M30.03	DETAILS	X
M30.04	DETAILS	X
PLUMBING		
P00.01	COVER SHEET	X
P00.02	SCHEDULES	X
P20.00	EXISTING FOUNDATION PLAN	X
P20.01	DEMOLITION FLOOR PLAN	X
P22.00	FOUNDATION PLAN	X
P22.01	FLOOR PLAN	X
P22.02	ROOF PLAN	X
P30.01	DETAILS	X
P30.02	DETAILS	X
ELECTRICAL		
E0.01	ELECTRICAL LEGEND, ABBREVIATION & NOTES	X
E0.02	LIGHTING FIXTURE SCHEDULE	X
E2.01	FIRST FLOOR LIGHTING PLAN	X
E3.01	FIRST FLOOR POWER PLAN	X
E4.01	FIRST FLOOR SYSTEMS PLAN	X
E5.01	EXISTING & REVISED ELECTRICAL ONE-LINE DIAGRAMS	X
E6.01	PANEL SCHEDULES	X
E6.02	PANEL SCHEDULES	X
E7.01	TELECOM DETAILS	X
E7.02	TELECOM DETAILS	X
ED2.01	FIRST FLOOR ELECTRICAL DEMOLITION PLAN	X
FIRE ALARM		
FA0.01	FIRE ALARM SYSTEM LEGEND AND NOTES	X
FA0.02	FIRE ALARM SYSTEM RISER AND SEQUENCE OF OPERATIONS MATRIX	X
FA1.01	FIRE ALARM SYSTEM - FIRST FLOOR	X
TOTAL NUMBER OF SHEETS: 90		

RICE fergus MILLER
ARCHITECTURE INTERIORS PLANNING VIZLAB
275 FIFTH STREET, SUITE 100
BREMERTON, WA 98337
360-377-8773
RFMARCH.COM

22020863
REGISTERED ARCHITECT
GUNNAR R. GLADICS
STATE OF WASHINGTON

STATION 57 ADDITION
GIG HARBOR FIRE AND MEDIC ONE
10521 CRESCENT VALLEY DR. NW
GIG HARBOR, WA 98332

PROJECT # 2022010.03

BID SET

ISSUE DATE JANUARY 8, 2024

REVISION SCHEDULE

AHJ APPROVAL STAMP

DRAWING INDEX, GENERAL INFORMATION

SHEET #
A00.02

APPLICABLE CODES

WASHINGTON STATE AMENDMENTS
2018 INTERNATIONAL ENERGY CONSERVATION CODE, COMMERCIAL (IECC)
2018 INTERNATIONAL BUILDING CODE (IBC)
2018 INTERNATIONAL EXISTING BUILDING CODE (IEBC)
2018 INTERNATIONAL MECHANICAL CODE (IMC)
2018 INTERNATIONAL FIRE CODE (IFC)
2018 UNIFORM PLUMBING CODE (UPC)
2018 INTERNATIONAL FUEL GAS CODE (IFGC)
2020 NATIONAL ELECTRICAL CODE (NEC)
2009 ICC A117.1 ACCESSIBILITY STANDARD

DEFERRED SUBMITTALS

FIRE SPRINKLER
FIRE ALARM

SEISMIC & RISK CATEGORY

SEISMIC ZONE D
RISK CATEGORY IV

FIRE DISTRICT

PIERCE COUNTY FIRE DISTRICT No. 5 (GIG HARBOR FIRE & MEDIC ONE)
10222 BUJACICH ROAD NW
GIG HARBOR, WA 98332

ZONING CODE SUMMARY

ALLOWABLE USE
R10, RURAL 10

LAND USE
MINOR AMENDMENT APPLICATION #1006347

SITE AREA
1.4 ACRES

BUILDING SETBACK REQUIREMENTS
FRONT - 25 FT MINIMUM
SIDE - 50 FT MINIMUM
REAR - 50 FT MINIMUM

PROPOSED BUILDING SETBACK
SEE SITE PLAN FOR MORE INFO

ALLOWABLE BUILDING HEIGHT
40 FT MAXIMUM

PROPOSED BUILDING HEIGHT
16 FT
SEE EXTERIOR ELEVATIONS FOR MORE INFO

PARKING REQUIREMENT
3 STALLS MINIMUM (1,170 sf / 400 sf = 2.9 stalls)

PROPOSED PARKING COUNT
SEE SITE PLAN FOR MORE INFO

IMPERVIOUS SITE AREA
SEE CIVIL C00.00

LANDSCAPE BUFFER REQUIREMENT
LANDSCAPE BUFFER L3 FROM PLAN EAST AND PLAN SOUTH, 20 FEET FROM LOT LINE

PROPOSED OPEN SPACE & LANDSCAPE AREA
SEE SITE PLAN FOR MORE INFO

BUILDING CODE SUMMARY

BUILDING USE
FIRE STATION

OCCUPANCY CLASSIFICATION AND USE (CHAPTER 3)
RESIDENTIAL - GROUP R-3 (SLEEP ROOM WITH PERMANENT OCCUPANTS),
LOW-HAZARD STORAGE - GROUP S-2 (OPERATIONAL STORAGE & SUPPORT SPACES),

ALLOWABLE BUILDING HEIGHT (TABLE 504.3)
GROUP R (MOST RESTRICTIVE), TYPE VB WITH SPRINKLER SYSTEM: 60 FT
PROPOSED ADDITION BUILDING HEIGHT: 16 FT
SEE BUILDING ELEVATIONS AND/OR SECTIONS FOR MORE INFO

ALLOWABLE NUMBER OF STORIES (TABLE 504.4)
GROUP R-3 (MOST RESTRICTIVE), TYPE VB WITH SPRINKLER SYSTEM: 4 STORIES
PROPOSED NUMBER OF STORIES: 1
SEE BUILDING ELEVATIONS AND/OR SECTIONS FOR MORE INFO

ALLOWABLE BUILDING AREA (TABLE 506.2)
GROUP R-3 (MOST RESTRICTIVE), TYPE VB WITH SPRINKLER SYSTEM: 21,000 SF
PROPOSED BUILDING AREA: PROPOSED ADDTION 890 SF (EXISTING BUILDING 4,121 SF), TOTAL: 5,011 SF
SEE SITE PLAN FOR MORE INFO

NON-SEPARATED OCCUPANCIES (508.3)
PROPOSED ADDTIONS ARE NON-SEPERATED UNDER PROVISIONS OF THIS SECTION.
EXCEPTION:
GROUP R-3.SLEEPING UNITS SHALL BE SEPERATED FROM OTHER SLEEPING UNITS AND OTHER OCCUPANCIES CONTIGUOUS TO THEM IN ACCORDANCE WITH THE REQUIREMENTS OF SECTION 420 and 708.3, EXCEPTION 2.

CONSTRUCTION TYPE (CHAPTER 6)
TYPE VB
SEE LIFE SAFETY PLAN AND/OR BUILDING SECTION FOR RATED ASSEMBLY LOCATIONS
SEE SITE PLAN FOR FIRE SEPARATION DISTANCE

FIRE RESISTANCE RATING REQUIREMENTS FOR BUILDING ELEMENT (TABLE 601)
PRIMARY STRUCTURAL FRAME: 0 HOURS
EXTERIOR BEARING WALLS: 0 HOURS
INTERIOR BEARING WALLS: 0 HOURS
NON-BEARING WALLS: 0 HOURS (PER TABLE 602)
FLOOR CONSTRUCTION: 0 HOURS
ROOF CONSTRUCTION: 0 HOURS

FIRE RESISTANCE RATING REQUIREMENTS FOR EXTERIOR WALLS (TABLE 602)
X ≥ 30 FT, TYPE VB, ALL OCCUPANCY GROUPS: 0 HOURS

FIRE AND SMOKE PROTECTION (CHAPTER 7)
AUTOMATIC NFPA 13 SPRINKLER SYSTEM PROVIDED THROUGHOUT BUILDING PER SECTION 903

SEE ASSEMBLY TYPES FOR RATED ASSEMBLIES

708.3 FIRE-RESISTANCE RATING (EXCEPTION)
CORRIDOR WALLS PERMITTED TO HAVE 1/2 HOUR FIRE RATING BY TABLE 1020.1

INTERIOR WALL AND CEILING FINISH REQUIREMENTS BY OCCUPANCY (TABLE 803.13)

OCCUPANT LOAD (SECTION 1004)
SEE LIFE SAFETY PLAN AND OCCUPANT LOAD CHART

MEANS OF EGRESS SIZING (SECTION 1005)
SEE LIFE SAFETY PLAN AND DOOR INFORMATION

NUMBER OF EXITS AND EXIT ACCESS DOORWAYS (SECTION 1006)
1 EXIT REQUIRED AT EACH ADDITION

EXIT ACCESS TRAVEL DISTANCE (SECTION 1017)
RESIDENTIAL - 250 FT (WITH SPRINKLER SYSTEM)
STORAGE - 400 FT (WITH SPRINKLER SYSTEM)

HALLWAY FIRE-RESISTANCE RATING (TABLE 1020.1)
RESIDENTIAL - 0.5 HOURS (WITH SPRINKLER SYSTEM)
STORAGE - 0 HOURS (WITH SPRINKLER SYSTEM)

ACCESSIBILITY (CHAPTER 11)
FOUR EXISTING SLEEPING UNITS PROVIDED: NO NEW WORK. PROVIDING ONE (1) NEW ACCESSIBLE SLEEP UNIT. FIVE TOTAL SLEEP UNITS

ENERGY CODE SUMMARY

COMMERCIAL ENERGY EFFICIENCY (CHAPTER 4)
BUILDING USE: FIRE STATION (CLIMATE ZONE: MARINE 4C)

OPAQUE THERMAL ENVELOPE INSULATION COMPONENT MINIMUM REQUIREMENTS, R-VALUE METHOD (TABLE C402.1.3)
ATTIC, AND OTHER: **R-49**
WALLS ABOVE GRADE, WOOD FRAMED: **R-25** STD (GROUP R), **R-21** INT (ALL OTHER)
SLAB-ON-GRADE FLOORS, UNHEATED SLABS: **R-10** FOR 24" BELOW
SEE ASSEMBLY TYPES FOR REQUIRED R-VALUE

OPAQUE THERMAL ENVELOPE INSULATION COMPONENT MINIMUM REQUIREMENTS, U-FACTOR METHOD (TABLE C402.1.4)
ATTIC, AND OTHER: **U-0.021**
WALLS ABOVE GRADE, WOOD FRAMED: **U-0.051** (GROUP R), **U-0.054** (ALL OTHER)
SLAB-ON-GRADE FLOORS, UNHEATED SLABS: **F-0.54**

BUILDING ENVELOPE FENESTRATION MAXIMUM U-FACTOR AND SHGC REQUIREMENTS (TABLE C402.4)
ENTRANCE DOORS: **U-0.60**
FIXED FENESTRATION: **U-0.38**
OPERABLE FENESTRATION: **U-0.45**
ALL FENESTRATION TO COMPLY WITH PRESCRIPTIVE MINIMUM SHGC VALUES PER TABLE C402.4

MAXIMUM AREA (SECTION C402.4.1)
TOTAL BUILDING FENESTRATION AREA SHALL NOT EXCEED 30% OF THE TOTAL BUILDING GROSS ABOVE-GRADE WALL AREA
SEE AIR BARRIER SHEET FOR PROPOSED WALL AREA

SPECIAL INSPECTIONS

NON-STRUCTURAL SPECIAL INSPECTIONS AND TESTS (CHAPTER 17) & WSEC STATEMENT OF SPECIAL INSPECTIONS FOR GENERAL TRADES, MECHANICAL, AND ELECTRICAL SYSTEMS
1. SPECIAL INSPECTIONS SHALL BE PROVIDED PER THE REQUIREMENTS OF THE IBC AND REFERENCED STANDARDS.
2. REFER TO STRUCTURAL DRAWINGS FOR SPECIAL INSPECTION REQUIREMENTS OF STRUCTURAL SYSTEMS.
3. TESTING AND SPECIAL INSPECTION REPORTS PREPARED BY THE SPECIAL INSPECTOR SHALL BE SUBMITTED TO THE BUILDING OFFICIAL, ARCHITECT, ENGINEER, AND OWNER ON A DAILY BASIS WHENEVER TESTING OR SPECIAL INSPECTIONS ARE PERFORMED.

SPECIAL INSPECTIONS AND TESTS

APPLICABLE TO PROJECT (Y/N)	SYSTEM	REFERENCE 2018 IBC, UNO	VERIFICATION AND INSPECTION	INSPECTION METHODS			NOTES AND EXCEPTIONS	TYPICAL DIVISIONS
				CONTINUOUS	TESTING	PERIODIC		
Y	FIRE-RESISTANT PENETRATIONS AND JOINTS	1705.17	INSPECTION	NO	NO	YES	REQUIRED FOR: 1. HIGH-RISE CONSTRUCTION (REFERENCE SECTION 403) 2. BUILDINGS OF RISK CATEGORY III OR IV PER TABLE 1604.5	07
Y	SUSPENDED CEILING GRIDS	ASCE 7-10 11.A.1.3.9 (2)	INSTALLATION	NO	NO	YES	APPLICABLE FOR SEISMIC ZONE D, E OR F.	09

GROSS BUILDING AREA

LEVEL	OCCUPANCY CLASSIFICATION	AREA
LEVEL 1	S-2	671 SF
LEVEL 1	R-3	413 SF
LEVEL 1	Existing Fire Station	3,705 SF
BUILDING TOTAL		4,790 SF

OCCUPANT LOAD CHART BY ROOM

ROOM INFORMATION			OCCUPANCY	IBC 2018 TABLE 1004.5 MAXIMUM FLOOR AREA ALLOWANCES PER OCCUPANT			OCCUPANT
NUMBER	NAME	AREA	CLASSIFICATION	FUNCTION OF SPACE	LOAD FACTOR	GROSS/ NET	LOAD
133	FITNESS ROOM	293 SF	R-3	EXERCISE ROOMS	50 SF	GROSS	6
136	SR 5	120 SF	R-3	RESIDENTIAL	200 SF	GROSS	1
137	BUNKER GEAR STORAGE	293 SF	S-2	ACCESSORY STORAGE AREAS, MECHANICAL EQUIPMENT ROOM	300 SF	GROSS	1
138	TOTE / STORAGE	110 SF	S-2	ACCESSORY STORAGE AREAS, MECHANICAL EQUIPMENT ROOM	300 SF	GROSS	1
139	STAFF CHECK IN	91 SF	S-2	ACCESSORY STORAGE AREAS, MECHANICAL EQUIPMENT ROOM	300 SF	GROSS	1
140	DECON	177 SF	S-2	ACCESSORY STORAGE AREAS, MECHANICAL EQUIPMENT ROOM	300 SF	GROSS	1
LEVEL 1		1083 SF					11
TOTAL		1083 SF					11

NOTES & LEGEND - LIFE SAFETY PLAN

1. PROVIDE EXIT SIGNAGE PER 2018 IBC 1009.9, 1009.10, 1009.11, AND 1013.
2. PROVIDE MEANS OF EGRESS ILLUMINATION PER 2018 IBC 1008.
3. RATED WALLS MAY BE LABELED ONLY AS NEEDED FOR CLARITY.

45 MIN — FIRE RATED DOOR
00.00" / 00.00" — MEANS OF EGRESS CAPACITY
WIDTH PROVIDED
WIDTH REQUIRED
FP 1/2 HR — FIRE PARTITION, 0.5 HOUR
ROOM NAME / ### / [#] — *ROOM NUMBER*, *OCCUPANTS*
EXIT SIGN
FIRE EXTINGUISHER
EGRESS PATH
123 — EXIT ACCESS OCCUPANT LOAD
123 — EXIT DISCHARGE OCCUPANT LOAD

ROOMS BY FUNCTION OF SPACE
- ACCESSORY STORAGE AREAS, MECHANICAL EQUIPMENT ROOM
- BUSINESS AREAS
- EXERCISE ROOMS
- PARKING GARAGES
- RESIDENTIAL

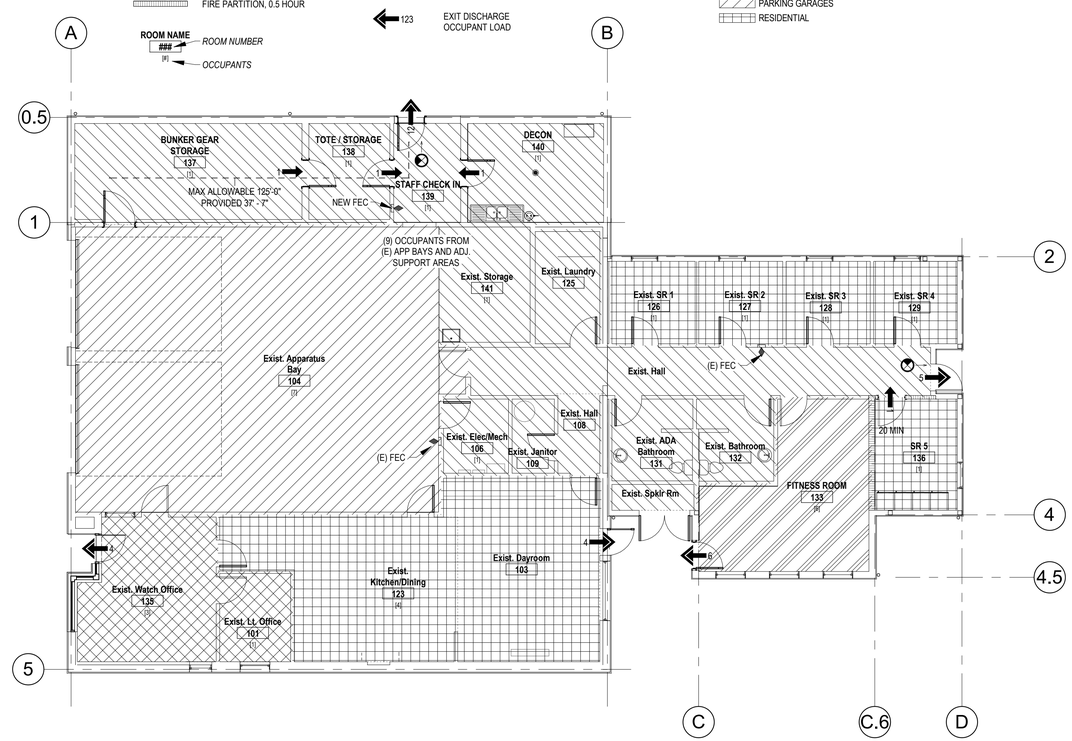

10 LIFE SAFETY PLAN
1/8" = 1'-0"

RICE fergus MILLER
ARCHITECTURE INTERIORS PLANNING VIZLAB
275 FIFTH STREET, SUITE 100
BREMERTON, WA 98337
360-377-8773
RFMARCH.COM

22020863
REGISTERED ARCHITECT
GUNNAR R. GLADICS
STATE OF WASHINGTON

STATION 57 ADDITION
GIG HARBOR FIRE AND MEDIC ONE
10521 CRESCENT VALLEY DR. NW
GIG HARBOR, WA 98332

PROJECT # 2022010.03
BID SET
ISSUE DATE JANUARY 8, 2024

REVISION SCHEDULE

AHJ APPROVAL STAMP

CODE SUMMARY & LIFE SAFETY PLAN

SHEET #
A00.03

LEGEND:

SET IRON ROD W/CAP	CATCH BASIN SQUARE
SET P/K NAIL	STORM CULVERT
SET HUB & TACK	STORM CLEANOUT
SET R/R SPIKE	ROOF DRAIN
BUILDING HATCH	SANITARY CLEANOUT
CONCRETE HATCH	WATER VALVE
ASPHALT HATCH	WATER METER
	FIRE HYDRANT
BUILDING-FOOTPRINT	FIRE DEPARTMENT CONNECT
BOUNDARY-CENTERLINE	HOSE BIB
BOUNDARY-RIGHT-OF-WAY	UTILITY POLE W/ UTILITY DROP
BOUNDARY-EASEMENT	ELECTRIC METER
PAVEMENT-ASPHALT	ELECTRIC TRANSFORMER
ELECTRICAL (OH)	TELEPHONE CABINET
BOUNDARY	FENCE POST
CONTOUR-MAJOR	BOLLARD
CONTOUR-MINOR	MAIL BOX
CURB-VERTICAL	SIGN
FENCE-CYCLONE	TREE-CONIFER
FENCE-WOOD	TREE-DECIDUOUS
GROUND-TOP	
GROUND-TOE	
LANDSCAPE	IRRIGATION CONTROL VALVE
PAVEMENT-CONCRETE	SPRINKLER CONTROL VALVE
PAVEMENT-CONCRETE-FLOWLINE	
PAVEMENT-GRAVEL	HANDICAP PARKING
PAVEMENT-CENTERLINE	
STRIPING	
STORM SEWER	
WATER	
WALL-TOP	
WALL-TOE	

N

SCALE: 1" = 20'

10-12-2023

SAMANTHA R. BIANCO
STATE OF WASHINGTON
44334
REGISTERED PROFESSIONAL LAND SURVEYOR

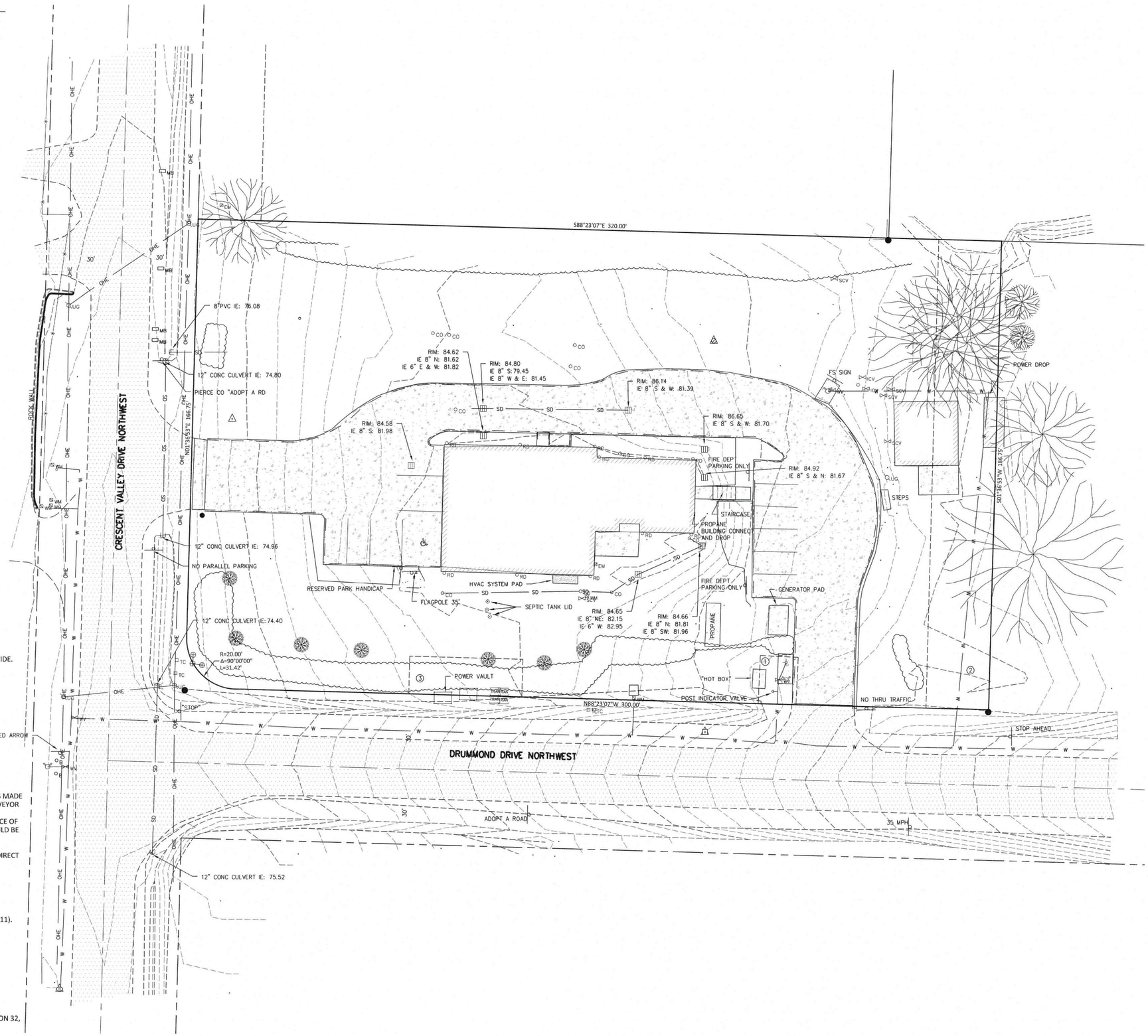

EASEMENTS

1. WATER EASEMENT PER AFN: 201112130669. WIDTH NOT STATED, SHOWN AS 15' WIDE.
2. WATER EASEMENT PER AFN: 8901230302. AFFECTS EASTERLY 25' OF PROPERTY.
3. ELECTRIC AND CABLE TV EASEMENT PER AFN: 201510130262.

NOTES

1.) THE LOCATION OF EXISTING UTILITY FACILITIES HAS NOT BEEN RESEARCHED. UNDERGROUND UTILITIES SHOWN HEREON ARE FROM "UTILITY LOCATE" PAINT MARKS MADE IN RESPONSE TO LOCATE REQUEST TICKET NO. 23077645 AND NO. 23077664. THE SURVEYOR ASSUMES NO RESPONSIBILITY FOR THE ACCURACY OF THE DELINEATION OF SUCH UNDERGROUND UTILITIES BY THE RESPECTIVE UTILITY OWNERS, NOR FOR THE EXISTENCE OF BURIED OBJECTS WHICH ARE NOT SHOWN ON THE PLAN. ALL UTILITY LOCATIONS SHOULD BE FIELD VERIFIED PRIOR TO CONSTRUCTION.

2.) THIS SURVEY WAS PERFORMED MARCH 8 THROUGH MARCH 20, 2023 UNDER MY DIRECT SUPERVISION.

HORIZONTAL DATUM

THE WASHINGTON STATE PLANE COORDINATE SYSTEM, (SOUTH ZONE 4602) NAD83(2011).

VERTICAL DATUM

THE ELEVATIONS SHOWN ON THIS MAP ARE NAVD88 DATUM.

LEGAL DESCRIPTION

LOT 1, PIERCE COUNTY SHORT PLAT NO. 76-674 LOCATED IN THE SW 1/4 NE 1/4 SECTION 32, T.22 N., R. 2 E., W.M., GIG HARBOR, PIERCE COUNTY, WASHINGTON.

FILE: J:\18017 - GHFMO STATION 57\600 SURVEY\602 DWG\(DATUM ADJUSTED SURFACE) 18017 TP 1.DWG 10/12/2023 8:41 AM

MacKay Sposito
ENERGY PUBLIC WORKS LAND DEVELOPMENT
www.mackaysposito.com

GHFMO STATION 57
GIG HARBOR, PIERCE COUNTY, WA

TOPOGRAPHIC SURVEY

REVISIONS:

JOB NO.:	18017
DATE:	01/08/2024
SCALE:	AS SHOWN
DESIGNED BY:	
DRAWN BY:	NPR
CHECKED BY:	

NO. 1 OF 1

STATION 57 - GIG HARBOR FIRE AND MEDIC ONE

SECTION 32, TOWNSHIP 22 NORTH, RANGE 2 EAST OF THE W.M.
IN PIERCE COUNTY, WASHINGTON

PRIVATE IMPROVEMENTS — 1011485 PERMIT #

DEVELOPMENT ENGINEER — DATE

PIERCE COUNTY ORDINANCE NOs: STORM 2021-45 ROAD

1. A PRE-CONSTRUCTION MEETING SHALL BE REQUESTED AT LEAST 48-HOURS IN ADVANCE OF THE START OF CONSTRUCTION. CONTACT LARRY FREMONT, THE AREA INSPECTOR, AT 253-798- 7187.
2. APPOINT A CERTIFIED EROSION AND SEDIMENT CONTROL LEAD WHO SHALL BE PROVIDED A COPY OF THE SWPPP, EROSION CONTROL PLAN & INSPECTION SCHEDULE.
3. FAILURE TO OBTAIN REQUIRED INSPECTIONS MAY ENDANGER OR DELAY PROJECT APPROVAL.
4. ALL WORK IN THE PUBLIC RIGHT-OF-WAY REQUIRES A GENERAL RIGHT-OF-WAY PERMIT FROM PIERCE COUNTY PLANNING AND PUBLIC WORKS.

RICE fergus MILLER
ARCHITECTURE INTERIORS PLANNING VIZLAB
275 FIFTH STREET, SUITE 100
BREMERTON, WA 98337
360-377-8773
RFMARCH.COM

MacKay Sposito
ENERGY PUBLIC WORKS LAND DEVELOPMENT
www.mackaysposito.com

VICINITY MAP
1" = 1 MILE

OWNER / DEVELOPER

GIG HARBOR FIRE & MEDIC ONE
PIERCE COUNTY FIRE DISTRICT 5
DENNIS DOAN, FIRE CHIEF
JOHN JOHNSON, OWNER'S REP
10222 BUJACICH RD NW
GIG HARBOR, WA 98332-8595
253-851-3111

ARCHITECT

RICE FERGUS MILLER
HOWARD STRUVE
275 5TH ST, SUITE 100
BREMERTON, WA 98337
(360) 377-8773

CIVIL ENGINEER

MacKay Sposito
ERIC PILCHER, PE
33810 WEYERHAEUSER WAY SOUTH, SUITE 130
FEDERAL WAY, WA 98001
PHONE (253) 205-8700
www.mackaysposito.com

SURVEYOR

MacKay Sposito
SAMANTHA BIANCO, PLS
33810 WEYERHAEUSER WAY SOUTH, SUITE 130
FEDERAL WAY, WA 98001
PHONE (253) 205-8700
www.mackaysposito.com

SHEET INDEX

		PLAN CHANGE
1 OF 1	TOPOGRAPHIC SURVEY	N/A
C00.00	COVER SHEET	N/A
C00.01	LEGEND	N/A
C01.01	DEMOLITION & TESC	N/A
C01.02	TESC NOTES & DETAILS	N/A
C02.01	SITE PLAN	N/A
C03.01	GRADING PLAN	N/A
C03.02	UTILITY PLAN	N/A
C04.01	DETAILS	N/A
C04.02	DETAILS	N/A
L01.01	LANDSCAPE PLAN	N/A

ERIC L. PILCHER — STATE OF WASHINGTON — 43952 — REGISTERED PROFESSIONAL ENGINEER — 10/12/2023

ZONING

RURAL SENSITIVE RESOURCE; GIG HARBOR COMMUNITY PLAN

EARTHWORK QUANTITIES

CUT: 120 CY
FILL: 35 CY
NET: 85 CY (EXPORT)

DISTURBED AREA: 0.20 AC

NOTE: THESE QUANTITIES ASSUME NO STRIPPING, HAVE NOT BEEN ADJUSTED FOR PAVEMENTS, UTILITIES, OR FOUNDATIONS, AND ARE FOR PERMIT PURPOSES ONLY. CONTRACTOR SHALL DETERMINE HIS/HER OWN EARTHWORK QUANTITIES.

SITE DATA

PARCEL AREA	1.27 AC	
DISTURBED AREA	0.20 AC	
	EXISTING	PROPOSED
IMPERVIOUS AREAS	0.40 AC	0.48 AC
-PGIS	0.26 AC	0.29 AC
-NPGIS	0.14 AC	0.19 AC
PERVIOUS AREAS (NPGPS)	0.87 AC	0.79 AC

PGIS POLLUTION GENERATING IMPERVIOUS SURFACE
NPGIS NON POLLUTION GENERATING IMPERVIOUS SURFACE
PGPS POLLUTION GENERATING PERVIOUS SURFACE
NPGPS NON POLLUTION GENERATING PERVIOUS SURFACE

PARKING SPACES

	EXISTING	PROPOSED
STANDARD PARKING	9	15
ADA PARKING	1	1
TOTAL PARKING	10	16

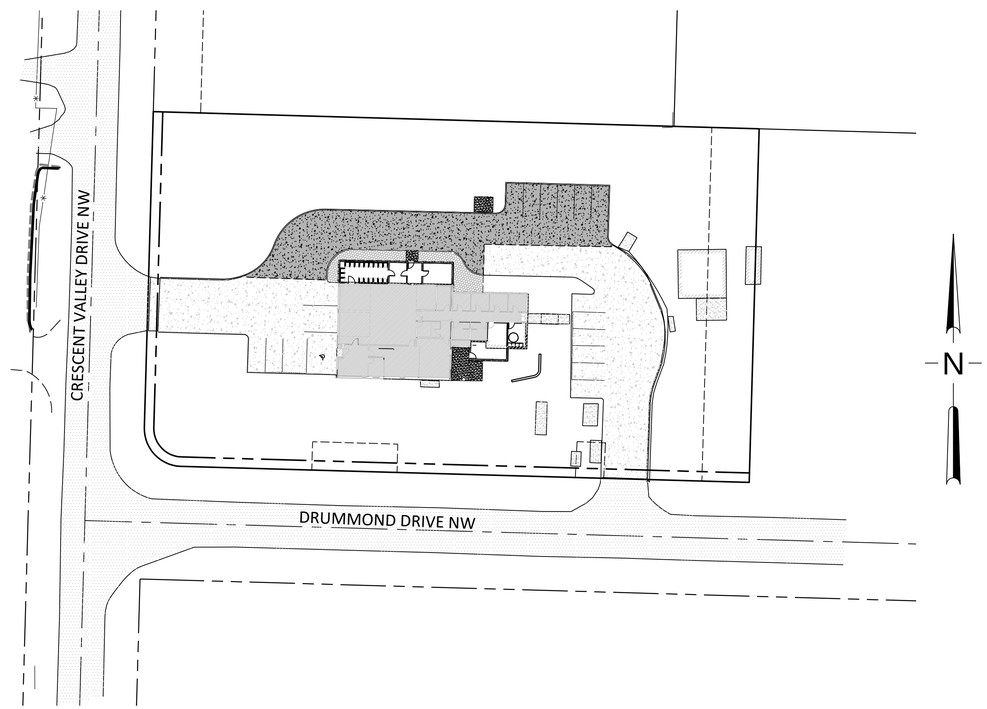

SITE MAP
SCALE: 1" = 40'

SITE ADDRESS

10521 CRESCENT VALLEY DR NW, GIG HARBOR, WA 98332

PARCEL NUMBER

0222325001

HORIZONTAL DATUM

THE WASHINGTON STATE PLANE COORDINATE SYSTEM, (SOUTH ZONE 4602) NAD83(2011)

VERTICAL DATUM

THE ELEVATIONS SHOWN ON THIS MAP ARE NAVD88 DATUM

LEGAL DESCRIPTIONS

LOT 1, PIERCE COUNTY SHORT PLAT NO. 76-674 LOCATED IN THE SW 1/4 NE 1/4 SECTION 32, T.22 N., R. 2 E., W.M., GIG HARBOR, PIERCE COUNTY, WASHINGTON.

CALL 2 BUSINESS DAYS BEFORE YOU DIG
811
"It's the Law"
www.callbeforeyoudig.com

STATION 57 ADDITION
GIG HARBOR FIRE AND MEDIC ONE
GIG HARBOR, WASHINGTON

PROJECT # 2022010.03
BID SET
ISSUE DATE JANUARY 8, 2024
REVISION SCHEDULE

COVER SHEET

SHEET #
C00.00

DATE/TIME PRINTED: 10/12/2023 1:34 PM
J:\18017 - GHFMO Station 57\500 Design\502 Drawings\Sheets\18017 - C00.00 Cover Sheet.dwg

PRIVATE IMPROVEMENTS

1011485
PERMIT #

DEVELOPMENT ENGINEER _____ DATE _____

PIERCE COUNTY ORDINANCE NOs: STORM 2021-45 ROAD _____

1. A PRE-CONSTRUCTION MEETING SHALL BE REQUESTED AT LEAST 48-HOURS IN ADVANCE OF THE START OF CONSTRUCTION. CONTACT LARRY FREMONT, THE AREA INSPECTOR, AT 253-798- 7187.
2. APPOINT A CERTIFIED EROSION AND SEDIMENT CONTROL LEAD WHO SHALL BE PROVIDED A COPY OF THE SWPPP, EROSION CONTROL PLAN & INSPECTION SCHEDULE.
3. FAILURE TO OBTAIN REQUIRED INSPECTIONS MAY ENDANGER OR DELAY PROJECT APPROVAL.
4. ALL WORK IN THE PUBLIC RIGHT-OF-WAY REQUIRES A GENERAL RIGHT-OF-WAY PERMIT FROM PIERCE COUNTY PLANNING AND PUBLIC WORKS.

LINETYPES

EXISTING	PROPOSED	FUTURE	DESCRIPTION
REFERENCE LINETYPES			
			BOUNDARY
			PROPERTY LINES
			EASEMENT
			RIGHT OF WAY
			CENTER LINE
			PHASE LINE
1+00	1+00	1+00	CENTER LINE STATION TEXT
FEATURE LINETYPES			
			CURB
			CURB & GUTTER
			SIDEWALK
			PAVED ROAD
			GRAVEL ROAD
			DRIVE/PARKING
			BARBWIRE FENCE
			WOOD FENCE
			CYCLONE FENCE
			MISC FENCE
			TREELINE
			RAILROAD
			BUILDINGS
			RETAINING WALL
			CLEARING AND GRUBBING
			SAWCUT LINE
			FLOWLINE
			SETBACK LINE
			EDGE OF WETLAND
			WETLAND BUFFER
UTILITIES			
W	W	W	WATER LINE
W			WATER SERVICE LINE
SS	SS	SS	SANITARY SEWER MAIN
			SANITARY SEWER LATERAL
FM FM	FM FM	FM FM	PRESSURE SEWER
SD	SD	SD	STORM SEWER MAIN
SD			STORM SEWER LATERAL
>	>	>	STORM SWALE
			ROOF DRAIN
IRR	IRR	IRR	IRRIGATION LINE
OHE	OHE	OHE	OVERHEAD ELECTRIC
UGE	UGE	UGE	UNDERGROUND ELECTRIC
T	T	T	TELEPHONE
G	G	G	GAS
TV	TV	TV	CABLE TV
COMM		COMM	COMMUNICATION
FO	FO	FO	FIBER OPTIC CONDUIT
TS	TS	TS	TRAFFIC SIGNAL CONDUIT

SYMBOLS

EXIST	PROP	FUTURE	DESCRIPTION
WATER			
			FIRE HYDRANT
WM			DOMESTIC WATER METER
WM			COMMERCIAL WATER METER
			DOUBLE CHECK VALVE
			BLOW-OFF
WV			WATER VALVE
			THRUST BLOCK
			CROSS
			TEE
			REDUCER
			WATER STUB
W	W	W	WELL
			FIRE DEPT. CONNECTION
HB			HOSE BIB
STORM SEWER			
D			STORM MANHOLE
DW			STORM DRYWELL
CO			STORM CLEANOUT
			TYPE 1 CATCH BASIN
D			TYPE 2 CATCH BASIN
			COMBINATION CURB INLET
			AREA DRAIN
			STORM CULVERT (OUTLET)
RD			ROOF DRAIN
			STORM STUB
			INFILTRATION TRENCH
SANITARY SEWER			
S			SANITARY MANHOLE
CO			SANITARY CLEANOUT
			SANITARY STUB
			SANITARY LATERAL
IRRIGATION			
ICV			IRRIGATION CONTROL VALVE
			SPRINKLER HEAD
SV			SPRINKLER VALVE
SCV			SPRINKLER CONTROL VALVE
SM			SPRINKLER MANIFOLD
			FOUNTAIN

EXIST	PROP	DESCRIPTION
POWER		
		POWER POLE
		GUY WIRE ANCHOR
EJB		ELECTRIC BOX
ESJB		ELECTRIC BOX (HOUSE)
		YARD LIGHT
TRAN		TRANSFORMER
TELEPHONE		
		TELEPHONE BOOTH
TP		TELEPHONE PEDESTAL
TC		TELEPHONE CABINET
GAS		
GF		GAS FINK
GV		GAS VALVE
GM		GAS METER
GLR		GAS LOCATE RISER
GVNT		GAS VENT
		GAS MARKER
COMMUNICATION		
C		COMMUNICATION MANHOLE
TRAFFIC		
		TRAFFIC CONTROL ARM
TSCB		TRAFFIC SIGNAL CONTROL BOX
TSJB		TRAFFIC SIGNAL J- BOX (UG)
PSP		TRAFFIC PEDESTRIAN SIGNAL
TELEVISION		
JB		TV J-BOX
SB		TV SERVICE BOX
EROSION CONTOL		
		GRAVEL CONSTRUCTION ENTRANCE
		TEMPORARY STORM INLET PROTECTION
		SILT FENCE

EXIST	PROP	DESCRIPTION
SURFACE / LANDSCAPING		
B		BOLLARD
FP		FLAG
		GATE POST
MB		MAILBOX
MW		MONITORING WELL
TP		TEST PIT
		SIGN
		BARRICADE
		FLOW ARROW
		SLOPE ARROW
		TURN DIRECTIONS
		ADA SYMBOL
		TREE (CONIFEROUS)
		TREE (DECIDUOUS)
		TREE (ORNAMENTAL)
		TREE (CLUMP)
		TREE (STUMP)
		ORNAMENTAL SHRUB
		TREE REMOVAL
		TREE PROTECTION
CONTOURS		
121		EXISTING GRADE CONTOURS (MINOR)
120		EXISTING GRADE CONTOURS (MAJOR)
FG 121		FINISHED GRADE CONTOURS (MINOR)
FG 120		FINISHED GRADE CONTOURS (MAJOR)

EXIST	PROP	DESCRIPTION
SHADING / HATCHING		
		CONCRETE SIDEWALK
		RIPRAP
		AC / SIDEWALK REMOVAL
		LANDSCAPING
		PERVIOUS CONCRETE PAVEMENT
NOTE BUBBLES		
#		WATER NOTE
#		SANITARY NOTE
#		STORM , GRADING, EROSION NOTE
#		DRY UTILITY, SITE, DEMOLITION NOTE
#		AS-BUILT NOTE
#		REVISION NOTE

ABBREVIATIONS

&	AND
@	AT
℄, CL	CENTERLINE
⅊, PL	PROPERTY LINE
%	PERCENT
#	NUMBER
AC	ASPHALTIC CONCRETE
AD	AREA DRAIN
ALT	ALTERNATE
APPROX	APPROXIMATELY
ARVA	AIR RELEASE VALVE
ASSY	ASSEMBLY
BOC	BACK OF CURB
BLDG	BUILDING
BO	BLOW OFF
BOT	BOTTOM
BVC	BEGIN VERTICAL CURVE
BW	BOTTOM OF WALL
CB	CATCH BASIN
CF	CUBIC FEET
CCI	COMBINATION CURB INLET
CI	CURB INLET
CMP	CORRUGATED METAL PIPE
CMU	CONCRETE MASONRY PIPE
CO	CLEANOUT
CONC	CONCRETE
CONST	CONSTRUCTION
CONT	CONTINUOUS
CR	CURB RETURN
CY	CUBIC YARDS
DCVA	DOUBLE CHECK VALVE ASSEMBLY
DET	DETAIL
DI	DITCH INLET
DIA	DIAMETER
DIM	DIMENSION
DIP	DUCTILE IRON PIPE
DW	DRY WELL
D/W	DRIVEWAY
E	EAST
EA	EACH
EJ	EXPANSION JOINT
EL, ELEV	ELEVATION
EP	EDGE OF PAVEMENT
EQ	EQUAL
ER	END OF RETURN
ESMT	EASEMENT
EVC	END VERTICAL CURVE
EX, EXIST	EXISTING
FDC	FIRE DEPARTMENT CONNECTION
FF	FINISH FLOOR ELEVATION
FG	FINISHED GRADE
FH	FIRE HYDRANT
FL	FLOW LINE
FLG	FLANGE
FO	FIBEROPTIC
FOC	FACE OF CURB
FM	FORCE MAIN
FT	FOOT OR FEET
JT	JOINT
LAT	LATERAL
LF	LINEAR FEET
LP	LOW POINT
LT	LEFT
MAX	MAXIMUM
MH	MANHOLE
MJ	MECHANICAL JOINT
MIN	MINIMUM
GA	GAUGE
GALV	GALVANIZED
GV	GATE VALVE
HB	HOSE BIB
HORIZ	HORIZONTAL
HP	HIGH POINT
ID	INSIDE DIAMETER
IE	INVERT ELEVATION
IN	INCHES
MISC	MISCELLANEOUS
N	NORTH
NO.	NUMBER
NTS	NOT TO SCALE
OC	ON CENTER
OD	OUTSIDE DIAMETER
PC	POINT OF CURVATURE
PERF	PERFORATED
PI	POINT OF INTERSECTION
P.P.	PERFORATED PIPE
PRC	POINT OF REVERSE CURVE
PT	POINT OF TANGENCY
PUE	PUBLIC UTILITY EASEMENT
PUD	POWER
PVC	POLYVINYL CHLORIDE PIPE
R, RAD	RADIUS
RIM	RIM ELEVATION
REQD	REQUIRED
ROW, R/W	RIGHT OF WAY
RT	RIGHT
S	SOUTH, SLOPE
SAN	SANITARY SEWER
SF	SQUARE FEET
SHT	SHEET
SPECS	SPECIFICATIONS
SQ	SQUARE
STA	STATION
STD	STANDARD
STM	STORM SEWER
TB	THRUST BLOCK
TC	TOP OF CURB OR TOP OF CONCRETE
TEL	TELEPHONE
TOG	TOP OF GRATE
TS	TRAFFIC SIGNAL CONDUIT
TSFO	TRAFFIC SIGNAL CONDUIT FIBEROPTIC
TV	CABLE TELEVISION
TW	TOP OF WALL
TYP	TYPICAL
VC	VERTICAL CURVE
VERT	VERTICAL
W	WEST
W/	WITH

CALL
2 BUSINESS DAYS
BEFORE YOU DIG
811
"It's the Law"
www.callbeforeyoudig.com

RICE fergus MILLER
ARCHITECTURE INTERIORS PLANNING VIZLAB
275 FIFTH STREET, SUITE 100
BREMERTON, WA 98337
360-377-8773
RFMARCH.COM

MacKay Sposito
ENERGY PUBLIC WORKS LAND DEVELOPMENT
www.mackaysposito.com

STATION 57 ADDITION
GIG HARBOR FIRE AND MEDIC ONE

GIG HARBOR, WASHINGTON

PROJECT # 2022010.03

BID SET

ISSUE DATE JANUARY 8, 2024

REVISION SCHEDULE

LEGEND

SHEET #
C00.01

DATE/TIME PRINTED: 10/12/2023 7:09 AM
J:\18017 - GHFMO Station 57\500 Design\502 Drawings\Sheets\18017 - C00.01 Legend.dwg

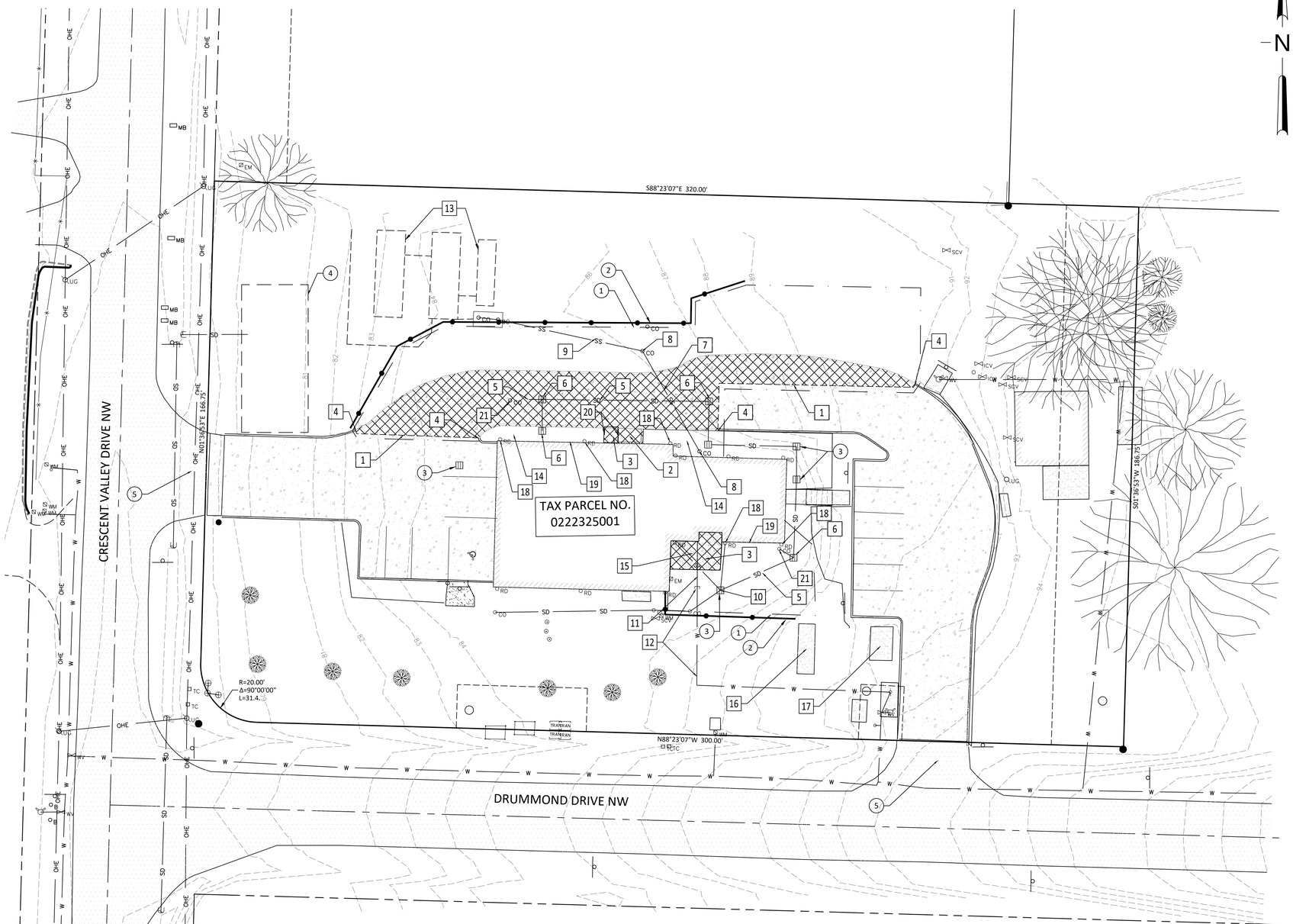

PRIVATE IMPROVEMENTS

1011485
PERMIT #

DEVELOPMENT ENGINEER

DATE

PIERCE COUNTY ORDINANCE NOs: STORM 2021-45 ROAD

1. A PRE-CONSTRUCTION MEETING SHALL BE REQUESTED AT LEAST 48-HOURS IN ADVANCE OF THE START OF CONSTRUCTION. CONTACT LARRY FREMONT, THE AREA INSPECTOR, AT 253-798- 7187.
2. APPOINT A CERTIFIED EROSION AND SEDIMENT CONTROL LEAD WHO SHALL BE PROVIDED A COPY OF THE SWPPP, EROSION CONTROL PLAN & INSPECTION SCHEDULE.
3. FAILURE TO OBTAIN REQUIRED INSPECTIONS MAY ENDANGER OR DELAY PROJECT APPROVAL.
4. ALL WORK IN THE PUBLIC RIGHT-OF-WAY REQUIRES A GENERAL RIGHT-OF-WAY PERMIT FROM PIERCE COUNTY PLANNING AND PUBLIC WORKS.

N

0 20 40
SCALE: 1" = 20'

EROSION CONTROL KEY NOTES

1. LIMIT OF DISTURBANCE
2. SILT FENCE, SEE DETAIL 3, SHEET C01.02
3. INLET PROTECTION, SEE DETAIL 4, SHEET C01.02
4. STOCKPILE AREA. PROVIDE WATTLES, SANDBAGS, OR SIMILAR PERIMETER PROTECTION AND COVERAGE AS NECESSARY.
5. PROVIDE STREET SWEEPING AS NECESSARY TO PREVENT SEDIMENT FROM TRACKING INTO RIGHT-OF-WAY.

NOTE:
DO NOT STOCKPILE LOOSE MATERIAL SUCH AS SOIL, SAND, AGGREGATE, TOPSOIL, ETC. DIRECTLY ON TOP OF EXISTING POROUS CONCRETE. SMALL QUANTITIES MAY BE PLACED ON EXISTING SURFACE IF PLASTIC SHEETING IS PROVIDED. PROMPLTY REMOVE ANY SOIL OR OTHER LOOSE MATERIAL SPILLED ONTO POROUS CONCRETE SURFACE.

DEMOLITION KEY NOTES

1. SAWCUT EXISTING PAVEMENT
2. REMOVE & DISPOSE CHAIN LINK FENCE TRASH ENCLOSURE
3. DEMOLISH & DISPOSE CONCRETE SIDEWALK
4. DEMOLISH EXISTING CURB
5. REMOVE & DISPOSE EXISTING STORM PIPE
6. REMOVE & DISPOSE EXISTING CATCHBASIN
7. REMOVE & DISPOSE EXISTING SANITARY PIPE
8. PRESERVE & PROTECT EXISTING SANITARY CLEANOUT
9. PRESERVE & PROTECT EXISTING SANITARY PIPE
10. PRESERVE & PROTECT EXISTING CATCHBASIN
11. REMOVE & DISPOSE EXISTING FIRE SERVICE LINE
12. PRESERVE & PROTECT EXISTING FIRE SERVICE LINE
13. EXISTING SEPTIC SYSTEM APPROX. LOCATION; PRESERVE & PROTECT
14. SALVAGE AND REUSE EXISTING COBBLES (TYP.)
15. SALVAGE AND RELOCATE EXISTING PICNIC TABLE. SEE ARCH.
16. PRESERVE & PROTECT PROPANE TANK
17. PRESERVE & PROTECT GENERATOR
18. REMOVE AND DISPOSE DOWNSPOUT
19. DEMOLISH AND RE-ROUTE FOUNDATION DRAIN AROUND NEW BUILDING ADDITION
20. SALVAGE EXISTING HANDRAILS FOR USE AT STATION 53
21. REMOVE AND DISPOSE CLEANOUT

CALL
2 BUSINESS DAYS
BEFORE YOU DIG
811
"It's the Law"
www.callbeforeyoudig.com

RICE fergus MILLER
ARCHITECTURE INTERIORS PLANNING VIZLAB
275 FIFTH STREET, SUITE 100
BREMERTON, WA 98337
360-377-8773
RFMARCH.COM

MacKay Sposito
ENERGY PUBLIC WORKS LAND DEVELOPMENT
www.mackaysposito.com

ERIC L. PILCHER
STATE OF WASHINGTON
43952
REGISTERED
PROFESSIONAL ENGINEER
10/12/2023

STATION 57 ADDITION
GIG HARBOR FIRE AND MEDIC ONE
GIG HARBOR, WASHINGTON

PROJECT # 2022010.03

BID SET

ISSUE DATE JANUARY 8, 2024

REVISION SCHEDULE

DEMOLITION & TESC

SHEET #
C01.01

DATE/TIME PRINTED: 10/12/2023 7:16 AM
J:\18017 - GHFMO Station 57\500 Design\502 Drawings\Sheets\18017 - C01.01 Demolition & TESC.dwg

STANDARD EROSION AND SEDIMENT CONTROL NOTES

1. APPROVAL OF THIS CONSTRUCTION SWPPP DOES NOT CONSTITUTE AN APPROVAL OF PERMANENT ROAD
   OR DRAINAGE DESIGN (E.G., SIZE AND LOCATION OF ROADS, PIPES, RESTRICTORS, CHANNELS, RETENTION/
   DETENTION/INFILTRATION FACILITIES, UTILITIES, ETC.).
2. THE IMPLEMENTATION OF THIS CONSTRUCTION SWPPP AND THE CONSTRUCTION, MAINTENANCE, REPLACEMENT, AND UPGRADING OF THESE CONSTRUCTION SWPPP FACILITIES IS THE RESPONSIBILITY
   OF THE APPLICANT/CONTRACTOR UNTIL ALL CONSTRUCTION IS COMPLETED AND APPROVED AND
   VEGETATION/LANDSCAPING IS ESTABLISHED.
3. THE BOUNDARIES OF THE CLEARING LIMITS SHOWN ON THIS PLAN SHALL BE CLEARLY FLAGGED IN THE
   FIELD PRIOR TO CONSTRUCTION. DURING THE CONSTRUCTION PERIOD, NO DISTURBANCE BEYOND THE
   FLAGGED CLEARING LIMITS SHALL BE PERMITTED. THE FLAGGING SHALL BE MAINTAINED BY THE
   APPLICANT/CONTRACTOR FOR THE DURATION OF CONSTRUCTION.
4. THE CONSTRUCTION SWPPP FACILITIES SHOWN ON THIS PLAN MUST BE CONSTRUCTED IN
   CONJUNCTION WITH ALL CLEARING AND GRADING ACTIVITIES, AND IN SUCH A MANNER AS TO INSURE THAT SEDIMENT AND SEDIMENT LADEN WATER DO NOT ENTER THE DRAINAGE SYSTEM, ROADWAYS, OR VIOLATE APPLICABLE WATER STANDARDS.
5. THE CONSTRUCTION SWPPP FACILITIES SHOWN ON THIS PLAN ARE THE MINIMUM REQUIREMENTS FOR
   ANTICIPATED SITE CONDITIONS. DURING THE CONSTRUCTION PERIOD, THESE CONSTRUCTION SWPPP
   FACILITIES SHALL BE UPGRADED AS NEEDED FOR UNEXPECTED STORM EVENTS AND TO ENSURE THAT
   SEDIMENT AND SEDIMENT-LADEN WATER DO NOT LEAVE THE SITE.
6. THE CONSTRUCTION SWPPP FACILITIES SHALL BE INSPECTED DAILY BY THE APPLICANT/CONTRACTOR
   AND MAINTAINED AS NECESSARY TO ENSURE THEIR CONTINUED FUNCTIONING.
7. THE CONSTRUCTION SWPPP FACILITIES ON INACTIVE SITES SHALL BE INSPECTED AND MAINTAINED A
   MINIMUM OF ONCE A MONTH OR WITHIN THE 48 HOURS FOLLOWING A MAJOR STORM EVENT.
8. AT NO TIME SHALL MORE THAN 1-FOOT OF SEDIMENT BE ALLOWED TO ACCUMULATE WITHIN A TRAPPED
   CATCH BASIN. ALL CATCH BASINS AND CONVEYANCE LINES SHALL BE CLEANED PRIOR TO PAVING. THE
   CLEANING OPERATION SHALL NOT FLUSH SEDIMENT LADEN WATER INTO THE DOWNSTREAM SYSTEM.
9. STABILIZED CONSTRUCTION ENTRANCES SHALL BE INSTALLED AT THE BEGINNING OF CONSTRUCTION AND
   MAINTAINED FOR THE DURATION OF THE PROJECT. ADDITIONAL MEASURES MAY BE REQUIRED TO INSURE
   THAT ALL PAVED AREAS ARE KEPT CLEAN FOR THE DURATION OF THE PROJECT.

CONSTRUCTION SEQUENCE

1. CALL PIERCE COUNTY INSPECTOR TO ARRANGE A PRE-CONSTRUCTION MEETING.
2. IDENTIFY LIMITS OF CLEARING.
3. INSTALL FILTER FABRIC FENCE AND TREE PROTECTION FENCE.
4. INSTALL ROCK-LINED CONSTRUCTION ENTRANCE(S).
5. CLEAR TO LIMITS SHOWN ON PLAN.
6. SAWCUT AND DEMOLISH EXISTING PAVEMENTS TO LIMITS SHOWN ON THE PLANS.
7. ROUGH GRADE SITE AS DESIGNED.
8. INSTALL BUILDING FOUNDATION.
9. INSTALL SANITARY SEWER SYSTEM (TO SEPTIC).
10. INSTALL STORM DRAINAGE.
11. INSTALL SEDIMENT BARRIERS OVER NEW CATCH BASINS.
12. PAVE FLOOR SLABS AND BEGIN VERTICAL CONSTRUCTION.
13. FINE GRADE FOR CURB AND GUTTER, AND SIDEWALKS.
14. INSTALL CURB AND GUTTER.
15. PAVE SITE.
16. INSTALL SIDEWALKS.
17. HYDROSEED ALL SLOPES NOT LANDSCAPED OR ANTICIPATED FOR ADDITIONAL WORK WITHIN 6 MONTHS.
18. COMPLETE LANDSCAPING.
19. REMOVE SEDIMENT BARRIERS.

SEEDING NOTES

1. SEED MIXTURE SHALL BE AS SHOWN BELOW, AND SHALL BE APPLIED AT THE RATE OF 120 POUNDS PER ACRE.

NAME	PROPORTION BY WEIGHT	PERCENT PURITY	PERCENT GERMINATION
RED TOP	10%	92	90
ANNUAL RYE	40%	98	90
CHEWING FESCUE	40%	97	80
WHITE DUTCH CLOVER	10%	96	90

2. SEED BEDS PLANTED BETWEEN MAY 1 AND OCTOBER 31 WILL REQUIRE IRRIGATION AND OTHER MAINTENANCE AS NECESSARY TO FOSTER AND PROTECT THE ROOT STRUCTURE.
3. FOR SEED BEDS PLANTED BETWEEN OCTOBER 31 AND APRIL 30, ARMORING OF THE SEED BED WILL BE NECESSARY. (E.G., GEOTEXTILES, JUTE MAT, CLEAR PLASTIC COVERING).
4. BEFORE SEEDING, INSTALL NEEDED SURFACE RUNOFF CONTROL MEASURES SUCH AS GRADIENT TERRACES, INTERCEPTOR DIKES, SWALES, LEVEL SPREADERS AND SEDIMENT BASINS.
5. THE SEEDBED SHALL BE FIRM WITH A FAIRLY FINE SURFACE, FOLLOWING SURFACE ROUGHENING. PERFORM ALL OPERATIONS ACROSS OR AT RIGHT ANGLES TO THE SLOPE.
6. FERTILIZERS ARE TO BE USED ACCORDING TO SUPPLIERS RECOMMENDATIONS. AMOUNTS USED SHOULD BE MINIMIZED, ESPECIALLY ADJACENT TO WATER BODIES AND WETLANDS.

SILT FENCE NOTES

1. THE CONTRACTOR SHALL INSTALL AND MAINTAIN TEMPORARY SILT FENCES AT THE LOCATIONS SHOWN IN THE PLANS.
2. CONSTRUCT SILT FENCES IN AREAS OF CLEARING, GRADING, OR DRAINAGE PRIOR TO STARTING THOSE ACTIVITIES.
3. THE SILT FENCE SHALL HAVE A 2-FEET MIN. AND 2.5-FEET MAX. HEIGHT ABOVE THE ORIGINAL GROUND SURFACE.
4. THE FILTER FABRIC SHALL BE SEWN TOGETHER AT THE POINT OF MANUFACTURE TO FORM FILTER FABRIC LENGTHS AS REQUIRED. LOCATE ALL SEWN SEAMS AT SUPPORT POSTS. ALTERNATIVELY, TWO SECTIONS OF SILT FENCE CAN BE OVERLAPPED, PROVIDED THE CONTRACTOR CAN DEMONSTRATE, TO THE SATISFACTION OF THE ENGINEER, THAT THE OVERLAP IS LONG ENOUGH AND THAT THE ADJACENT FENCE SECTIONS ARE CLOSE ENOUGH TOGETHER TO PREVENT SILT LADEN WATER FROM ESCAPING THROUGH THE FENCE AT THE OVERLAP.
5. ATTACH THE FILTER FABRIC ON THE UP-SLOPE SIDE OF THE POSTS AND SECURE WITH STAPLES, WIRE, OR IN ACCORDANCE WITH THE MANUFACTURER'S RECOMMENDATIONS. ATTACH THE FILTER FABRIC TO THE POSTS IN A MANNER THAT REDUCES THE POTENTIAL FOR TEARING.
6. SUPPORT THE FILTER FABRIC WITH WIRE OR PLASTIC MESH, DEPENDENT ON THE PROPERTIES OF THE GEOTEXTILE SELECTED FOR USE. IF WIRE OR PLASTIC MESH IS USED, FASTEN THE MESH SECURELY TO THE UP-SLOPE SIDE OF THE POSTS WITH THE FILTER FABRIC UP-SLOPE OF THE MESH.
7. MESH SUPPORT, IF USED, SHALL CONSIST OF STEEL WIRE WITH A MAXIMUM MESH SPACING OF 2-INCHES, OR A PREFABRICATED POLYMERIC MESH. THE STRENGTH OF THE WIRE OR POLYMERIC MESH SHALL BE EQUIVALENT TO OR GREATER THAN 180 POUNDS GRAB TENSILE STRENGTH. THE POLYMERIC MESH MUST BE AS RESISTANT TO THE SAME LEVEL OF ULTRAVIOLET RADIATION AS THE FILTER FABRIC IT SUPPORTS.
8. BURY THE BOTTOM OF THE FILTER FABRIC 8-INCHES MIN. BELOW THE GROUND SURFACE. BACKFILL AND TAMP SOIL IN PLACE OVER THE BURIED PORTION OF THE FILTER FABRIC, SO THAT NO FLOW CAN PASS BENEATH THE FENCE AND SCOURING CANNOT OCCUR. THE WIRE OR POLYMERIC MESH SHALL EXTEND INTO THE GROUND 3-INCHES MIN.
9. DRIVE OR PLACE THE FENCE POSTS INTO THE GROUND 18-INCHES MINIMUM. A 12-INCH MINIMUM DEPTH IS ALLOWED IF TOPSOIL OR OTHER SOFT SUBGRADE SOIL IS NOT PRESENT AND 18-INCHES CANNOT BE REACHED. INCREASE FENCE POST MIN. DEPTHS BY 6-INCHES IF THE FENCE IS LOCATED ON SLOPES OF 3H:1V OR STEEPER AND THE SLOPE IS PERPENDICULAR TO THE FENCE. IF REQUIRED POST DEPTHS CANNOT BE OBTAINED, THE POSTS SHALL BE ADEQUATELY SECURED BY BRACING OR GUYING TO PREVENT OVERTURNING OF THE FENCE DUE TO SEDIMENT LOADING.
10. USE WOOD, STEEL, OR EQUIVALENT POSTS. THE SPACING OF THE SUPPORT POSTS SHALL BE A MAXIMUM OF 6-FEET. POSTS SHALL CONSIST OF EITHER:
    - WOOD WITH DIMENSIONS OF 2-INCHES BY 2-INCHES WIDE MIN. AND A 3-FEET MIN. LENGTH. WOOD POSTS SHALL BE FREE OF DEFECTS SUCH AS KNOTS, SPLITS, OR GOUGES.
    - NO. 6 STEEL REINFORCEMENT BAR OR LARGER.
    - ASTM A 120 STEEL PIPE WITH A MINIMUM DIAMETER OF 1-INCH.
    - U, T, L, OR C SHAPE STEEL POSTS WITH A MINIMUM WEIGHT OF 1.35 POUNDS/FEET.
    - OTHER STEEL POSTS HAVING EQUIVALENT STRENGTH AND BENDING RESISTANCE TO THE POST SIZES LISTED ABOVE.
11. LOCATE SILT FENCES ON CONTOUR AS MUCH AS POSSIBLE, EXCEPT AT THE ENDS OF THE FENCE, WHERE THE FENCE SHALL BE TURNED UPHILL SUCH THAT THE SILT FENCE CAPTURES THE RUNOFF WATER AND PREVENTS WATER FROM FLOWING AROUND THE END OF THE FENCE.
12. IF THE FENCE MUST CROSS CONTOURS, WITH THE EXCEPTION OF THE ENDS OF THE FENCE, PLACE GRAVEL CHECK DAMS PERPENDICULAR TO THE BACK OF THE FENCE TO MINIMIZE CONCENTRATED FLOW AND EROSION. THE SLOPE OF THE FENCE LINE WHERE CONTOURS MUST BE CROSSED SHALL NOT BE STEEPER THAN 3H:1V.
    - GRAVEL CHECK DAMS SHALL BE APPROXIMATELY 1-FOOT DEEP AT THE BACK OF THE FENCE. GRAVEL CHECK DAMS SHALL BE CONTINUED PERPENDICULAR TO THE FENCE AT THE SAME ELEVATION UNTIL THE TOP OF THE CHECK DAM INTERCEPTS THE GROUND SURFACE BEHIND THE FENCE.
    - GRAVEL CHECK DAMS SHALL CONSIST OF CRUSHED SURFACING BASE COURSE, GRAVEL BACKFILL FOR WALLS, OR SHOULDER BALLAST. GRAVEL CHECK DAMS SHALL BE LOCATED EVERY 10-FEET ALONG THE FENCE WHERE THE FENCE MUST CROSS CONTOURS.

INLET PROTECTION NOTES

1. PLACE CONCRETE BLOCKS LENGTHWISE ON THEIR SIDES IN A SINGLE ROW AROUND THE PERIMETER OF THE INLET, SO THAT THE OPEN ENDS FACE OUTWARD, NOT UPWARD. THE ENDS OF ADJACENT BLOCKS SHALL ABUT. THE HEIGHT OF THE BARRIER CAN BE VARIED, DEPENDING ON DESIGN NEEDS, BY STACKING COMBINATIONS OF BLOCKS THAT ARE 4 INCHES, AND 12 INCHES WIDE. THE ROW OF BLOCKS SHALL BE AT LEAST 12 INCHES BUT NO GREATER THAN 24 INCHES HIGH.
2. PLACE WIRE MESH OVER THE OUTSIDE VERTICAL FACE (OPEN END) OF THE CONCRETE BLOCKS TO PREVENT STONE FROM BEING WASHED THROUGH THE BLOCKS. USE HARDWARE CLOTH OR COMPARABLE WIRE MESH WITH 1/2 INCH OPENINGS.
3. PILE STONE AGAINST THE WIRE MESH TO THE TOP OF THE BLOCKS. USE 3/4 TO 3 INCH GRAVEL.
4. PLACE WIRE MESH OVER THE DROP INLET SO THAT THE WIRE EXTENDS A MINIMUM OF 1 FOOT BEYOND EACH SIDE OF THE INLET STRUCTURE. USE HARDWARE CLOTH OR COMPARABLE WIRE MESH WITH 1/2 INCH OPENINGS. IF MORE THAN ONE STRIP OF MESH IS NECESSARY, OVERLAP THE STRIPS. PLACE FILTER FABRIC OVER WIRE MESH.
5. PLACE 3/4 INCH GRAVEL OVER THE WIRE MESH. THE DEPTH OF STONE SHALL BE AT LEAST 12 INCHES OVER THE ENTIRE INLET OPENING. EXTEND THE STONE BEYOND THE INLET OPENING AT LEAST 18 INCHES ON ALL SIDES.
6. IF THE STONE FILTER BECOMES CLOGGED WITH SEDIMENT, THE STONES MUST BE PULLED AWAY FROM THE INLET AND CLEANED OR REPLACED.

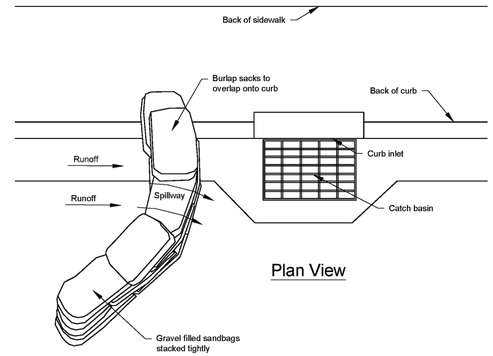

Notes:
1. Place curb type sediment barriers on gently sloping street segments, where water can pond and allow sediment to separate from runoff.
2. Sandbags of either burlap or woven 'geotextile' fabric, are filled with gravel, layered and packed tightly.
3. Leave a one sandbag gap in the top row to provide a spillway for overflow.
4. Inspect barriers and remove sediment after each storm event. Sediment and gravel must be removed from the traveled way immediately.

NOT TO SCALE

1 CURB AND GUTTER BARRIER
NOT TO SCALE

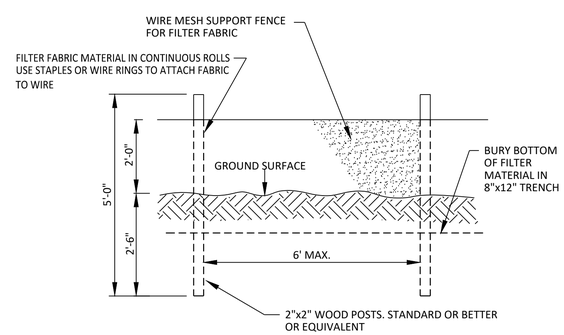

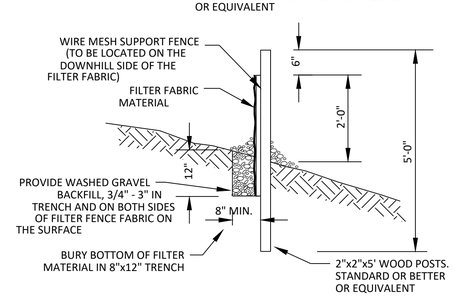

2 FILTER FABRIC FENCE
NOT TO SCALE

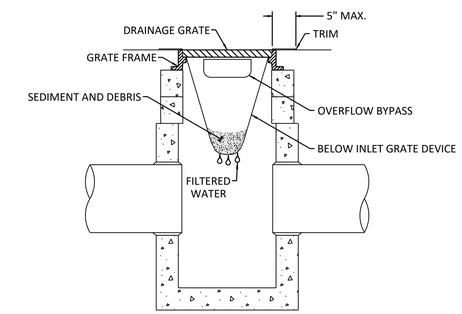

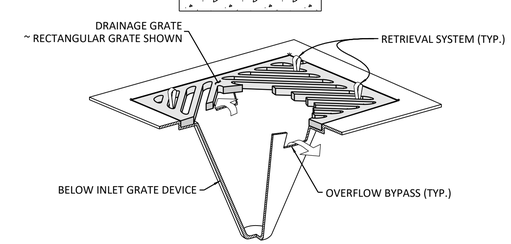

NOTES:
1. SIZE THE BELOW INLET GRATE DEVICE (BIGD) FOR THE STORM WATER STRUCTURE IT WILL SERVICE.
2. THE BIGD SHALL HAVE A BUILT-IN HIGH-FLOW RELIEF SYSTEM (OVERFLOW BYPASS).
3. THE RETRIEVAL SYSTEM MUST ALLOW REMOVAL OF THE BIGD WITHOUT SPILLING THE COLLECTED MATERIAL.
4. PERFORM MAINTENANCE IN ACCORDANCE WITH STANDARD SPECIFICATION 8-01.3(15).

3 STORM DRAIN INLET PROTECTION
NOT TO SCALE

CALL 2 BUSINESS DAYS BEFORE YOU DIG
811
"It's the Law"
www.callbeforeyoudig.com

PRIVATE IMPROVEMENTS

1011485
PERMIT #

DEVELOPMENT ENGINEER

DATE

PIERCE COUNTY ORDINANCE NOs: STORM 2021-45 ROAD

1. A PRE-CONSTRUCTION MEETING SHALL BE REQUESTED AT LEAST 48-HOURS IN ADVANCE OF THE START OF CONSTRUCTION. CONTACT LARRY FREMONT, THE AREA INSPECTOR, AT 253-798- 7187.
2. APPOINT A CERTIFIED EROSION AND SEDIMENT CONTROL LEAD WHO SHALL BE PROVIDED A COPY OF THE SWPPP, EROSION CONTROL PLAN & INSPECTION SCHEDULE.
3. FAILURE TO OBTAIN REQUIRED INSPECTIONS MAY ENDANGER OR DELAY PROJECT APPROVAL.
4. ALL WORK IN THE PUBLIC RIGHT-OF-WAY REQUIRES A GENERAL RIGHT-OF-WAY PERMIT FROM PIERCE COUNTY PLANNING AND PUBLIC WORKS.

RICE fergus MILLER
ARCHITECTURE INTERIORS PLANNING VIZLAB
275 FIFTH STREET, SUITE 100
BREMERTON, WA 98337
360-377-8773
RFMARCH.COM

MacKay Sposito
ENERGY PUBLIC WORKS LAND DEVELOPMENT
www.mackaysposito.com

ERIC L. PILTHER
STATE OF WASHINGTON
43952
REGISTERED
PROFESSIONAL ENGINEER
10/12/2023

STATION 57 ADDITION
GIG HARBOR FIRE AND MEDIC ONE
GIG HARBOR, WASHINGTON

PROJECT # 2022010.03

BID SET

ISSUE DATE JANUARY 8, 2024

REVISION SCHEDULE

TESC NOTES & DETAILS

SHEET #
C01.02

DATE/TIME PRINTED: 10/12/2023 7:18 AM
J:\18017 - GHFMO Station 57\500 Design\502 Drawings\Sheets\18017 - C01.02 TESC Notes & Details.dwg

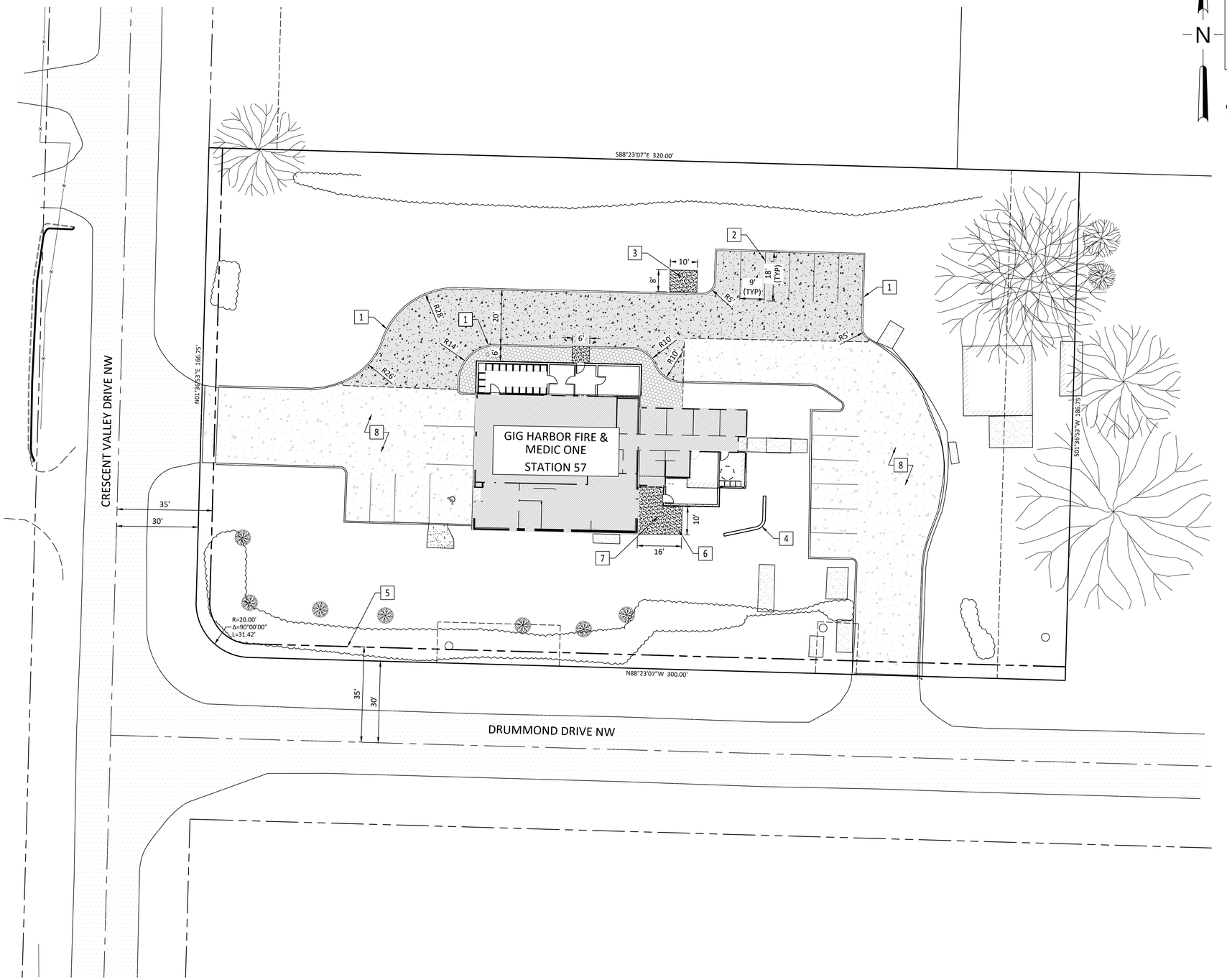

PRIVATE IMPROVEMENTS

1011485
PERMIT #

DEVELOPMENT ENGINEER

DATE

PIERCE COUNTY ORDINANCE NOs: STORM 2021-45 ROAD

1. A PRE-CONSTRUCTION MEETING SHALL BE REQUESTED AT LEAST 48-HOURS IN ADVANCE OF THE START OF CONSTRUCTION. CONTACT LARRY FREMONT, THE AREA INSPECTOR, AT 253-798- 7187.
2. APPOINT A CERTIFIED EROSION AND SEDIMENT CONTROL LEAD WHO SHALL BE PROVIDED A COPY OF THE SWPPP, EROSION CONTROL PLAN & INSPECTION SCHEDULE.
3. FAILURE TO OBTAIN REQUIRED INSPECTIONS MAY ENDANGER OR DELAY PROJECT APPROVAL.
4. ALL WORK IN THE PUBLIC RIGHT-OF-WAY REQUIRES A GENERAL RIGHT-OF-WAY PERMIT FROM PIERCE COUNTY PLANNING AND PUBLIC WORKS.

N

0 20 40
SCALE: 1" = 20'

GENERAL NOTES

1. ALL DIMENSIONS ARE FACE TO BUILDING/FACE OF CURB, WHERE APPLICABLE

LEGEND

- PERVIOUS CONCRETE PAVING. SEE DETAIL 1 ON SHEET C04.01
- CONCRETE SIDEWALK PAVING. SEE DETAIL 2 ON SHEET C04.01
- REINSTALL SALVAGED COBBLES. SUPPLEMENT WITH 4" COBBLES METING WSDOT 9-03.11(2)

SITE NOTES

1. CEMENT CONCRETE TRAFFIC HEADER CURB. SEE DETAIL SHEET C04.01
2. 4" WIDE, WHITE PARKING STRIPE, LOW-VOC WATERBORN PER WSDOT STD 9-34.2, TYP.
3. DUMPSTER ENCLOSURE. PROVIDE THICKENED EDGE AT OUTER LIMIT. SEE ARCH.
4. ROCKERY. SEE SHEET C04.01
5. PROPOSED RIGHT-OF-WAY TO BE DEDICATED BY STATUTORY WARRANTY DEED
6. CONCRETE PATIO. PROVIDE THICKENED EDGE AT OUTER LIMIT.
7. REINSTALL PICNIC TABLE. SEE ARCH.
8. VACTOR SOIL AND ACCUMULATED DEBRIS FROM POROUS CONCRETE FOLLOWING CONSTRUCTION ACTIVITIES.

CALL
2 BUSINESS DAYS
BEFORE YOU DIG
811
"It's the Law"
www.callbeforeyoudig.com

RICE fergus MILLER
ARCHITECTURE INTERIORS PLANNING VIZLAB
275 FIFTH STREET, SUITE 100
BREMERTON, WA 98337
360-377-8773
RFMARCH.COM

MacKay Sposito
ENERGY PUBLIC WORKS LAND DEVELOPMENT
www.mackaysposito.com

ERIC L. PILCHER
STATE OF WASHINGTON
43952
REGISTERED
PROFESSIONAL ENGINEER
10/12/2023

STATION 57 ADDITION
GIG HARBOR FIRE AND MEDIC ONE
GIG HARBOR, WASHINGTON

PROJECT # 2022010.03

BID SET

ISSUE DATE JANUARY 8, 2024

REVISION SCHEDULE

SITE PLAN

SHEET #
C02.01

DATE/TIME PRINTED: 10/12/2023 1:47 PM
J:\18017 - GHFMO Station 57\500 Design\502 Drawings\Sheets\18017 - C02.01 Site Plan.dwg

PRIVATE IMPROVEMENTS

1011485
PERMIT #

DEVELOPMENT ENGINEER

DATE

PIERCE COUNTY ORDINANCE NOs: STORM 2021-45 ROAD

1. A PRE-CONSTRUCTION MEETING SHALL BE REQUESTED AT LEAST 48-HOURS IN ADVANCE OF THE START OF CONSTRUCTION. CONTACT LARRY FREMONT, THE AREA INSPECTOR, AT 253-798- 7187.
2. APPOINT A CERTIFIED EROSION AND SEDIMENT CONTROL LEAD WHO SHALL BE PROVIDED A COPY OF THE SWPPP, EROSION CONTROL PLAN & INSPECTION SCHEDULE.
3. FAILURE TO OBTAIN REQUIRED INSPECTIONS MAY ENDANGER OR DELAY PROJECT APPROVAL.
4. ALL WORK IN THE PUBLIC RIGHT-OF-WAY REQUIRES A GENERAL RIGHT-OF-WAY PERMIT FROM PIERCE COUNTY PLANNING AND PUBLIC WORKS.

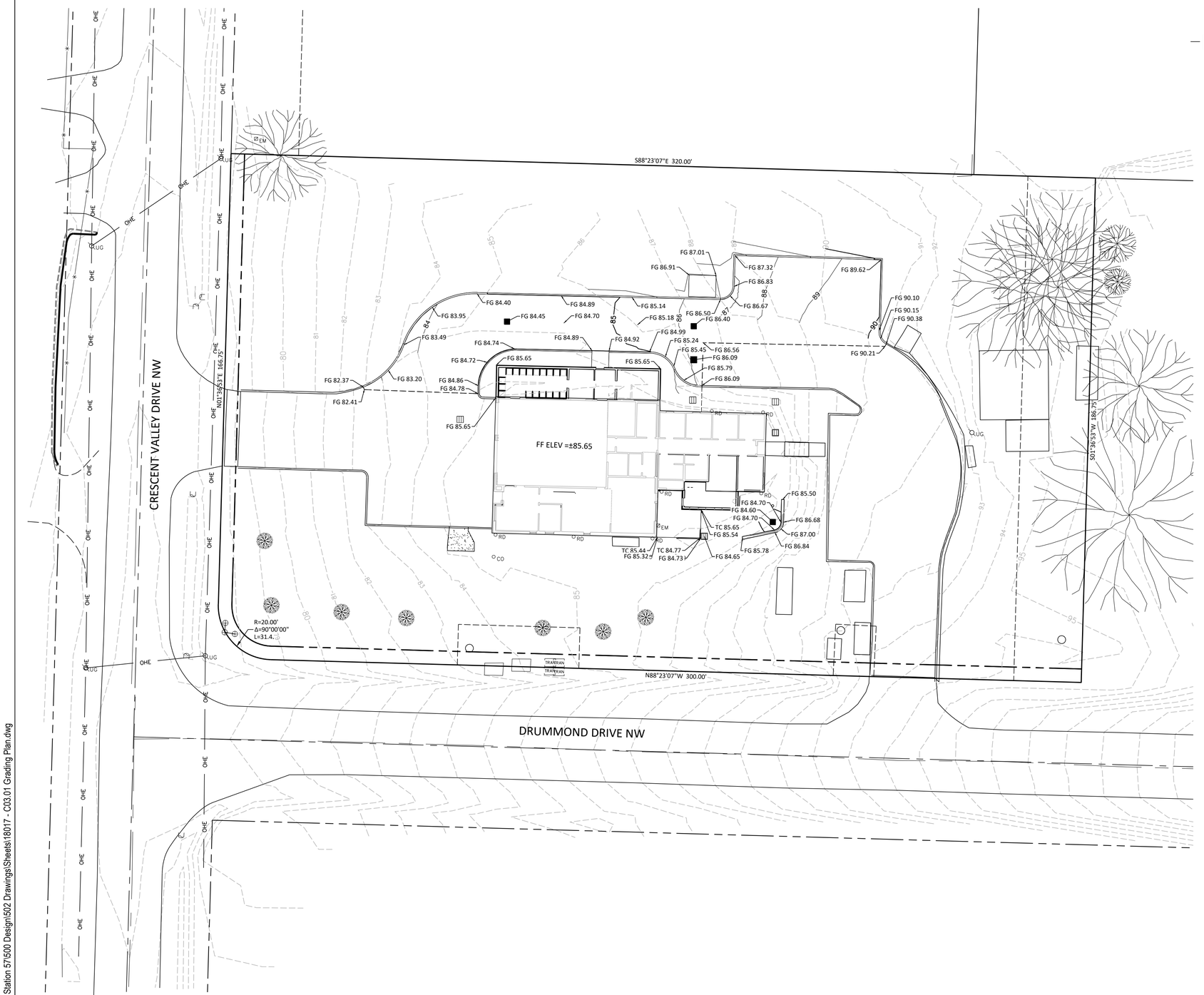

RICE fergus MILLER
ARCHITECTURE INTERIORS PLANNING VIZLAB
275 FIFTH STREET, SUITE 100
BREMERTON, WA 98337
360-377-8773
RFMARCH.COM

MacKay Sposito
ENERGY PUBLIC WORKS LAND DEVELOPMENT
www.mackaysposito.com

ERIC L. PILCHER
STATE OF WASHINGTON
43952
REGISTERED
PROFESSIONAL ENGINEER
10/12/2023

STATION 57 ADDITION
GIG HARBOR FIRE AND MEDIC ONE

GIG HARBOR, WASHINGTON

PROJECT # 2022010.03

BID SET

ISSUE DATE JANUARY 8, 2024

REVISION SCHEDULE

GRADING PLAN

SHEET #
C03.01

CALL
2 BUSINESS DAYS
BEFORE YOU DIG
811
"It's the Law"
www.callbeforeyoudig.com

DATE/TIME PRINTED: 10/12/2023 7:50 AM
J:\18017 - GHFMO Station 57\500 Design\502 Drawings\Sheets\18017 - C03.01 Grading Plan.dwg

INFILTRATION TRENCH NOTES:

1. TWO (2) INFILTRATION VERIFICATION TESTS SHALL BE PERFORMED DURING CONSTRUCTION IN ACCORDANCE WITH APPENDIX III-A OF THE PIERCE COUNTY STORMWATER MANAGEMENT AND SITE DEVELOPMENT MANUAL (2021 EDITION, ORD. 2021-44) AND SUBMITTED TO THE PROJECT CIVIL ENGINEER.
2. INFILTRATION TESTING SHALL BE PERFORMED UNDER THE SUPERVISION OF A GEOTECHNICAL ENGINEER.
3. NOTIFY PIERCE COUNTY INSPECTOR FOR SUBGRADE INSPECTION PRIOR TO BACKFILL.

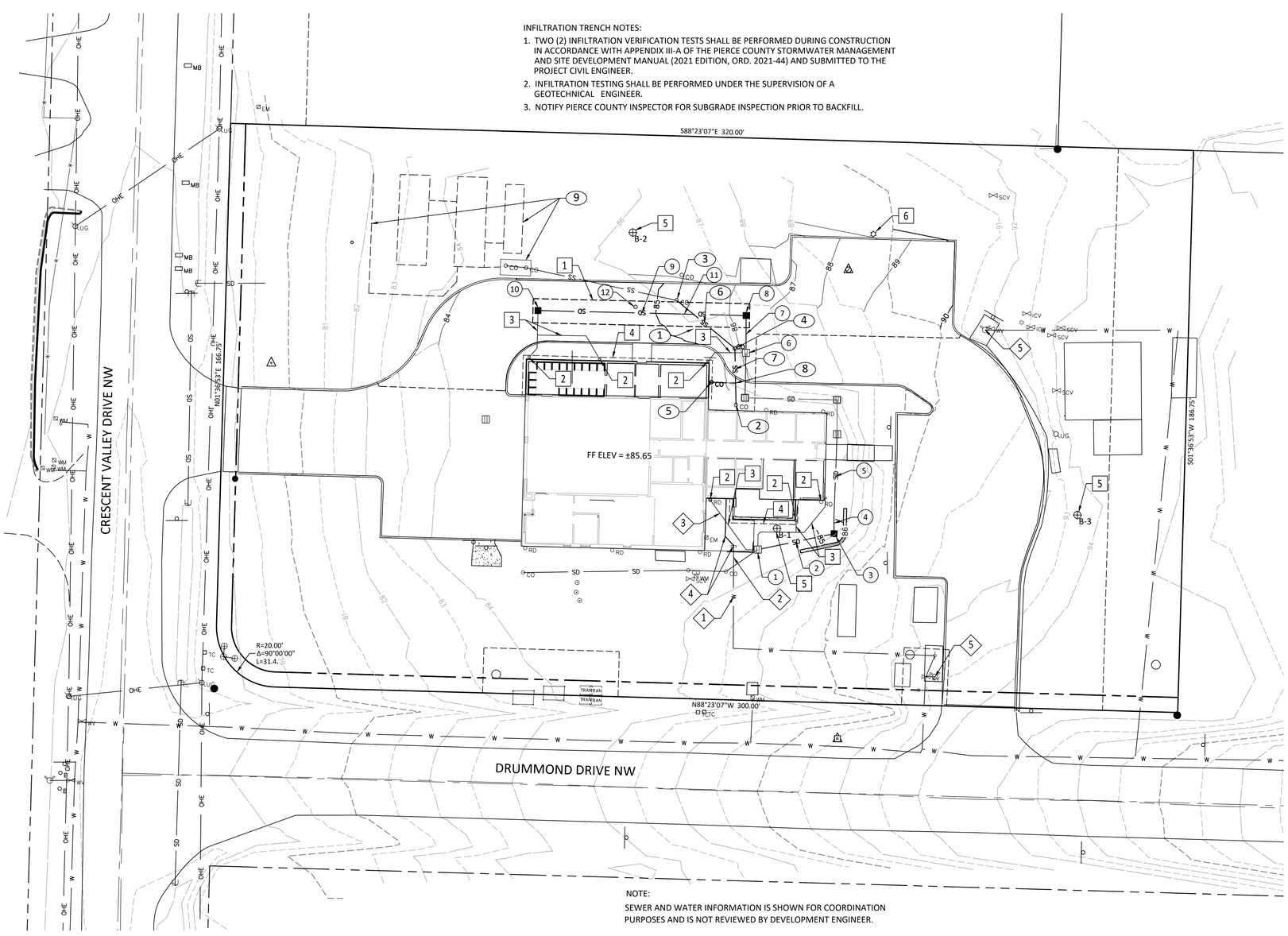

NOTE:
SEWER AND WATER INFORMATION IS SHOWN FOR COORDINATION PURPOSES AND IS NOT REVIEWED BY DEVELOPMENT ENGINEER.

PRIVATE IMPROVEMENTS

1011485
PERMIT #

DEVELOPMENT ENGINEER

DATE

PIERCE COUNTY ORDINANCE NOs: STORM 2021-45 ROAD

1. A PRE-CONSTRUCTION MEETING SHALL BE REQUESTED AT LEAST 48-HOURS IN ADVANCE OF THE START OF CONSTRUCTION. CONTACT LARRY FREMONT, THE AREA INSPECTOR, AT 253-798- 7187.
2. APPOINT A CERTIFIED EROSION AND SEDIMENT CONTROL LEAD WHO SHALL BE PROVIDED A COPY OF THE SWPPP, EROSION CONTROL PLAN & INSPECTION SCHEDULE.
3. FAILURE TO OBTAIN REQUIRED INSPECTIONS MAY ENDANGER OR DELAY PROJECT APPROVAL.
4. ALL WORK IN THE PUBLIC RIGHT-OF-WAY REQUIRES A GENERAL RIGHT-OF-WAY PERMIT FROM PIERCE COUNTY PLANNING AND PUBLIC WORKS.

N

0 20 40
SCALE: 1" = 20'

STORM NOTES

1. EX CB#01 TYPE 1
   RIM EL= 84.65
   IE 82.95 - 6" IN (W)
   IE 82.95 - 6" IN (N)
   IE 82.15 - 8" OUT (E)
2. 8" N-12 L=26' S=0.73%
3. CB#02 TYPE 1
   RIM EL= 84.60
   IE 81.96 - 8" IN (W)
   IE 81.84 - 8" OUT (N)
4. NEW 8" N-12 L=6' S=0.52%
5. EX 8" N-12 L=27' S=0.52%
6. EX CB#04 TYPE 1
   RIM EL= 86.14
   EX IE 81.40 - 8" IN (S)
   IE 81.56 - 6" IN (W)
   IE 81.39 - 8" OUT (N)
7. 8" N-12 L=12' S=1.05%
8. CB#05 TYPE 1
   RIM EL= 86.40
   IE 81.26 - 8" IN (S)
   IE 80.93 - 12" OUT (W)
9. 12" PERFORATED N-12 L=69' S=0.00%
10. CB#06 TYPE 1
    RIM EL= 84.45
    IE 80.93 - 12" IN (E)
    IE 81.43 - 6" IN (S)
11. PIPE CROSSING
    IE 80.93 - 12" N-12 SD
    IE 81.43 - 6" SCH40 PVC SS
    0.61' CLEARANCE
12. 6" OBSERVATION WELL. SEE DETAIL 15.0, SHEET C04.02. PROVIDE 3" HORIZONTAL CLEARANCE FROM LATERAL N-12 PIPE AND TRAFFIC RATED "CLEANOUT" STYLE LID.

STANDARD PIERCE COUNTY STORMWATER NOTES

1. ALL WORKMANSHIP AND MATERIALS SHALL BE IN ACCORDANCE WITH COUNTY STANDARDS AND THE MOST CURRENT COPY OF THE STATE OF WASHINGTON STANDARD SPECIFICATIONS FOR ROAD, BRIDGE AND MUNICIPAL CONSTRUCTION (WSDOT/APWA) AND AS AMENDED BY THE COUNTY OR THE STATE.
2. TEMPORARY EROSION/WATER POLLUTION PREVENTION MEASURES SHALL BE REQUIRED IN ACCORDANCE WITH THE PIERCE COUNTY STORMWATER MANAGEMENT MANUAL AND THE DEPT. OF ECOLOGY'S CONSTRUCTION STORMWATER GENERAL PERMIT. SHOULD THE TEMPORARY EROSION AND SEDIMENTATION CONTROL MEASURES AS SHOWN ON THIS DRAWING NOT PROVE ADEQUATE TO CONTROL EROSION AND SEDIMENTATION, THE APPLICANT/CONTRACTOR SHALL INSTALL ADDITIONAL FACILITIES AS NECESSARY TO PROTECT ADJACENT PROPERTIES, SENSITIVE AREAS, NATURAL WATER COURSES, AND/OR STORM DRAINAGE SYSTEMS.
3. CALL THE UNDERGROUND LOCATE LINE 1-800-424-5555 A MINIMUM OF 48 HOURS PRIOR TO ANY EXCAVATIONS.
4. THE STORM DRAINAGE SYSTEM SHALL BE CONSTRUCTED ACCORDING TO APPROVED PLANS ON FILE WITH THE COUNTY. ANY SIGNIFICANT DEVIATION FROM THE APPROVED PLANS WILL REQUIRE WRITTEN APPROVAL FROM THE COUNTY.
5. A COPY OF THE APPROVED CONSTRUCTION STORMWATER POLLUTION PREVENTION PLAN AND STORMWATER PLANS MUST BE ON THE JOB SITE WHENEVER CONSTRUCTION IS IN PROGRESS
6. ALL EROSION CONTROL AND STORMWATER FACILITIES SHALL BE REGULARLY INSPECTED AND MAINTAINED BY THE DESIGNATED CERTIFIED EROSION AND SEDIMENT CONTROL LEAD (CESCL) DURING CONSTRUCTION.
7. IT SHALL BE THE SOLE RESPONSIBILITY OF THE CONTRACTOR TO OBTAIN STREET USE AND OTHER RELATED OR REQUIRED PERMITS PRIOR TO ANY CONSTRUCTION ACTIVITY IN THE MUNICIPALITY'S RIGHT-OF-WAY. IT SHALL ALSO BE THE RESPONSIBILITY OF THE CONTRACTOR TO OBTAIN ALL REQUIRED PERMITS PRIOR TO ANY CONSTRUCTION. THE CONTRACTOR SHALL ABIDE BY ALL REQUIREMENTS FOR TRAFFIC CONTROL & SAFETY WHEN WORKING IN THE ROAD RIGHT-OF-WAY.
8. THE CONTRACTOR SHALL NOTIFY THE PROJECT ENGINEER IN THE EVENT OR DISCOVERY OF POOR SOILS, STANDING GROUNDWATER, OR SEVERE DISCREPANCIES FROM SOIL LOG DESCRIPTIONS AS NOTED ON THE PLANS.
9. FOR PUBLIC SYSTEMS, THE CONTRACTOR SHALL CALL FOR INSPECTION 48 HOURS PRIOR TO COVERING ANY DRAINAGE STRUCTURE.
10. ALL DRAINAGE STRUCTURES, SUCH AS CATCH BASINS AND MANHOLES, NOT LOCATED WITHIN A TRAVELED ROADWAY OR SIDEWALK, SHALL HAVE SOLID LOCKING LIDS. ALL DRAINAGE STRUCTURES ASSOCIATED WITH A PERMANENT RETENTION/DETENTION FACILITY SHALL HAVE SOLID LOCKING LIDS.

UTILITY NOTES

1. INFILTRATION TRENCH. SEE DETAILS ON SHEET C04.02
2. PVC DOWNSPOUT BOOT CONNECTION WITH WYE CLEANOUT
3. 6" SCH40 PVC @ 1.00% MIN.
4. 4" PERFORATED PVC FOUNDATION DRAIN. CONNECT TO EXISTING.
5. APPROXIMATE BORING LOCATION (TYP). SEE TABLE.
6. NEW LIGHT POLE. SEE ELECTRICAL SITE PLAN

INFILTRATION RATES BASED ON FIELD TESTING AND VERIFICATIONS THROUGH TEXTURAL ANALYSIS

LOCATION	TEST DEPTH (FEET)	INFILTRATION RATE (MIN/INCH) NO FACTOR OF SAFETY	USDA SOIL CLASSIFICATION BASED ON VISUAL CLASSIFICATION	DEPTH TO GROUNDWATER (FEET)
B-1	5	5	MEDIUM SAND	8.5 FT
B-2	2.5	15	LOAMY SAND	6.5 FT
B-3	6.5	N/A	MEDIUM SAND	N/A

SEWER NOTES

1. EXISTING 6" PVC SANITARY (APPROXIMATE LOCATION). POTHOLE VERIFY AND NOTIFY ENGINEER OF ANY INCONSISTENCIES WITH THESE DRAWINGS.
2. EX SSCO#01
   IE 6" = 83.00 +/-
3. EX SSCO#02
   IE 6" = 82.60 +/-
   ADJUST RIM TO FINISHED GRADE
4. NEW SSCO#03, SEE DETAILS ON SHEET C04.02
   RIM EL= 85.85
   IE 6" = 82.82 +/-
5. NEW SSCO#04, SEE DETAILS ON SHEET C04.02
   RIM EL= 85.53
   IE 6" = 83.00*
   *PROVIDE 4" BY 6" ADAPTOR UPSTREAM OF CLEANOUT
6. 25 LF 6" SCH40 PVC @ 0.9%
7. 19 LF 6" SCH40 PVC @ 0.9%
8. 6" X 6" TEE
9. EXISTING SEPTIC TANK AND DRAIN FIELD.

WATER NOTES

1. EXISTING DIP WATER LINE (APPROXIMATE LOCATION)
2. POTHOLE VERIFY LOCATION AND DEPTH OF EXISTING WATER LINE. NOTIFY ENGINEER OF ANY INCONSISTENCIES WITH THESE DRAWINGS.
3. NEW 4" DIP CL52 WATER. SEE PLUMBING PLANS.
4. NEW 4" X 45° BEND
5. EXISTING FIRE HYDRANT

CALL
2 BUSINESS DAYS
BEFORE YOU DIG
811
"It's the Law"
www.callbeforeyoudig.com

RICE fergus MILLER
ARCHITECTURE INTERIORS PLANNING VIZLAB
275 FIFTH STREET, SUITE 100
BREMERTON, WA 98337
360-377-8773
RFMARCH.COM

MacKay Sposito
ENERGY PUBLIC WORKS LAND DEVELOPMENT
www.mackaysposito.com

ERIC L. PILCHER
STATE OF WASHINGTON
43952
REGISTERED
PROFESSIONAL ENGINEER
10/12/2023

STATION 57 ADDITION
GIG HARBOR FIRE AND MEDIC ONE

GIG HARBOR, WASHINGTON

PROJECT # 2022010.03

BID SET

ISSUE DATE JANUARY 8, 2024

REVISION SCHEDULE

UTILITY PLAN

SHEET #
C03.02

DATE/TIME PRINTED: 10/12/2023 2:07 PM
J:\18017 - GHFMO Station 57\500 Design\502 Drawings\Sheets\18017 - C03.02 Utility Plan.dwg

PRIVATE IMPROVEMENTS

1011485
PERMIT #

DEVELOPMENT ENGINEER

DATE

PIERCE COUNTY ORDINANCE NOs: STORM 2021-45 ROAD

1. A PRE-CONSTRUCTION MEETING SHALL BE REQUESTED AT LEAST 48-HOURS IN ADVANCE OF THE START OF CONSTRUCTION. CONTACT LARRY FREMONT, THE AREA INSPECTOR, AT 253-798- 7187.
2. APPOINT A CERTIFIED EROSION AND SEDIMENT CONTROL LEAD WHO SHALL BE PROVIDED A COPY OF THE SWPPP, EROSION CONTROL PLAN & INSPECTION SCHEDULE.
3. FAILURE TO OBTAIN REQUIRED INSPECTIONS MAY ENDANGER OR DELAY PROJECT APPROVAL.
4. ALL WORK IN THE PUBLIC RIGHT-OF-WAY REQUIRES A GENERAL RIGHT-OF-WAY PERMIT FROM PIERCE COUNTY PLANNING AND PUBLIC WORKS.

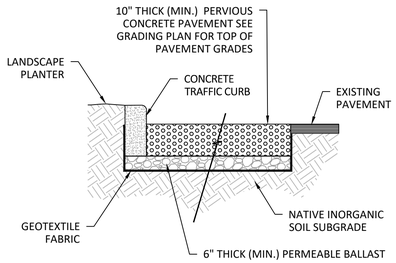

PERVIOUS CONCRETE REQUIREMENTS

1. PERVIOUS CONCRETE SHALL MEET "SPECIFICATION FOR PERVIOUS CONCRETE PAVEMENT" REPORTED BY ACI COMMITTEE 522.1-08.
2. PARKING AREA/DRIVEWAY CONSTRUCTION JOINTS SHALL BE SPACED AT 20' MAXIMUM.
3. INSTALLER SHALL BE A NATIONAL READY MIX CONCRETE ASSOCIATION (NRMCA) CERTIFIED PERVIOUS CONCRETE PLACER.
4. POWER SCREED, EQUAL TO BUNYAN POWER SCREED, SHALL BE USER FOR PLACING PERVIOUS CONCRETE.
5. PLACE GEOTEXTILE FABRIC BETWEEN BALLAST AND NATIVE SUBGRADE.
6. BALLAST SHALL BE PERMEABLE BALLAST PER SECTION 9-03.9(2) OF THE WASHINGTON STATE DEPARTMENT OF TRANSPORTATION 2010 STANDARD SPECIFICATION FOR ROAD, BRIDGE AND MUNICIPAL CONSTRUCTION.
7. GEOTEXTILE FABRIC SHALL BE PER SECTION 9-33.2(1), TABLES 3: FOR SEPERATION WITH A MAXIMUM APPARENT OPENING SIZE OF US#80. FABRIC SHALL BE MIRAFI 170N OR EQUIVALENT.
8. ENGINEER SHALL INSPECT SHOULDER BALLAST PRIOR TO INSTALLATION OF PERVIOUS CONCRETE. UPON COMPLETION AND CURING OF PERVIOUS CONCRETE, ENGINEER SHALL INSPECT AND COMPLETE "BUCKET TEST" PER THE LOW IMPACT DEVELOPMENT TECHNICAL GUIDANCE MANUAL THE PUGET SOUND. CONTRACTOR IS RESPONSIBLE FOR PROVIDING BUCKET AND WATER FOR THE TEST.
9. WHERE THE PAVING SURFACE IS SLOPED AT 5% OR MORE, PLACE LOW PERMEABILITY CHECK DAMS AT A SPACING OF 1.33 DIVIDED BY THE SLOPE OF PAVEMENT (FT/FT). HEIGHT OF CHECK DAMS SHALL MATCH THE DEPTH OF BALLAST MINIMUM. CHECK DAMS ARE TO BE INSTALLED IN BALLAST LAYER.

1 TYPICAL ASPHALT SECTION
NOT TO SCALE

NOTES:

1) *ROCK WALL SHALL BE BUILT PER SECTION 8-24 OF THE WSDOT STANDARD SPECIFICATIONS.*
2) *FENCE OR ACCEPTABLE ALTERNATIVE SHALL BE REQUIRED IF THE HEIGHT OF THE EXPOSED FACE OF THE WALL IS OVER 30 INCHES.*
3) *SET TOP ROW OF ROCK IN CEMENT CONCRETE GROUT APPROX. 1 INCH THICK.*
4) *H NOT TO EXCEED 5 FEET.*

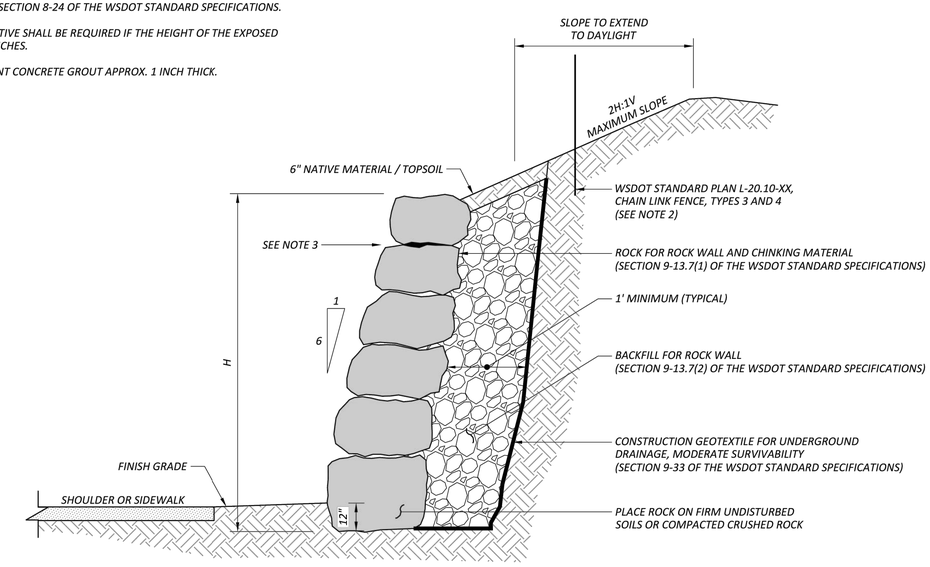

(NOT TO SCALE)

Pierce County
Planning & Public Works
Office of the County Engineer

APPROVED BY: COUNTY ENGINEER

10/17/2022
DATE

ROCK WALL IN CUT

STANDARD DRAWING PC.D1.1

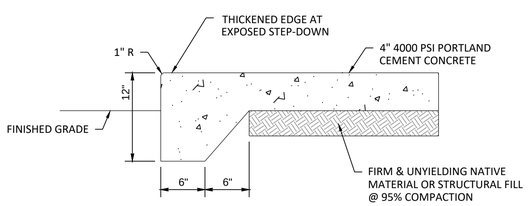

CONCRETE SIDEWALKS SHALL BE IN ACCORDANCE WITH WSDOT STANDARD SPECIFICATION 8-14

2 TYPICAL CONCRETE SIDEWALK SECTION
NOT TO SCALE

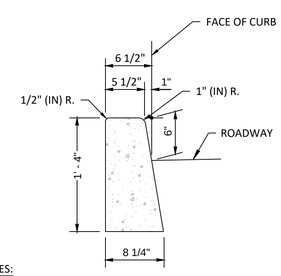

NOTES:

1. PROVIDE FULL DEPTH EXPANSION JOINTS EVERY 24 FT.
2. PROVIDE 1" DEPTH CONTRACTION JOINTS EVERY 7 FT.
3. SEE WSDOT 8-04 & 9-04

4 CEMENT CONCRETE TRAFFIC CURB
NOT TO SCALE

CALL 2 BUSINESS DAYS BEFORE YOU DIG
811
"It's the Law"
www.callbeforeyoudig.com

RICE fergus MILLER
ARCHITECTURE INTERIORS PLANNING VIZLAB
275 FIFTH STREET, SUITE 100
BREMERTON, WA 98337
360-377-8773
RFMARCH.COM

MacKay Sposito
ENERGY PUBLIC WORKS LAND DEVELOPMENT
www.mackaysposito.com

ERIC L. PILCHER
STATE OF WASHINGTON
43952
REGISTERED
PROFESSIONAL ENGINEER
10/12/2023

STATION 57 ADDITION
GIG HARBOR FIRE AND MEDIC ONE

GIG HARBOR, WASHINGTON

PROJECT # 2022010.03

BID SET

ISSUE DATE JANUARY 8, 2024

REVISION SCHEDULE

DETAILS

SHEET #
C04.01

DATE/TIME PRINTED: 10/12/2023 8:05 AM
J:\18017 - GHFMO Station 57\500 Design\502 Drawings\Sheets\18017 - C04.01-C04.02 Details.dwg

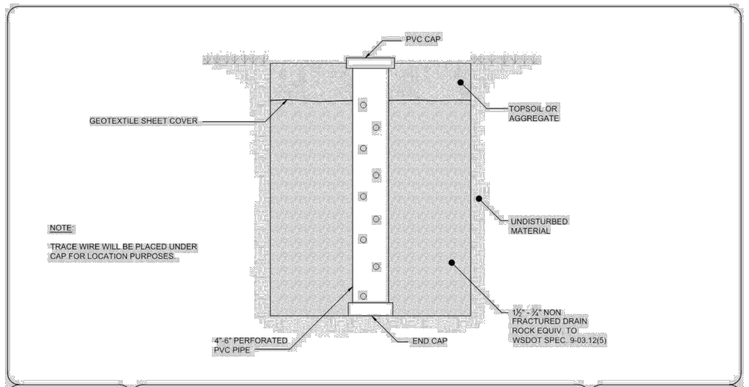

Pierce County
Planning and Public Works
2401 S 35th St.
Tacoma, Washington 98409

OBSERVATION WELL

SECTION A - 15.0

ORDINANCE: 2021-xxx
EFFECTIVE DATE: 7/1/2021

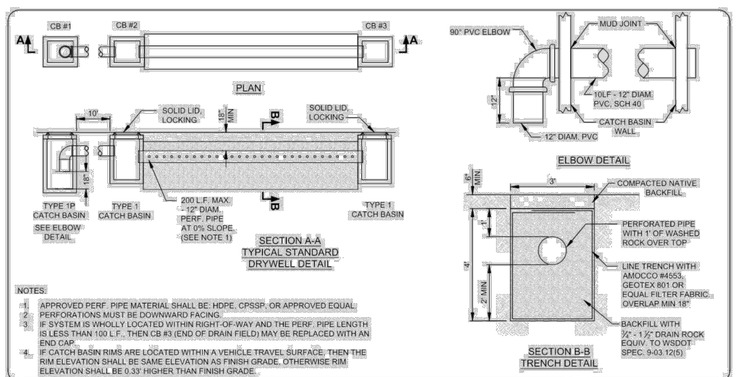

NOTES:
1. APPROVED PERF. PIPE MATERIAL SHALL BE: HDPE, CPSSP, OR APPROVED EQUAL.
2. PERFORATIONS MUST BE DOWNWARD FACING.
3. IF SYSTEM IS WHOLLY LOCATED WITHIN RIGHT-OF-WAY AND THE PERF. PIPE LENGTH IS LESS THAN 100 L.F., THEN CB #3 (END OF DRAIN FIELD) MAY BE REPLACED WITH AN END CAP.
4. IF CATCH BASIN RIMS ARE LOCATED WITHIN A VEHICLE TRAVEL SURFACE, THEN THE RIM ELEVATION SHALL BE SAME ELEVATION AS FINISH GRADE, OTHERWISE RIM ELEVATION SHALL BE 0.33' HIGHER THAN FINISH GRADE.

Pierce County
Planning and Public Works
2401 S 35th St.
Tacoma, Washington 98409

DRYWELL AND TRENCH

SECTION A - 23.0

ORDINANCE: 2021-xxx
EFFECTIVE DATE: 7/1/2021

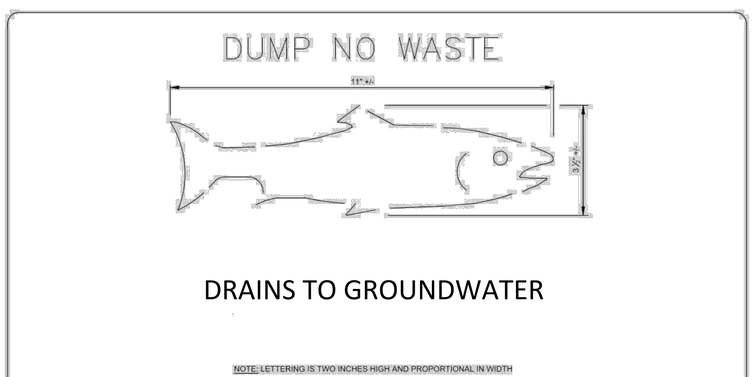

Pierce County
Planning and Public Works
2401 S 35th St.
Tacoma, Washington 98409

CATCH BASIN STENCIL

SECTION A - 22.0

ORDINANCE: 2021-xxx
EFFECTIVE DATE: 7/1/2021

NOTE:
SEWER INFORMATION IS SHOWN FOR COORDINATION PURPOSES AND IS NOT REVIEWED BY DEVELOPMENT ENGINEER.

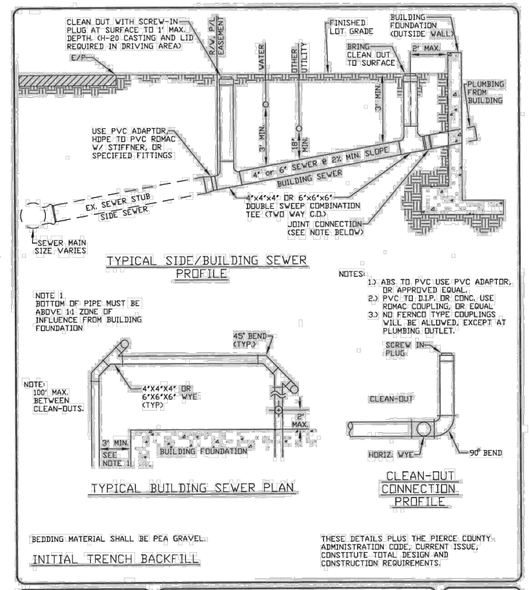

KARL FRANK MEYER
STATE OF WASHINGTON
32160
REGISTERED PROFESSIONAL ENGINEER
12-21-22

PIERCE COUNTY PUBLIC WORKS & UTILITIES DEPARTMENT
SEWER UTILITY DIVISION
9850 64TH STREET WEST
UNIVERSITY PLACE, WASHINGTON 98467-1078
(253) 798-4050

STANDARD DETAILS

DATE 05/01/2011
SCALE NTS

BUILDING SEWER LAYOUT

STANDARD DETAIL NO. 4001
PAGE 1 OF 2

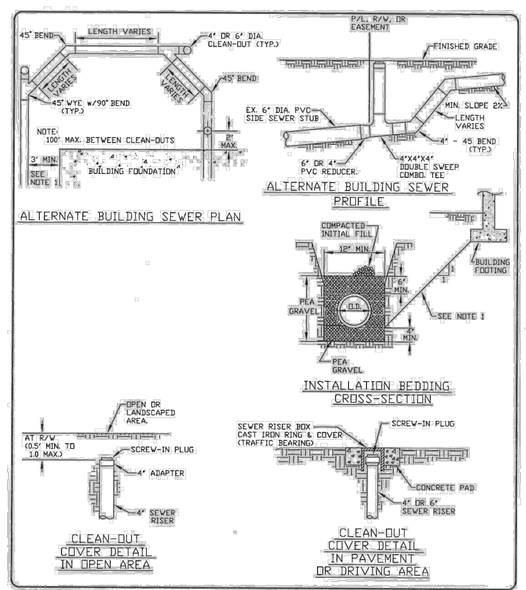

KARL FRANK MEYER
STATE OF WASHINGTON
32160
REGISTERED PROFESSIONAL ENGINEER
12-21-22

PIERCE COUNTY PUBLIC WORKS & UTILITIES DEPARTMENT
SEWER UTILITY DIVISION
9850 64TH STREET WEST
UNIVERSITY PLACE, WASHINGTON 98467-1078
(253) 798-4050

STANDARD DETAILS

DATE 05/01/2011
SCALE NTS

BUILDING SEWER LAYOUT

STANDARD DETAIL NO. 4001
PAGE 2 OF 2

PRIVATE IMPROVEMENTS

1011485
PERMIT #

DEVELOPMENT ENGINEER

DATE

PIERCE COUNTY ORDINANCE NOs: STORM 2021-45 ROAD

1. A PRE-CONSTRUCTION MEETING SHALL BE REQUESTED AT LEAST 48-HOURS IN ADVANCE OF THE START OF CONSTRUCTION. CONTACT LARRY FREMONT, THE AREA INSPECTOR, AT 253-798- 7187.
2. APPOINT A CERTIFIED EROSION AND SEDIMENT CONTROL LEAD WHO SHALL BE PROVIDED A COPY OF THE SWPPP, EROSION CONTROL PLAN & INSPECTION SCHEDULE.
3. FAILURE TO OBTAIN REQUIRED INSPECTIONS MAY ENDANGER OR DELAY PROJECT APPROVAL.
4. ALL WORK IN THE PUBLIC RIGHT-OF-WAY REQUIRES A GENERAL RIGHT-OF-WAY PERMIT FROM PIERCE COUNTY PLANNING AND PUBLIC WORKS.

RICE fergus MILLER
ARCHITECTURE INTERIORS PLANNING VIZLAB
275 FIFTH STREET, SUITE 100
BREMERTON, WA 98337
360-377-8773
RFMARCH.COM

MacKay Sposito
ENERGY PUBLIC WORKS LAND DEVELOPMENT
www.mackaysposito.com

ERIC L. PILCHER
STATE OF WASHINGTON
43952
REGISTERED PROFESSIONAL ENGINEER
10/12/2023

STATION 57 ADDITION
GIG HARBOR FIRE AND MEDIC ONE
GIG HARBOR, WASHINGTON

PROJECT # 2022010.03

BID SET

ISSUE DATE JANUARY 8, 2024

REVISION SCHEDULE

DETAILS

SHEET #
C04.02

A FREE SERVICE
CALL 2 BUSINESS DAYS BEFORE YOU DIG
811
"It's the Law"
www.callbeforeyoudig.com

DATE/TIME PRINTED: 10/12/2023 8:06 AM
J:\18017 - GHFMO Station 57\500 Design\502 Drawings\Sheets\18017 - C04.01-C04.02 Details.dwg

LEGEND

- HYDROSEED LAWN, SEE SPECIFICATIONS SECTION 329200 (OR SOD LAWN)
- 2" DEPTH BARK MULCH DISTURBED AREAS ALONG WALL/FOUNDATION, TYP.
- 5/8"- COMPACTED GRAVEL DUMPSTER PAD, SEE SHEET A12.01
- SMALL COBBLE RIVER ROCK MULCH BED, 6" DEPTH w/ NON-WOVEN WEED BARRIER FABRIC THROUGHOUT

KEY NOTES

1. FENCED DUMPSTER ENCLOSURE, SEE SHEET A12.01.
2. CONTRACTOR TO RELOCATE ALL EX. IRRIGATION HEADS, WIRING, EQUIPMENT ETC. DUE TO BUILDING, PAVING AND DUMPSTER REVISIONS. ENSURE A FULLY OPERATIONAL SYSTEM WITH FULL COVERAGE AT COMPLETION OF CONSTRUCTION. EXTEND SLEEVING/CONDUITS AS REQUIRED.
3. RESTORE DISTURBED LAWN AREAS, 3" DEPTH OF IMPORT TOPSOIL AND LAWN SEED.
4. PROTECT EX. LAWN AREAS AND IRRIGATION DURING CONSTRUCTION EXCEPT WHERE PROPOSED RESTORED LAWN AREAS ARE SHOWN.
5. EX. WATER METER TO REMAIN IN USE, PROTECT DURING CONSTRUCTION.

PRIVATE IMPROVEMENTS

XXXXXX
PERMIT #

DEVELOPMENT ENGINEER

DATE

PIERCE COUNTY ORDINANCE NOs: STORM 2021-45 ROAD

1. A PRE-CONSTRUCTION MEETING SHALL BE REQUESTED AT LEAST 48-HOURS IN ADVANCE OF THE START OF CONSTRUCTION. CONTACT ROGER JERNEGAN, THE AREA INSPECTOR, AT 253-798-4062.
2. APPOINT A CERTIFIED EROSION AND SEDIMENT CONTROL LEAD WHO SHALL BE PROVIDED A COPY OF THE SWPPP, EROSION CONTROL PLAN & INSPECTION SCHEDULE.
3. FAILURE TO OBTAIN REQUIRED INSPECTIONS MAY ENDANGER OR DELAY PROJECT APPROVAL.
4. ALL WORK IN THE PUBLIC RIGHT-OF-WAY REQUIRES A GENERAL RIGHT-OF-WAY PERMIT FROM PIERCE COUNTY PLANNING AND PUBLIC WORKS.

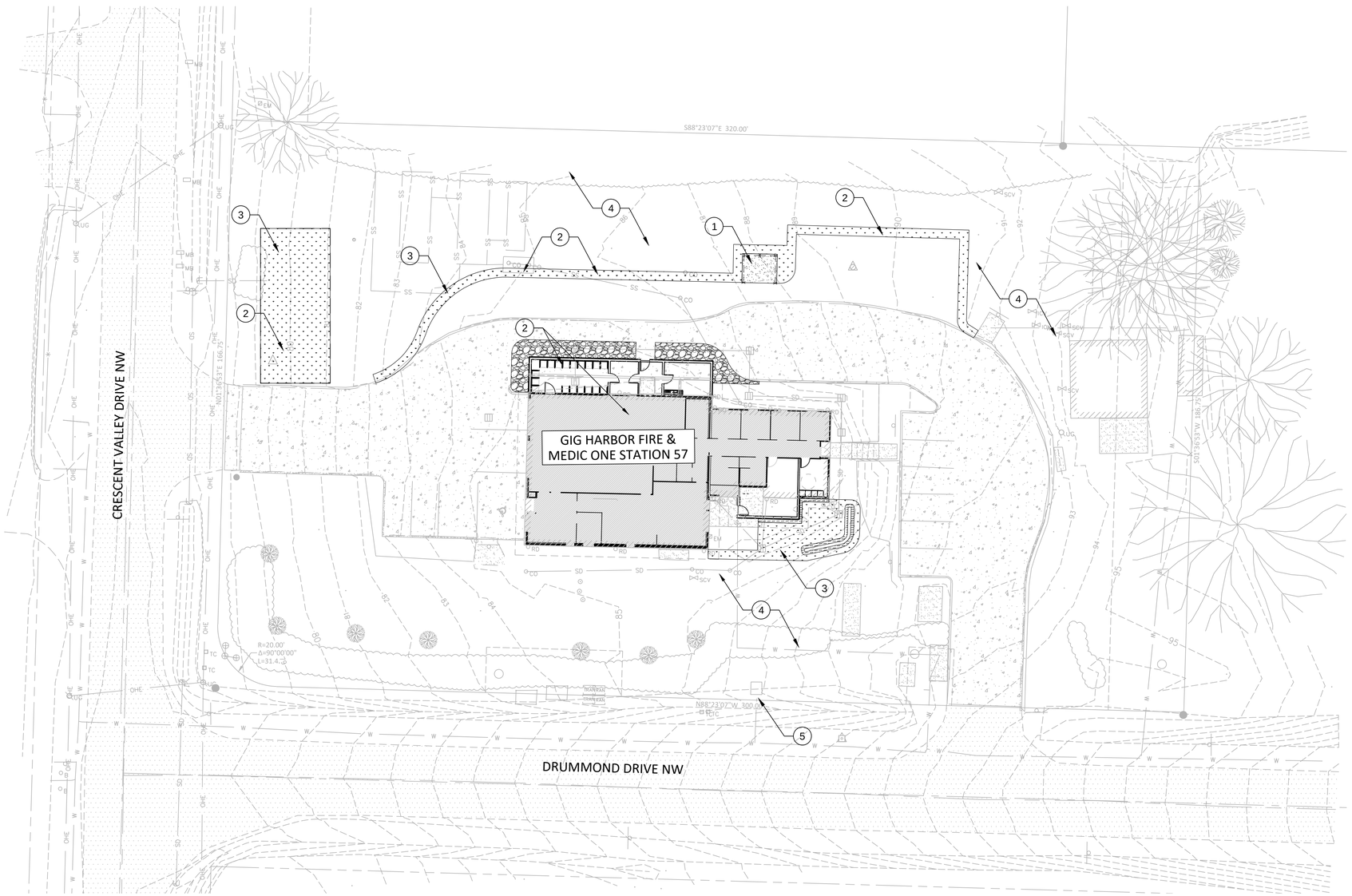

0 20 40
SCALE: 1" = 20'

CALL 2 BUSINESS DAYS BEFORE YOU DIG
811
"It's the Law"
www.callbeforeyoudig.com

RICE fergus MILLER
ARCHITECTURE INTERIORS PLANNING VIZLAB
275 FIFTH STREET, SUITE 100
BREMERTON, WA 98337
360-377-8773
RFMARCH.COM

MacKay Sposito
ENERGY PUBLIC WORKS LAND DEVELOPMENT
www.mackaysposito.com

STATE OF WASHINGTON
MICHAEL J. DAVIS
LICENSED LANDSCAPE ARCHITECT

STATION 57 ADDITION
GIG HARBOR FIRE AND MEDIC ONE
GIG HARBOR, WASHINGTON

PROJECT # 2022010.03
JANUARY 8, 2024
BID SET
ISSUE DATE OCTOBER 6, 2023

REVISION SCHEDULE

LANDSCAPE PLAN

SHEET #
L01.01

DATE/TIME PRINTED: 10/11/2023 12:03 PM
J:\18017 - GHFMO Station 57\500 Design\502 Drawings\Sheets\Landscape\18017 - L01.00 Landscape Site Plan.dwg

GENERAL NOTES

1. THIS PROJECT INCLUDES REMOVAL, HANDLING AND DISPOSAL OF REGULATED BUILDING MATERIALS INCLUDING LEAD-CONTAINING PAINT (LCP), ARSENIC-CONTAINING CONCRETE, AND ASSUMED ASBESTOS FOR THE FIRE STATION 57 RENOVATION PROJECT IN GIG HARBOR, WASHINGTON.

2. THE GENERAL CONTRACTOR SHALL COORDINATE WORK BETWEEN ALL DISCIPLINES AS STATED THROUGHOUT THE DRAWINGS AND SPECIFICATIONS. REGULATED MATERIALS ABATEMENT AND/OR CONTROL PROCEDURES ARE NOT SPECIFIC REQUIREMENTS OF ONE SUBCONTRACTOR; INSTEAD, THESE CONTROLS AND MONITORING REQUIREMENTS ARE REQUIRED OF THE GENERAL CONTRACTOR AND ALL SUBCONTRACTORS.

3. ALL WORK TO BE PERFORMED IN ACCORDANCE WITH APPLICABLE CODES, STANDARDS, REGULATIONS AND ACCEPTED INDUSTRY PRACTICES. ALL WORK INCLUDING WORK PRACTICES ARE TO BE CRAFTSMAN LIKE AND IS SUBJECT TO INSPECTION BY THE OWNER, THE OWNER'S CONSULTANTS, AND REGULATORY PERSONNEL.

4. THE ABATEMENT PROJECT DESIGN IS BASED ON REGULATIONS IN EFFECT AS OF AUGUST OF 2023. IN THE EVENT THAT REGULATIONS CHANGE THAT IMPACT THE ABATEMENT OR WHAT IS ALLOWED FOR ABATEMENT WHEN THE WORK IS SCHEDULED TO BEGIN, CONTRACTOR TO NOTIFY THE OWNER IN WRITING BEFORE WORK BEGINS OF REGULATORY CHANGES.

5. DRAWINGS WERE PROVIDED BY RFM FOR EHSI TO ANNOTATE/SPECIFY LOCATIONS OF HAZMAT IMPACT.

6. ABATEMENT IS ONLY REQUIRED OF IMPACTED HAZARDOUS MATERIALS.

GENERAL NOTES: ASBESTOS-CONTAINING MATERIALS

1. LOCATIONS OF ASSUMED ASBESTOS-CONTAINING MATERIALS (ACM) SHOWN ON THE DRAWINGS ARE SCHEMATIC AND APPROXIMATE. NOTE: A LIMITED HAZARDOUS MATERIALS SURVEY WAS PERFORMED IN PREPARATION FOR THE WORK, WHICH MEETS THE REQUIREMENTS OF WASHINGTON STATE DEPARTMENT OF LABOR AND INDUSTRIES DIVISION OF OCCUPATIONAL SAFETY AND HEALTH (L&I DOSH) "GOOD FAITH INSPECTION" AND PUGET SOUND CLEAN AIR AGENCY (PSCAA) ASBESTOS INSPECTION TO LOCATE AND IDENTIFY ACM AND ASSUMED ACM EXPECTED TO BE IMPACTED BY THE PROJECT.

2. ASSUMED ACM WILL BE REMOVED WITHIN THE SCOPE OF WORK PRIOR TO THE RENOVATION PROJECT. REFER TO THESE DRAWINGS FOR ALL ASSUMED ASBESTOS CONTAINING MATERIALS WITHIN THE SCOPE OF THE SURVEY. IF THE CONTRACTOR DOES NOT INTEND TO REMOVE ALL ASSUMED ACMS PRIOR TO RENOVATION WORK THEN THE WORKPLAN MUST INDICATE WHICH MATERIALS WILL BE REMOVED IN EACH AREA OF WORK. A DETAILED REMOVAL PLAN FOR EACH MATERIAL EXPECTED TO BE REMOVED THROUGHOUT RENOVATION AND DEMOLITION WORK WILL BE REQUIRED TO BE REVIEWED AND APPROVED BY THE OWNER PRIOR TO RENOVATION.

3. DEMOLITION FOR ACCESS TO CONCEALED ACM AND/OR ASSUMED ACM IS WITHIN THE SCOPE OF WORK. NO SEPARATE PAYMENT FOR THIS DEMOLITION SHALL BE MADE. THE COSTS ASSOCIATED WITH THIS WORK SHALL BE INCLUDED IN THE LUMP SUM PRICE OF THE PROJECT.

4. IF ANY ASSUMED ACM OR SUSPECT MATERIAL NOT ADDRESSED BY THE LIMITED HAZARDOUS MATERIALS SURVEY OR THESE DRAWINGS WILL BE IMPACTED, CONSULT THE OWNER OR OWNER'S REPRESENTATIVE PRIOR TO DISTURBANCE. ANY SUCH MATERIAL MUST BE TREATED AS ACM UNLESS SAMPLED BY A CERTIFIED AHERA BUILDING INSPECTOR AND DETERMINED TO BE NON-ASBESTOS. NO PAYMENT FOR REMOVAL OF DISCOVERED MATERIALS WILL BE MADE WITHOUT VERIFICATION PRIOR TO REMOVAL FROM THE BUILDING.

5. USE THE PROJECT HAZARDOUS MATERIALS SUMMARY LISTED ON THE HAZARDOUS MATERIALS QUANTITIES PORTION OF THIS SHEET FOR BASE BID. QUANTITIES ARE CONSIDERED ACCURATE WITHIN PLUS OR MINUS (+/-) TEN PERCENT (10%). NO CONTRACT CHANGES WILL BE CONSIDERED FOR VARIANCES IN THESE QUANTITIES OF LESS THAN 10%.

6. THE CONTRACTOR SHALL FIELD VERIFY AND COORDINATE WITH ARCHITECTURAL, STRUCTURAL, MECHANICAL, ELECTRICAL, AND PLUMBING DETAILS AND DIMENSIONS THAT MAY IMPACT THE WORK. THE CONTRACTOR SHALL VERIFY THE CONDITION, LOCATION, AND QUANTITIES OF HAZARDOUS MATERIALS IN THIS WORK PRIOR TO SUBMITTING A BID.

7. THROUGHOUT THE PROJECT AREA, ASSUMED ACM WILL BE REMOVED TO A CERTAIN POINT, AND STOP LEAVING THAT PARTICULAR ASSUMED ACM REMAINING IN AREAS. AT ALL LOCATIONS WHERE ASSUMED ACMS ARE LEFT BEHIND, OR REMOVAL STOPS AT A CERTAIN POINT, CONTRACTOR SHALL PLACE APPROPRIATE BRIDGING ENCAPSULANT ON THE LEADING EDGE EXTENDING A MINIMUM OF 6" BACK FROM THE LEADING EDGE TO SEAL THE ASSUMED ACM BEING LEFT BEHIND. SUITABLE ACM STICKERS SHALL BE PLACED ON THE ENCAPSULATED LEADING EDGE AT A FREQUENCY OF 1 STICKER EA (FOR PIPE ENDS) OR 1 STICKER EVERY 25' FOR THINGS INCLUDING BUT NOT LIMITED TO THERMAL SYSTEM INSULATION.

GENERAL NOTES: LEAD-CONTAINNG PAINT DISTURBANCE

1. INTERIOR AND EXTERIOR PAINTED/GLAZED SURFACES WERE NOT FOUND TO CONTAIN LEAD [E.G., LEAD-CONTAINING PAINT (LCP) AND/OR LEAD-CONTAINING BUILDING MATERIALS (LCM)]. LCM MAY ALSO INCLUDE THE FOLLOWING: LEAD ROOF VENT PIPES, GLAZING OF CERAMIC WALL AND FLOOR TILES, AND GLAZED BATHROOM FIXTURES, (E.G., SINKS, TOILETS, AND UTILITY SINKS).

2. LEAD CONTROL PROCEDURES ARE NOT SPECIFIC REQUIREMENTS OF ONE SUBCONTRACTOR; INSTEAD, THESE CONTROLS AND MONITORING REQUIREMENTS ARE REQUIRED OF ANY CONTRACTOR DISTURBING LCM OR LCP.

3. THE CONTRACTOR SHALL ASSUME THAT LCP IS PRESENT ON ANY PAINTED BUILDING MATERIALS NOT TESTED. ALL WORK THAT MAY DISTURB LCP OR OTHER LCM SHALL BE IN ACCORDANCE WITH L&I REGULATION WAC 296-155-176, OSHA REGULATION 29 CFR 1926.62, AND THE SPECIFICATIONS, INCLUDING DUST CONTROL, EMPLOYEE EXPOSURE ASSESSMENTS AND WASTE CHARACTERIZATION.

4. IT IS ASSUMED THAT SOME BUILDING DEBRIS WILL BE RECYCLED, OTHER DEBRIS WILL BE DISPOSED. CONTRACTOR'S DISPOSAL CHARACTERIZATION SHALL INCLUDE TESTING FOR EACH WASTE OR RECYCLE STREAM PRIOR TO REMOVAL FROM SITE.

5. RECYCLED METALS DEBRIS THAT IS HAULED OFF SITE SHALL BE PACKAGED IN A MANNER AS TO ENSURE THAT PEELING OR CHIPPING PAINT WILL NOT FLAKE OFF DURING TRANSPORT AND IS MANAGED DURING TRANSPORT. DETAILS OF HOW RECYCLED METAL WASTE WILL BE MANAGED FROM SITE TO METALS RECYCLER WILL BE INCLUDED IN THE WORK PLAN.

GENERAL NOTES: ARSENIC-CONTAINING CONCRETE

1. THE CONCRETE FOUNDATION FOR FIRE STATION 57 WAS FOUND TO CONTAIN ARSENIC CONTAMINATION RANGING FROM <13 TO 65 PPM. THE MODEL TOXICS CONTROL ACT (MCTA) METHOD A CLEANUP LEVEL IN SOIL IS 20 PPM FOR ARSENIC. ALL WORK THAT MAY DISTURB THE CONCRETE FOUNDATION WITH ARSENIC CONTAMINATION SHALL BE PERFORMED IN ACCORDANCE WITH L&I DOSH REGULATIONS WAC 296-848, AND WAC 173-303 AND THE SPECIFICATIONS, INCLUDING DUST CONTROL, EMPLOYEE EXPOSURE ASSESSMENTS AND WASTE CHARACTERIZATION.

2. REFER TO UNIVERSAL OTHER REGULATED WASTE ACTIVITIES SPECIFICATIONS, SECTION 02 84 17, FOR ARSENIC IN SOIL DISTURBANCES, DISPOSAL, AND TESTING REQUIREMENTS.

GENERAL NOTES: MERCURY-CONTAINNG LIGHT TUBES AND PCB-CONTAINING LIGHT BALLASTS

1. INSPECT ALL IMPACTED LIGHT BALLASTS IN THE AREA, ALL IMPACTED MAGNETIC BALLASTS REGARDLESS OF LABELING AS "NO-PCBS" OR "PCB FREE", WILL BE REMOVED AND DISPOSED OF AS HAZARDOUS WASTE IN ACCORDANCE WITH THE REGULATIONS AND THE CONTRACTOR'S APPROVED WORK PLAN. PARTIAL DISASSEMBLY OF FLUORESCENT FIXTURES AND SELECTIVE DEMOLITION FOR ACCESS ARE INCLUDED IN THE SCOPE OF WORK. REFER TO CONTRACT SPECIFICATIONS/DRAWINGS, REGULATIONS, AND CONTRACTOR'S APPROVED WORK PLAN FOR PCB-BALLAST REMOVAL AND DISPOSAL PROCEDURES. HID LIGHTS ARE ASSUMED TO CONTAIN PCB-BALLASTS AND MERCURY-CONTAINING BULBS. BALLASTS LABELED "ELECTRONIC" MAY BE DISPOSED AS CONSTRUCTION DEBRIS.

2. ALL FLUORESCENT LIGHT TUBES AND HID LAMPS CONTAIN MERCURY AND WILL BE RECYCLED IN ACCORDANCE WITH THE CONTRACT SPECIFICATIONS AND WITHOUT BREAKAGE ON SITE. REFER TO THE CONTRACT SPECIFICATIONS, REGULATIONS, AND THE CONTRACTOR'S APPROVED WORK PLAN FOR LIGHT TUBE/HID LAMP RECYCLING PROCEDURES.

3. THE ELECTRICAL CONTRACTOR IS RESPONSIBLE FOR ELECTRICAL ISOLATION OF ALL IMPACTED LIGHT FIXTURES AND THE ABATEMENT CONTRACTOR SHALL VERIFY PRIOR TO COMMENCING WORK.

HAZARDOUS MATERIALS QUANTITIES

QUANTITY/ UNIT	DESCRIPTION
2 EA	ASSUMED ACM FLANGE GASKETS 10"OD
2 EA	ASSUMED ACM FLANGE GASKETS 4"OD
1 EA	ELECTRICAL PANEL 1'X3' WITH ASSUMED ACM INTERNAL COMPONENTS
2 EA	ELECTRICAL PANEL 1'X2' WITH ASSUMED ACM INTERNAL COMPONENTS
1 EA	ELECTRICAL PANEL 1'X4' WITH ASSUMED ACM INTERNAL COMPONENTS
2 EA	METAL ROLL-UP DOOR OPENER WITH ASSUMED ACM INTERNAL COMPONENTS
500 LF	HVAC SYSTEM WITH ASSUMED ACM INSULATION
2 EA	CFC-CONTAINING HVAC UNITS
60 LF	ASSUMED ACM TSI
12 LF	ASSUMED ACM MUDDED ELBOWS
6 EA	METAL FIRE DOORS (1 HOUR RATING) WITH ASSUMED ACM INTERNALS
20 SF	FIBERGLASS SHOWER WITH ASSUMED ACM MASTIC
25 EA	MERCURY-CONTAINING LIGHT TUBES
4,000 SF	ARSENIC-CONTAINING CONCRETE FOUNDATION

ABBREVIATIONS

ACM - ASBESTOS-CONTAINING MATERIAL
AHERA - ASBESTOS HAZARD EMERGENCY RESPONSE ACT
BLDG - BUILDING
CFC - CHLOROFLUOROCARBON
CFR - CODE OF FEDERAL REGULATIONS
EA - EACH
EHSI - EHS-INTERNATIONAL, INC
HVAC - HEATING VENTILATION AIR CONDITIONING
L&I DOSH - WASHINGTON STATE LABOR & INDUSTRIES DEPARTMENT OF SAFETY & HEALTH
LCM - LEAD-CONTAINING MATERIALS
LCP - LEAD-CONTAINING PAINT
MTCA - MODEL TOXICS CONTROL ACT
OSHA - OCCUPATIONAL SAFETY AND HEALTH ADMINISTRATION
PPM - PARTS PER MILLION
RFM - RICE FERGUS MILLER
SF - SQUARE FEET
TSI - THERMAL SYSTEM INSULATION
TYP - TYPICAL
USEPA - UNITED SATES ENVIRONMENTAL PROTECTION AGENCY
WAC - WASHINGTON ADMINISTRATIVE CODE

SHEET INDEX

HA001	HAZMAT GENERAL NOTES AND INFORMATION
HA101	HAZMAT GENERAL PLAN
HA102	HAZMAT IMPACTED MECHANICAL PLAN
HA103	HAZMAT IMPACTED LIGHTING PLAN
HA104	HAZMAT IMPACTED FOUNDATION PLAN

ehsi
A Subsidiary of SoundEarth Strategies
1011 SW Klickitat Way, Suite 104
Seattle, Washington 98134
Ph: 206.381.1128
Fax: 206.254.4279

RICEfergusMILLER
ARCHITECTURE INTERIORS PLANNING VIZLAB
275 FIFTH STREET, SUITE 100
BREMERTON, WA 98337
360-377-8773
RFMARCH.COM

AHERA PROJECT DESIGNER
JOHN M. HARRIS
CERT. No. 187925
08/23/2024
Expires 8/14/2025

PROJECT INFO:
GIG HARBOR
FIRE AND MEDIC ONE
STATION 57

10521 CRESCENT VALLEY DRIVE NW
GIG HARBOR, WA

EHSI PROJECT #
11630

PROJECT MANAGER:
S. BENZINA

DRAWN BY:
F. DIMALANTA

SCALE:
AS NOTED

0'-1"

WHEN PRINTED AT FULL-SIZE THIS BOX SHOULD MEASURE 1 INCH ACROSS.

REVISIONS
DATE DESCRIPTION

ISSUE DATE:
01/08/2024

SUBMITTAL:
BID SET

TITLE:
HAZMAT GENERAL NOTES AND INFORMATION

SHEET NO.
HA001

SHEET: 1 OF 5

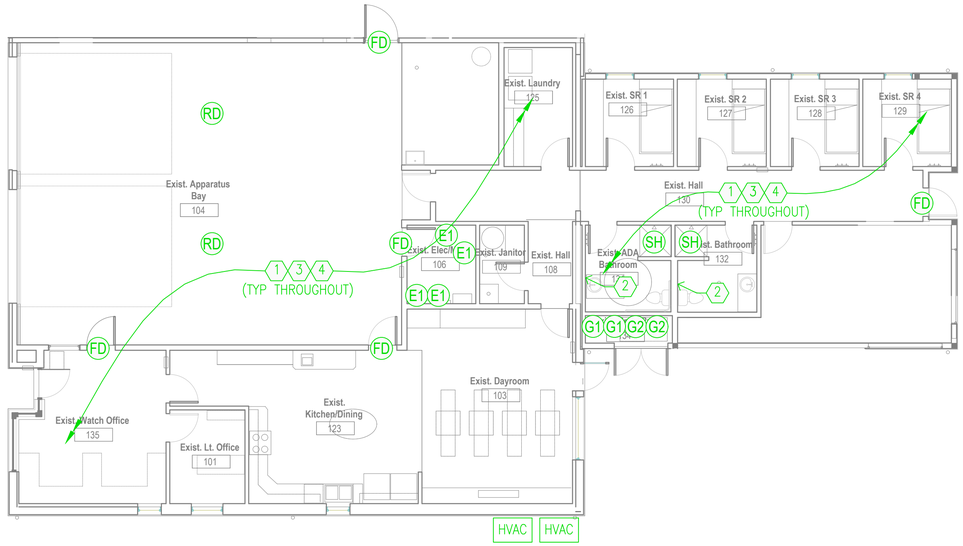

1 HA101 HAZMAT PLAN

1/8" = 1'-0"

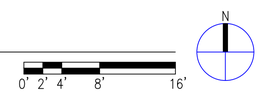

GENERAL NOTES

1. FOR HAZMAT GENERAL NOTES SEE SHEET HA001.
2. DRAWING IS SCHEMATIC AND LOCATIONS OF HAZARDOUS MATERIALS ARE APPROXIMATE AND NOT TO SCALE.
3. ABATEMENT IS ONLY REQUIRED OF IMPACTED HAZARDOUS MATERIALS.
4. AS-BUILT BACKGROUND DRAWING WAS PREPARED BY OTHERS, EHSI MAKES NO WARRANTY AS TO ITS ACCURACY.

SHEET NOTES

1. REMOVE AND DISPOSE OF IMPACTED ARSENIC-CONTAINING CONCRETE. SEE ALSO SHEET HA104.
2. REMOVE AND DISPOSE OF IMPACTED ASSUMED ACM TSI & MUDDED ELBOWS CONCEALED BEHIND WALLS.
3. REMOVE AND DISPOSE OF HVAC SYSTEMS (DUCTWORK) WITH ASSUMED ACM INSULATION. SEE ALSO SHEET HA102.
4. REMOVE AND RECYCLE IMPACTED MERCURY-CONTAINING FLUORESCENT LIGHT TUBES. SEE ALSO SHEET HA103.

LEGEND

G1	ASSUMED ACM FLANGE GASKETS, 10" OD
G2	ASSUMED ACM FLANGE GASKETS, 4" OD
E1	ELECTRICAL PANEL WITH ASSUMED ACM INTERNAL COMPONENTS (SIZES VARY 1'X2' - 1'X4')
RD	METAL ROLL-UP DOOR OPENER WITH ASSUMED ACM INTERNAL COMPONENTS
SH	FIBERGLASS SHOWER WITH ASSUMED ACM MASTIC
FD	METAL FIRE DOORS WITH ASSUMED ACM INTERNALS
HVAC	EXTERIOR MOUNTED CFC-CONTAINING HVAC UNITS

NOTES, CROSS-HATCHINGS AND ICONS SHOWN ABOVE REFER ONLY TO HAZMAT ITEMS LAID OUT ON THIS SHEET.

ehsi
A Subsidiary of SoundEarth Strategies
1011 SW Klickitat Way, Suite 104
Seattle, Washington 98134
Ph: 206.381.1128
Fax: 206.254.4279

RICEfergusMILLER
ARCHITECTURE INTERIORS PLANNING VIZLAB
275 FIFTH STREET, SUITE 100
BREMERTON, WA 98337
360-377-8773
RFMARCH.COM

WA STATE PROJECT DESIGNER
JOHN M. HARRIS
CERT. No. 187825
Jonice Harris
04/14/2023
08/23/2024

PROJECT INFO:
GIG HARBOR
FIRE AND MEDIC ONE
STATION 57

10521 CRESCENT VALLEY DRIVE NW
GIG HARBOR, WA

EHSI PROJECT #
11630

PROJECT MANAGER:
S. BENZINA

DRAWN BY:
F. DIMALANTA

SCALE:
AS NOTED

0'-1"

WHEN PRINTED AT FULL-SIZE THIS BOX SHOULD MEASURE 1 INCH ACROSS.

REVISIONS

#	DATE	DESCRIPTION

ISSUE DATE:
01/08/2024

SUBMITTAL:
BID SET

TITLE:
HAZMAT
GENERAL PLAN

SHEET NO.
HA101

SHEET: 2 OF 5

1 IMPACTED MECHANICAL PLAN

HA102

1/8" = 1'-0"

0' 2' 4' 8' 16'

N

GENERAL NOTES

1. FOR HAZMAT GENERAL NOTES SEE SHEET HA001.
2. DRAWING IS SCHEMATIC AND LOCATIONS OF HAZARDOUS MATERIALS ARE APPROXIMATE AND NOT TO SCALE.
3. BACKGROUND DRAWING WAS PREPARED BY OTHERS, EHSI MAKES NO WARRANTY AS TO ITS ACCURACY.
4. MECHANICAL ABATEMENT WORK SHALL BE COORDINATED WITH MECHANICAL SHEET M22.01.
5. BACKGROUND DRAWING IS REFLECTIVE OF THE PROPOSED DESIGN, AND NOT NECESSARILY THAT OF THE AS-BUILT CONDITIONS.

SHEET NOTES

1. REMOVE AND DISPOSE OF HVAC SYSTEMS (DUCTWORK) WITH ASSUMED ACM INSULATION.

ehsi
A Subsidiary of SoundEarth Strategies
1011 SW Klickitat Way, Suite 104
Seattle, Washington 98134
Ph: 206.381.1128
Fax: 206.254.4279

RICEfergusMILLER
ARCHITECTURE INTERIORS PLANNING VIZLAB
275 FIFTH STREET, SUITE 100
BREMERTON, WA 98337
360-377-8773
RFMARCH.COM

WA PROJECT DESIGNER
JOHN M. HARRIS
CERT. No. 187825
04/14/2023
08/23/2024

PROJECT INFO:
GIG HARBOR
FIRE AND MEDIC ONE
STATION 57

10521 CRESCENT VALLEY DRIVE NW
GIG HARBOR, WA

EHSI PROJECT #
11630

PROJECT MANAGER:
S. BENZINA

DRAWN BY:
F. DIMALANTA

SCALE:
AS NOTED

0'-1"

WHEN PRINTED AT FULL-SIZE THIS BOX SHOULD MEASURE 1 INCH ACROSS.

REVISIONS

#	DATE	DESCRIPTION

ISSUE DATE:
01/08/2024

SUBMITTAL:
BID SET

TITLE:
HAZMAT
IMPACTED
MECHANICAL PLAN

SHEET NO.
HA102

SHEET: 3 OF 5

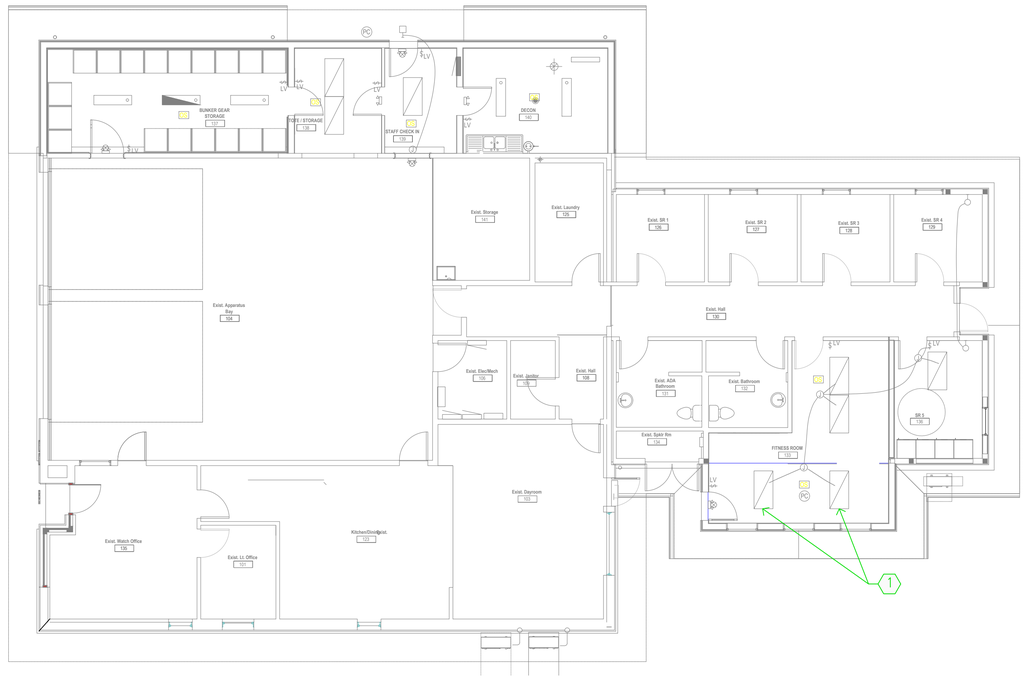

1 IMPACTED LIGHTING PLAN

HA103

1/8" = 1'-0"

0' 2' 4' 8' 16'

N

GENERAL NOTES

1. FOR HAZMAT GENERAL NOTES SEE SHEET HA001.
2. DRAWING IS SCHEMATIC AND LOCATIONS OF HAZARDOUS MATERIALS ARE APPROXIMATE AND NOT TO SCALE.
3. BACKGROUND DRAWING WAS PREPARED BY OTHERS, EHSI MAKES NO WARRANTY AS TO ITS ACCURACY.
4. ELECTRICAL ABATEMENT WORK SHALL BE COORDINATED WITH MECHANICAL SHEET E2.01.
5. BACKGROUND DRAWING IS REFLECTIVE OF THE PROPOSED DESIGN, AND NOT NECESSARILY THAT OF THE AS-BUILT CONDITIONS.

SHEET NOTES

1. LIGHT FIXTURES THAT ARE ANTICIPATED TO BE RELOCATED. ANY MERCURY-CONTAINING FLUORESCENT LIGHT TUBES THAT ARE NOT RE-USED MUST BE RECYCLED.

ehsi
A Subsidiary of SoundEarth Strategies
1011 SW Klickitat Way, Suite 104
Seattle, Washington 98134
Ph: 206.381.1128
Fax: 206.254.4279

RICE fergus MILLER
ARCHITECTURE INTERIORS PLANNING VIZLAB
275 FIFTH STREET, SUITE 100
BREMERTON, WA 98337
360-377-8773
RFMARCH.COM

AIA PROJECT DESIGNER
JOHN M. HARRIS
CERT. No. 187825
08/23/2024
John Harris
4/14/2023

PROJECT INFO:
GIG HARBOR
FIRE AND MEDIC ONE
STATION 57

10521 CRESCENT VALLEY DRIVE NW
GIG HARBOR, WA

EHSI PROJECT #
11630

PROJECT MANAGER:
S. BENZINA

DRAWN BY:
F. DIMALANTA

SCALE:
AS NOTED

0'-1"

WHEN PRINTED AT FULL-SIZE THIS BOX SHOULD MEASURE 1 INCH ACROSS.

REVISIONS

#	DATE	DESCRIPTION

ISSUE DATE:
01/08/2024

SUBMITTAL:
BID SET

TITLE:
HAZMAT
IMPACTED
ELECTRICAL PLAN

SHEET NO.
HA103

SHEET: 4 OF 5

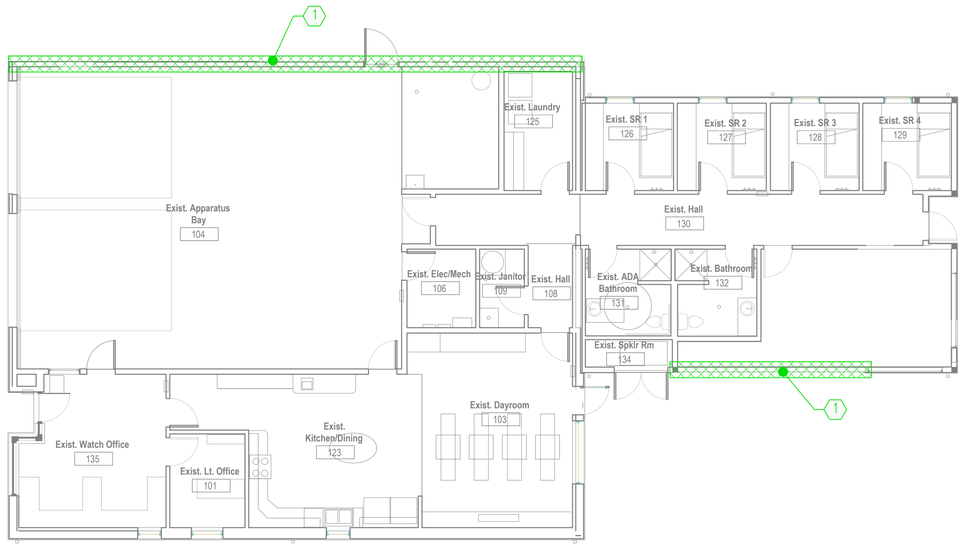

1 HAZMAT PLAN

HA104

1/8" = 1'-0"

0' 2' 4' 8' 16'

N

GENERAL NOTES

1. FOR HAZMAT GENERAL NOTES SEE SHEET HA001.
2. DRAWING IS SCHEMATIC AND LOCATIONS OF HAZARDOUS MATERIALS ARE APPROXIMATE AND NOT TO SCALE.
3. AS-BUILT BACKGROUND DRAWING WAS PREPARED BY OTHERS, EHSI MAKES NO WARRANTY AS TO ITS ACCURACY.

SHEET NOTES

1. REMOVE AND DISPOSE OF IMPACTED ARSENIC-CONTAINING CONCRETE.

LEGEND

ARSENIC-CONTAINING CONCRETE FOUNDATION

NOTES, CROSS-HATCHINGS AND ICONS SHOWN ABOVE REFER ONLY TO HAZMAT ITEMS LAID OUT ON THIS SHEET.

ehsi
A Subsidiary of SoundEarth Strategies
1011 SW Klickitat Way, Suite 104
Seattle, Washington 98134
Ph: 206.381.1128
Fax: 206.254.4279

RICE fergus MILLER
ARCHITECTURE INTERIORS PLANNING VIZLAB
275 FIFTH STREET, SUITE 100
BREMERTON, WA 98337
360-377-8773
RFMARCH.COM

WASHINGTON STATE PROJECT DESIGNER
JOHN M. HARRIS
CERT. No. 187825
04/14/2023
08/23/2024

PROJECT INFO:
GIG HARBOR
FIRE AND MEDIC ONE
STATION 57

10521 CRESCENT VALLEY DRIVE NW
GIG HARBOR, WA

EHSI PROJECT #
11630

PROJECT MANAGER:
S. BENZINA

DRAWN BY:
F. DIMALANTA

SCALE:
AS NOTED

0'-1"

WHEN PRINTED AT FULL-SIZE THIS BOX SHOULD MEASURE 1 INCH ACROSS.

REVISIONS

#	DATE	DESCRIPTION

ISSUE DATE:
01/08/2024

SUBMITTAL:
BID SET

TITLE:
HAZMAT
IMPACTED
FOUNDATION PLAN

SHEET NO.
HA104

SHEET: 5 OF 5

2018 WA STATE ENERGY CODE (WSEC)

ALL NEW CONSTRUCTION IS TO PROVIDE A THERMAL ENVELOPE (AIR BARRIER) AS DESCRIBED IN:
C402.5 AIR-LEAKAGE - THERMAL ENVELOPE
THE THERMAL ENVELOPE (AIR BARRIER) SHALL COMPLY WITH SECTIONS
C402.5.1 THROUGH **C402.5.8.** (PER WASHINGTON STATE ENERGY CODE - COMMERCIAL 2018 EDITION)

9 AIR BARRIER - EAST ELEVATION
1/16" = 1'-0"

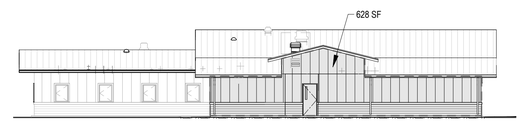

2 AIR BARRIER - NORTH ELEVATION
1/16" = 1'-0"

8 AIR BARRIER - WEST ELEVATION
1/16" = 1'-0"

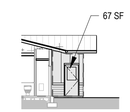

10 PARTIAL WEST ELEV.
1/16" = 1'-0"

AIR BARRIER LEGEND

- AIR BARRIER BOUNDARY
- AIR BARRIER WALL AREA

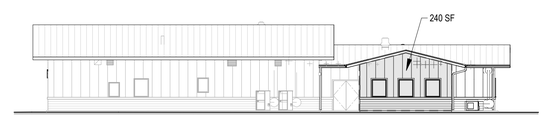

7 AIR BARRIER - SOUTH ELEVATION
1/16" = 1'-0"

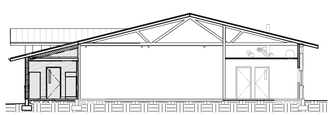

5 AIR BARRIER - SECTION @ S-2
1/16" = 1'-0"

THERMAL ENVELOPE SURFACE AREAS

VERTICAL SURFACES
1,290 SF

HORIZONTAL SURFACES	
R-3 Addition	155 SF
S-2 Addtion	703 SF
S-2 ROOF	656 SF
R-3 ROOF	220 SF
TOTAL	1,733 SF

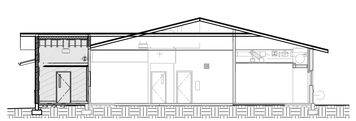

6 AIR BARRIER - SECTION 2 @ S-2 DORMER
1/16" = 1'-0"

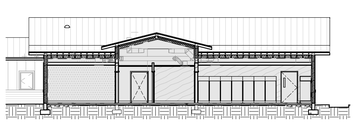

3 AIR BARRIER - LONG SECTION @ S-2
1/16" = 1'-0"

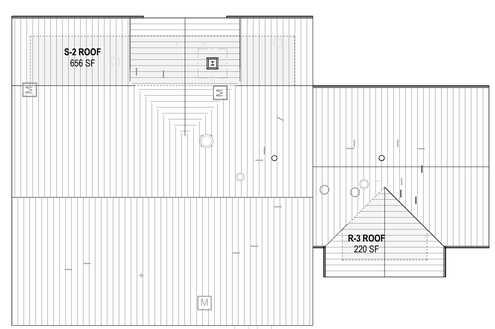

4 AIR BARRIER - ROOF PLAN
1/16" = 1'-0"

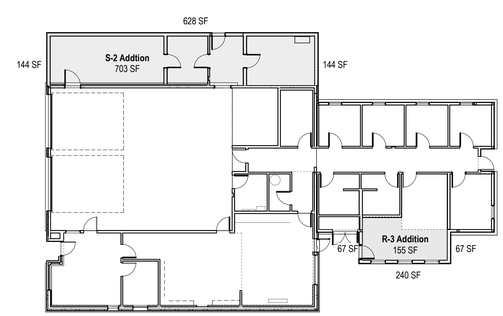

1 AIR BARRIER - FLOOR PLAN
1/16" = 1'-0"

RICE fergus MILLER
ARCHITECTURE INTERIORS PLANNING VIZLAB
275 FIFTH STREET, SUITE 100
BREMERTON, WA 98337
360-377-8773
RFMARCH.COM

22020863
REGISTERED ARCHITECT
GUNNAR R. GLADICS
STATE OF WASHINGTON

STATION 57 ADDITION
GIG HARBOR FIRE AND MEDIC ONE
10521 CRESCENT VALLEY DR. NW
GIG HARBOR, WA 98332

PROJECT #	2022010.03
BID SET	
ISSUE DATE	JANUARY 8, 2024

REVISION SCHEDULE

AHJ APPROVAL STAMP

AIR BARRIER

SHEET #
A02.01

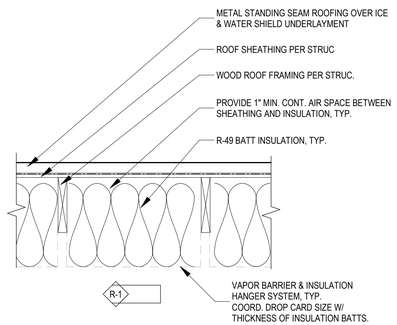

3 ROOF TYPES

1" = 1'-0"

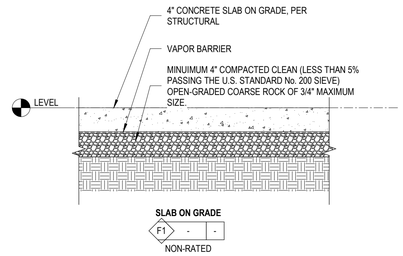

1 FLOOR TYPES

1" = 1'-0"

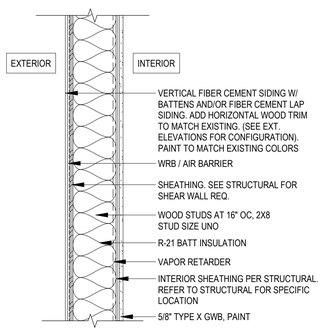

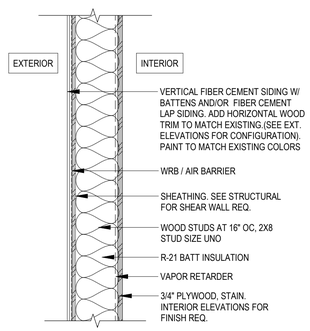

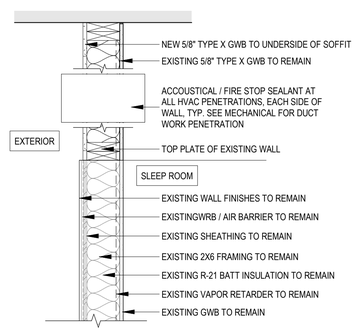

2 EXTERIOR WALLS

1" = 1'-0"

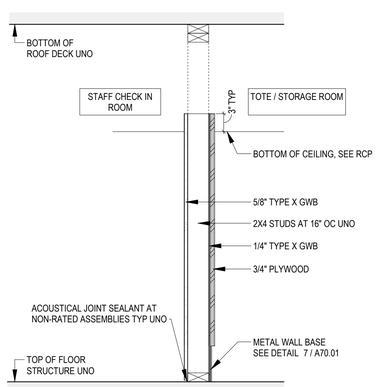

TYP INTERIOR PARTITION
71A - -
NON-RATED

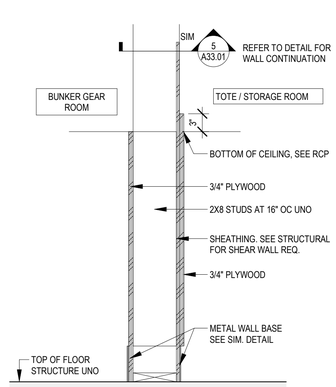

INTERIOR LOAD BEARING WALL
72C
NON-RATED

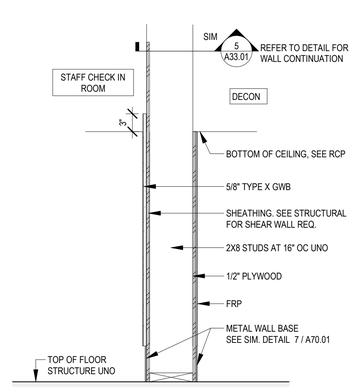

INTERIOR LOAD BEARING WALL
73C
NON-RATED

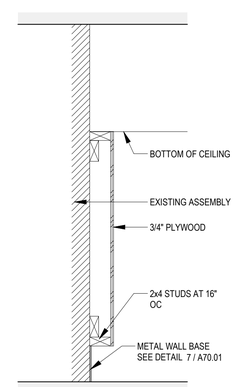

TYP FURRING
75A - -
NON-RATED

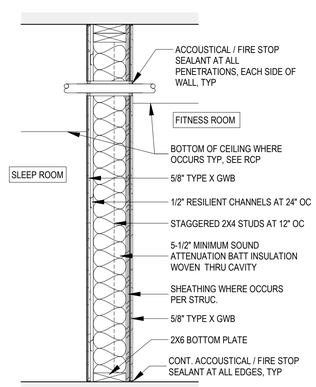

FIRE RATED WALL
76B FP 0.5 HR 50
GA WP 3371

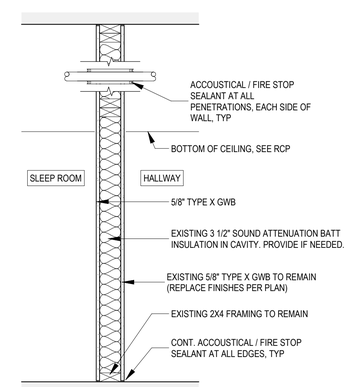

FIRE RATED WALL
73A FP .05 HR 35
IBC (2) 14-1.3

4 INTERIOR PARTITION TYPES

1" = 1'-0"

NOTES & LEGEND - ASSEMBLY TYPES

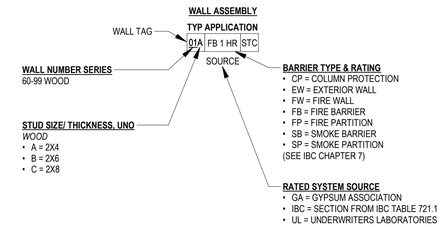

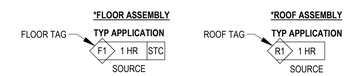

*SEE WALL ASSEMBLY LEGEND FOR SIMILAR CALLOUTS

RATED ASSEBLIES

TERMINATE FIRE RATED ASSEMBLIES AS DESCRIBED BELOW:

FIRE BARRIERS PER IBC 707
VERTICAL OPTIONS:
1. FROM TOP OF FOUNDATION OR HORIZONTAL ASSEMBLY BELOW; TERMINATE AT UNDERSIDE OF STRUCTURAL DECK ABOVE AND SECURELY ATTACHED THERETO.

FIRE PARTITIONS PER IBC 708
FROM TOP OF FOUNDATION OR HORIZONTAL ASSEMBLY BELOW; TERMINATE AT UNDERSIDE OF STRUCTURAL DECK.

DRAFTSTOPPING PER IBC 718.3 & 718.4
DRAFTSTOPPING IS NOT REQUIRED IN BUILDINGS SPRINKLERED THROUGHOUT PER NFPA 13.

AT ALL WALL ASSEMBLIES:
PROVIDE 2X BLOCKING IN PARTITIONS FOR ALL MOUNTED AND RECESSED ITEMS, INCLUDING BUT NO LIMITED TO FIRE EXTINQUISHERS, FE CABINETS, CASEWORK, COUNTERTOPS, SHELVING, WALL STOPS, WHITEBOARDS, TACKBOARDS, MIRRORS, LOCKERS, BUNKER GEAT RACKS, COATHOOKS, OFOI WALL MOUNTED EQUIPMENT AND ALL OFCI WALL MOUNTED ITEMS. HOLLOW WALL ANCHORS AND/OR TOGGLE BOLTS ARE UNACCEPTABLE.

RICE fergus MILLER
ARCHITECTURE INTERIORS PLANNING VIZLAB
275 FIFTH STREET, SUITE 100
BREMERTON, WA 98337
360-377-8773
RFMARCH.COM

22020863
REGISTERED ARCHITECT
GUNNAR R. GLADICS
STATE OF WASHINGTON

STATION 57 ADDITION
GIG HARBOR FIRE AND MEDIC ONE
10521 CRESCENT VALLEY DR. NW
GIG HARBOR, WA 98332

PROJECT # 2022010.03
BID SET
ISSUE DATE JANUARY 8, 2024

REVISION SCHEDULE		

AHJ APPROVAL STAMP

ASSEMBLY TYPES

SHEET #
A03.01

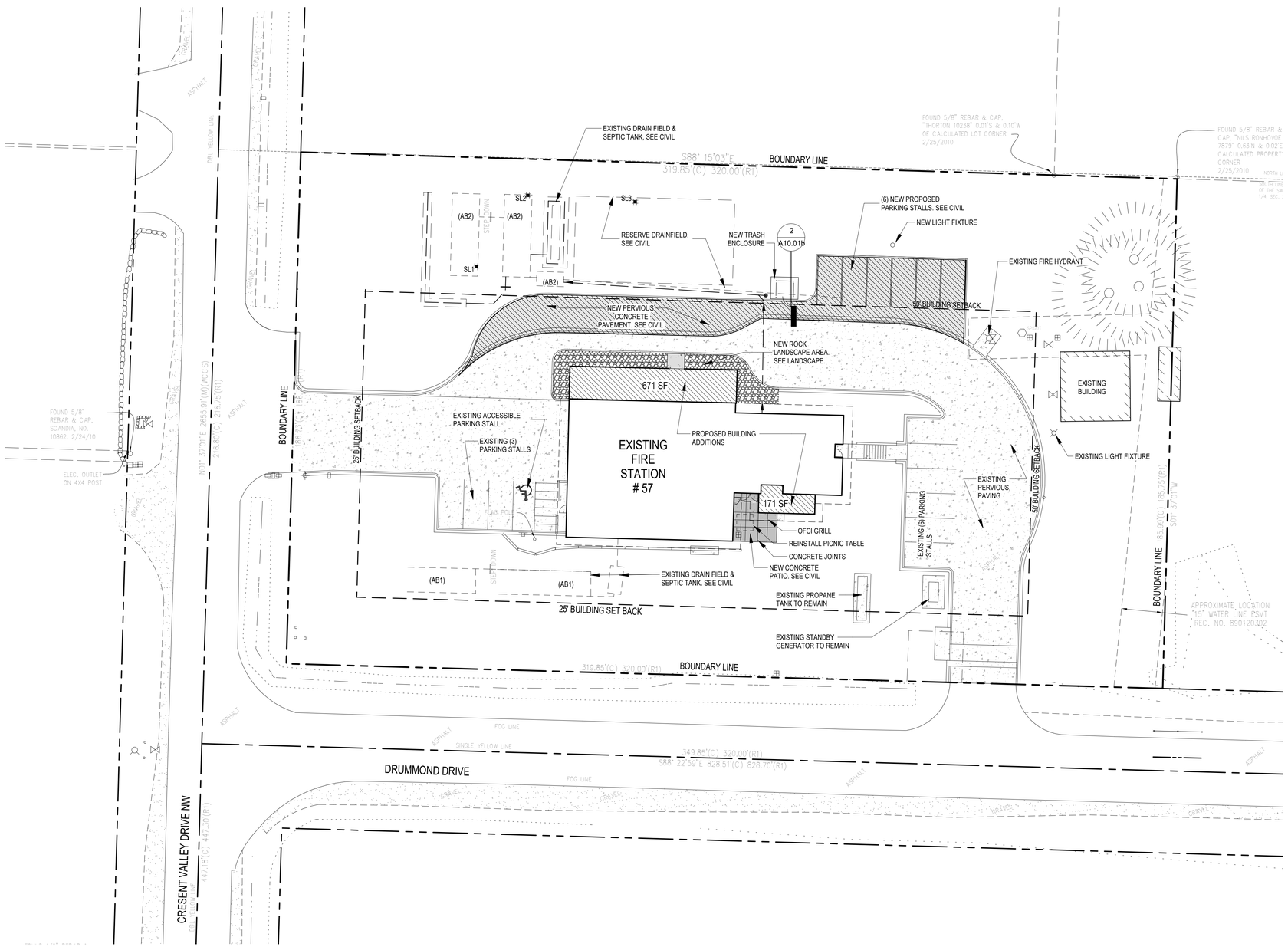

1 ARCHITECTURAL SITE PLAN
1" = 20'-0"

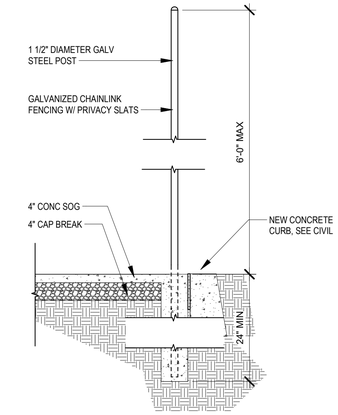

2 TRASH ENCLOSURE SECTION
3/4" = 1'-0"

RICE fergus MILLER
ARCHITECTURE INTERIORS PLANNING VIZLAB
275 FIFTH STREET, SUITE 100
BREMERTON, WA 98337
360-377-8773
RFMARCH.COM

22020863
REGISTERED ARCHITECT
GUNNAR R. GLADICS
STATE OF WASHINGTON

STATION 57 ADDITION
GIG HARBOR FIRE AND MEDIC ONE
10521 CRESCENT VALLEY DR NW
GIG HARBOR, WA

PROJECT #	2022010.02
BID SET	
ISSUE DATE	JANUARY 8, 2024

REVISION SCHEDULE

AHJ APPROVAL STAMP

ARCHITECTURAL SITE PLAN

SHEET #
A10.01b

NOTES & LEGEND - DEMO PLAN

1. FIELD VERIFY EXISTING CONDITIONS. NOTIFY ARCHITECT OF ANY DISCREPANCY PRIOR TO BEGINNING WORK.
2. PRESERVE AND PROTECT EXISTING CONSTRUCTION AND LIFE SAFETY SYSTEMS TO REMAIN.
3. OWNER WILL REMOVE EXISTING FURNITURE, FIXTURES, EQUIPMENT AND ASSOCIATED HARDWARE TO BE SALVAGED PRIOR TO CONSTRUCTION AND STORED DURING CONSTRUCTION WITH OWNER

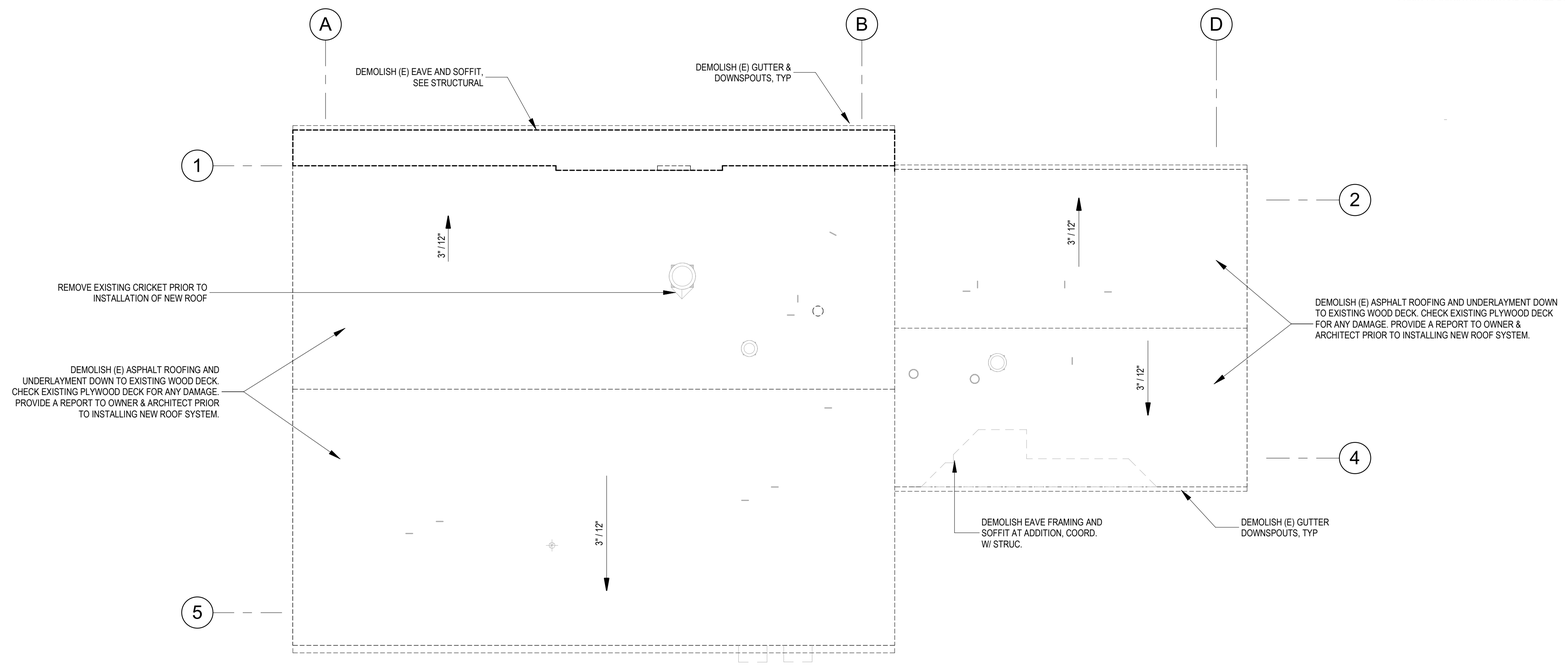

2 DEMOLITION ROOF PLAN

1/8" = 1'-0"

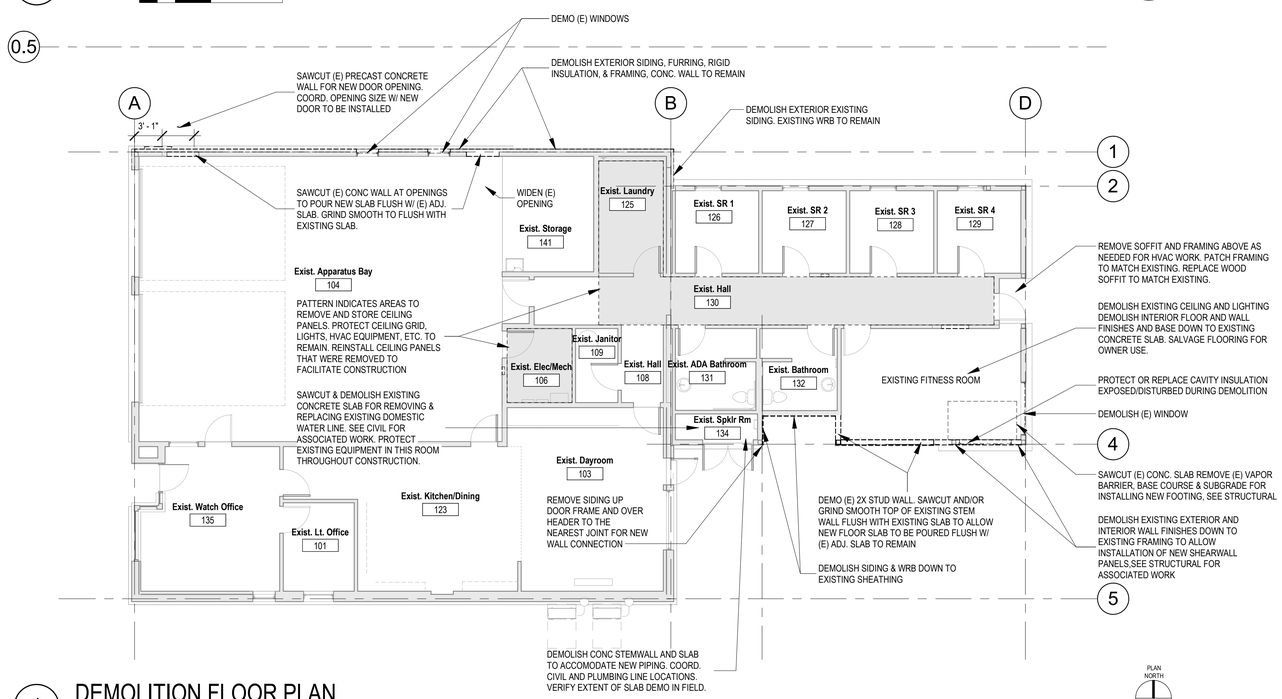

1 DEMOLITION FLOOR PLAN

1/8" = 1'-0"

RICE fergus MILLER
ARCHITECTURE INTERIORS PLANNING VIZLAB
275 FIFTH STREET, SUITE 100
BREMERTON, WA 98337
360-377-8773
RFMARCH.COM

22020863
REGISTERED ARCHITECT
GUNNAR R. GLADICS
STATE OF WASHINGTON

STATION 57 ADDITION
GIG HARBOR FIRE AND MEDIC ONE
10521 CRESCENT VALLEY DR. NW
GIG HARBOR, WA 98332

PROJECT #	2022010.03
BID SET	
ISSUE DATE	JANUARY 8, 2024

REVISION SCHEDULE

AHJ APPROVAL STAMP

DEMOLITION FLOOR & ROOF PLANS

SHEET #
A20.01

NOTES & LEGEND - FLOOR PLAN

1. DIMENSIONS ARE TO ROUGH FRAMING, TYP UNO.
2. DIMENSIONS INDICATED AS "MIN" OR "CLR" ARE FROM NEAREST FINISH SURFACE, INCLUDING TRIM.
3. ROUGH DOOR OPENINGS ARE LOCATED 4" FROM NEAREST INTERSECTING WALL FRAMING, TYP UNO.

ROOF OVERHANG

OWNER FURNISHED, OWNER INSTALLED

5' DIAMETER TURNING SPACE

EXISTING TO REMAIN (OUT OF SCOPE FOR ARCHITECTURAL IMPROVEMENTS)

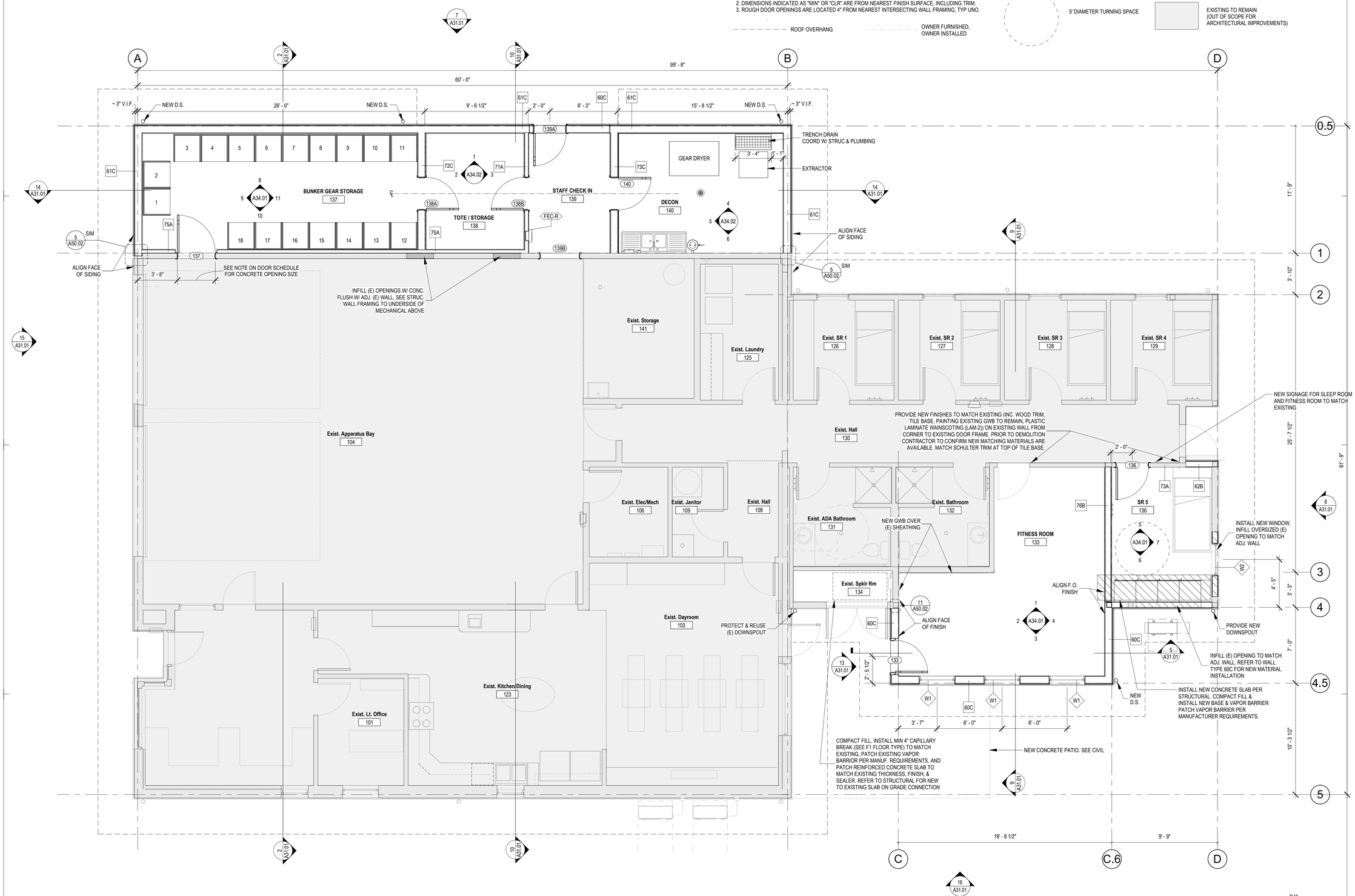

1 FLOOR PLAN - LEVEL 1

1/4" = 1'-0"

RICE fergus MILLER
ARCHITECTURE INTERIORS PLANNING VIZLAB
275 FIFTH STREET, SUITE 100
BREMERTON, WA 98337
360-377-8773
RFMARCH.COM

22020863 REGISTERED ARCHITECT GUNNAR R. GLADICS STATE OF WASHINGTON

STATION 57 ADDITION

GIG HARBOR FIRE AND MEDIC ONE

10521 CRESCENT VALLEY DR. NW
GIG HARBOR, WA 98332

PROJECT #	2022010.03
BID SET	
ISSUE DATE	JANUARY 8, 2024

REVISION SCHEDULE

AHJ APPROVAL STAMP

FLOOR PLAN

SHEET #

A22.01

NOTES & LEGEND - REFLECTED CEILING PLAN

1. ARCHITECTURAL RCP PROVIDED FOR COORDINATION PURPOSES ONLY. REFER TO MEP DRAWINGS FOR DETAILED SCOPE OF SYSTEMS.
2. CEILING FIXTURES ARE CENTERED IN CEILING TILE OR CENTERED IN ROOM, UNO.
3. DIMENSIONS IN CEILING PLANS ARE TO FACE OF FINISH, UNO.
4. GRAPHIC REPRESENTATION OF LIGHTING TYPES MAY BE NOT TO SCALE.

CEILING

- EXISTING TO REMAIN (GC TO COORDINATE REMOVAL, PROTECTION AND REINSTALLATION OF CEILING PANELS TO ENABLE ELEC. AND PLUMBING WORK IN THIS AREA)
- GWB OVERWOOD FRAMING, 2X8 DOUGLAS FIR-LARCH @24" OC
- ACT 2X4 SECOND LOOK

MEP

- RECESSED DOWNLIGHT
- RECESSED WALL WASHER
- PENDANT LINEAR
- SURFACE MOUNT LINEAR
- WALL SCONCE
- SEE MECHANICAL, SIZES MAY VARY

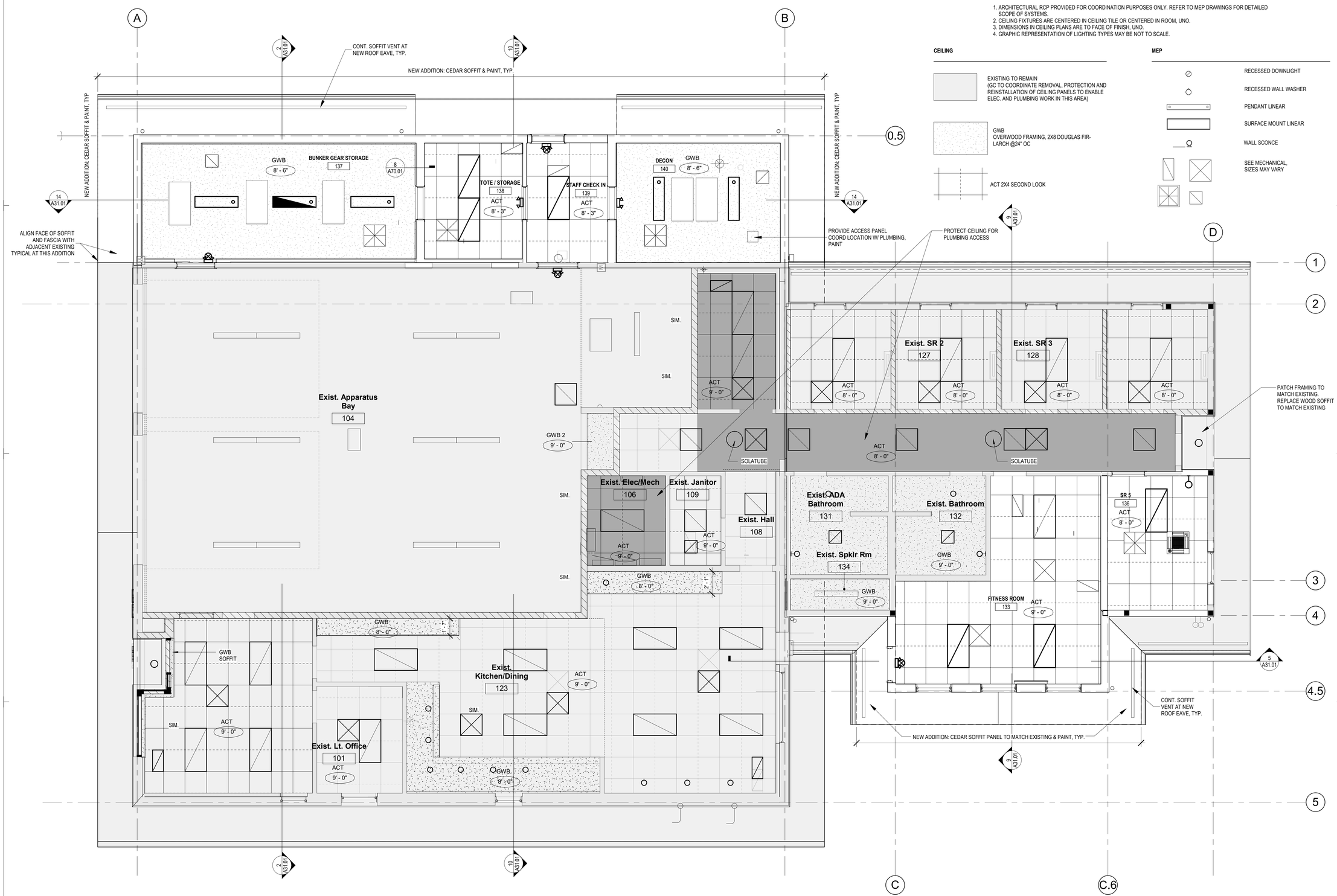

1 REFLECTED CEILING PLAN - LEVEL 1

1/4" = 1'-0"

RICE fergus MILLER
ARCHITECTURE INTERIORS PLANNING VIZLAB
275 FIFTH STREET, SUITE 100
BREMERTON, WA 98337
360-377-8773
RFMARCH.COM

22020863 REGISTERED ARCHITECT GUNNAR R. GLADICS STATE OF WASHINGTON

STATION 57 ADDITION
GIG HARBOR FIRE AND MEDIC ONE
10521 CRESCENT VALLEY DR. NW
GIG HARBOR, WA 98332

PROJECT #	2022010.03
BID SET	
ISSUE DATE	JANUARY 8, 2024

REVISION SCHEDULE

AHJ APPROVAL STAMP

REFLECTED CEILING PLAN

SHEET #
A24.01

ROOF VENTILATION CALCULATIONS

CONTINOUS LINEAR SOFFIT VENTS = 2" WIDE, PROVIDE 9 SQ. IN. OF NFVA PER LINEAR FOOT

178 SF / 9 = ~20 LINEAR FEET OF SOFFIT VENT REQUIRED

PER (OWENS CORNING) ROOF VENTILATION CALCULATOR

BASED ON 1:300 GUIDELINE 740 SF WILL REQUIRE:
178 SQ. IN. EXHAUST NFVA (AT RIDGE) = 15 LINEAL FEET "RIGID RIDGE VENT"

AND

178 SQ. IN. INTAKE NFVA (AT SOFFITS)

NOTES & LEGEND - ROOF PLAN

1. VERIFY EQUIPMENT CLEARANCES WITH MANUFACTURER REQUIREMENTS PRIOR TO INSTALL.
2. FIELD CONFIRM DIMENSIONS AND REPORT DISCREPANCIES, IF ANY, TO ARCHITECT PRIOR TO CONSTRUCTION.
3. DIMENSIONS ARE FROM GRIDLINE, CENTERLINE OF ELEMENTS, OR FACE OF STRUCTURAL FRAMING, UNO.
4. PROVIDE NEW FLASHING AT EXISTING MECHANICAL EQUIPMENT PER ROOF MANUFACTURER REQUIREMENTS.

3" / 12" — ROOF SLOPE PER PLAN

BUILDING OUTLINE BELOW

CHANGE IN ROOF ELEVATION

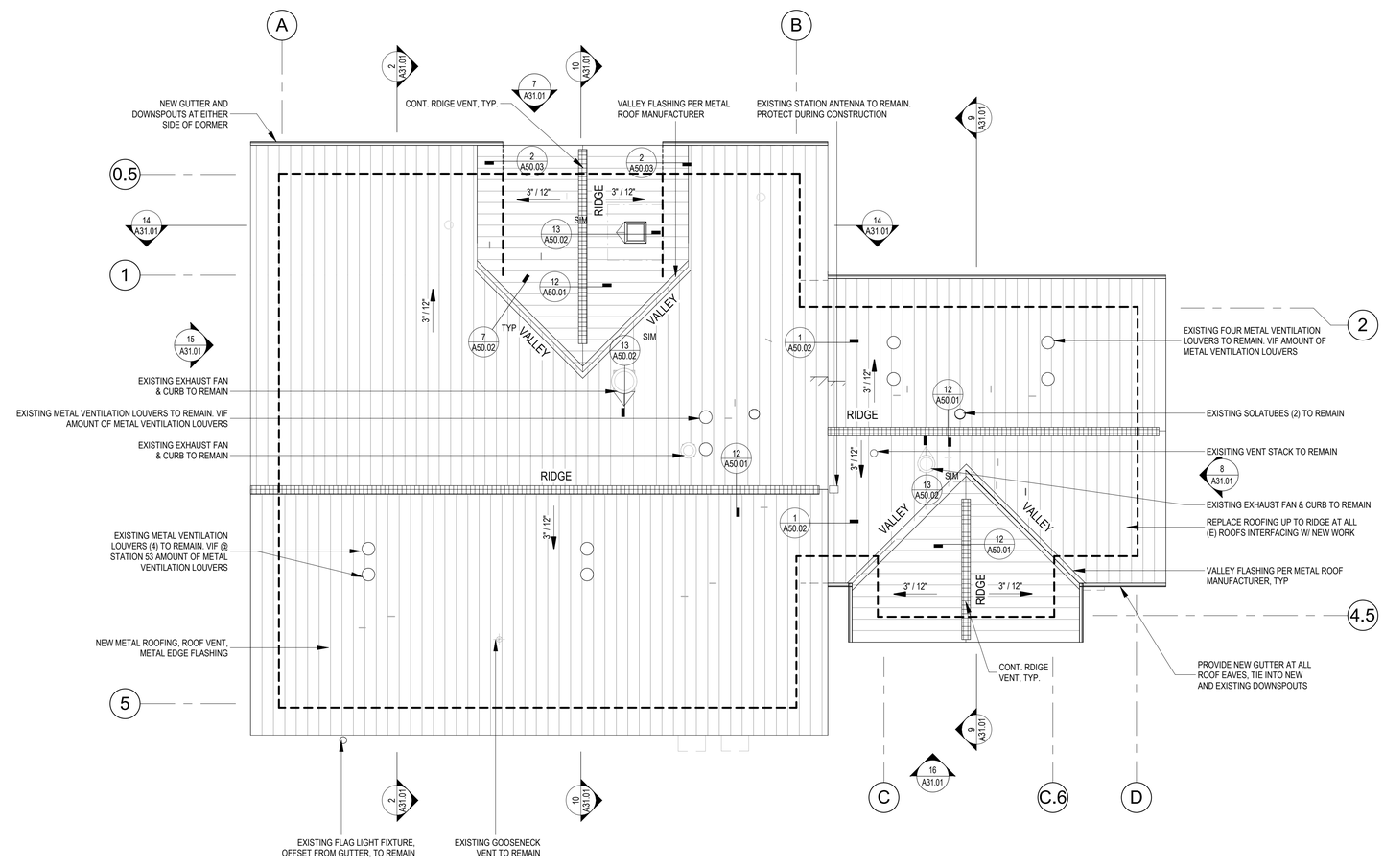

2 COMPOSITE ROOF PLAN

1/8" = 1'-0"

RICE fergus MILLER
ARCHITECTURE INTERIORS PLANNING VIZLAB
275 FIFTH STREET, SUITE 100
BREMERTON, WA 98337
360-377-8773
RFMARCH.COM

22020863
REGISTERED ARCHITECT
GUNNAR R. GLADICS
STATE OF WASHINGTON

STATION 57 ADDITION
GIG HARBOR FIRE AND MEDIC ONE
10521 CRESCENT VALLEY DR. NW
GIG HARBOR, WA 98332

PROJECT #	2022010.03
BID SET	
ISSUE DATE	JANUARY 8, 2024

REVISION SCHEDULE

AHJ APPROVAL STAMP

ROOF PLAN

SHEET #
A25.01

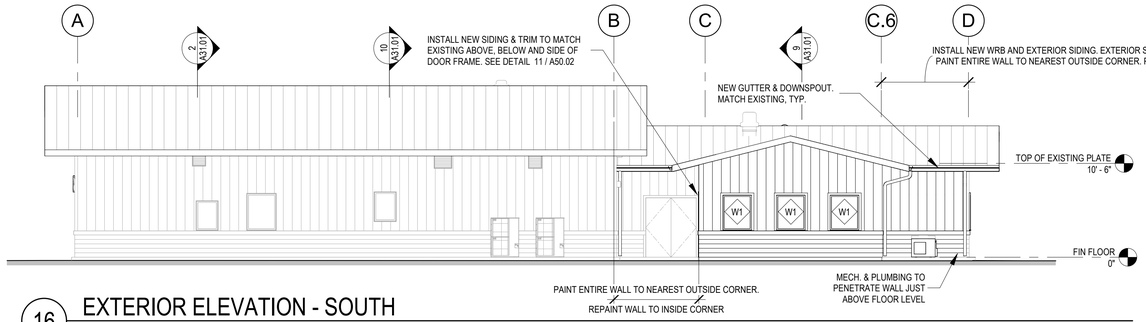

16 EXTERIOR ELEVATION - SOUTH
1/8" = 1'-0"

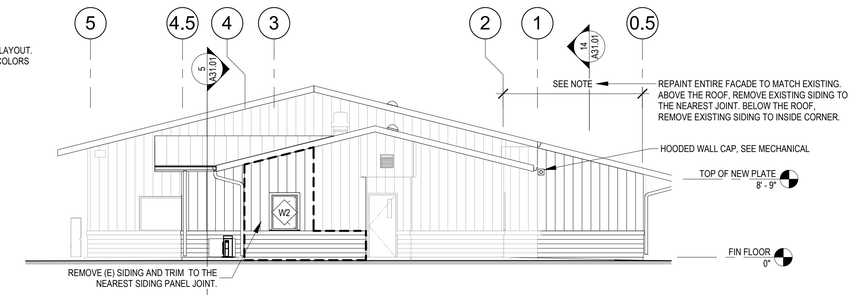

8 EXTERIOR ELEVATION - EAST
1/8" = 1'-0"

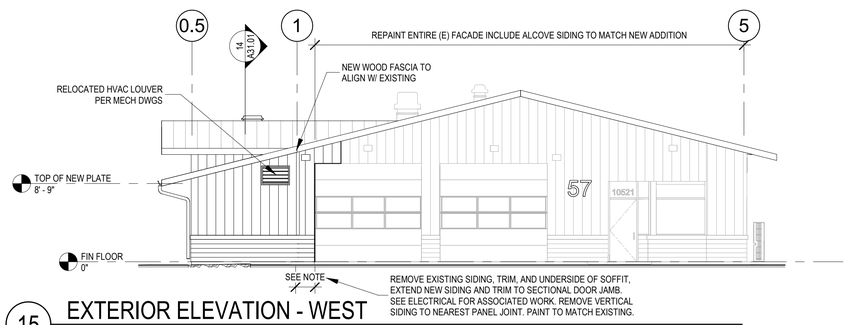

15 EXTERIOR ELEVATION - WEST
1/8" = 1'-0"

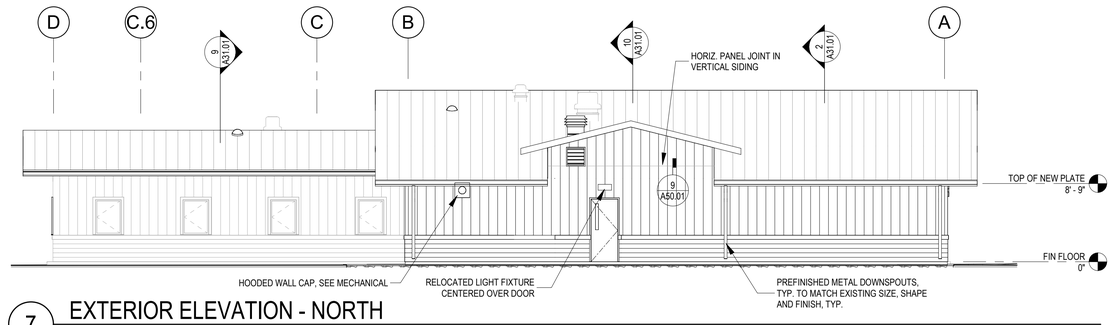

7 EXTERIOR ELEVATION - NORTH
1/8" = 1'-0"

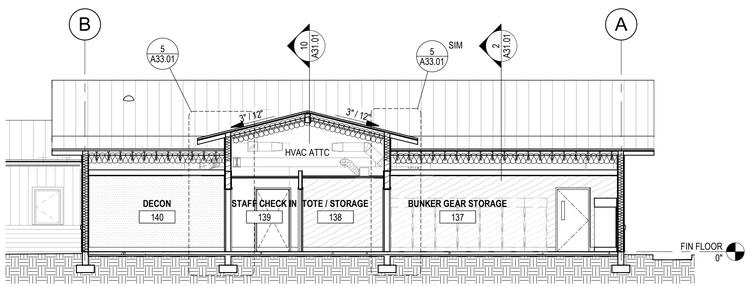

14 LONGITUDINAL BUILDING SECTION AT APP BAY ADDITION
1/8" = 1'-0"

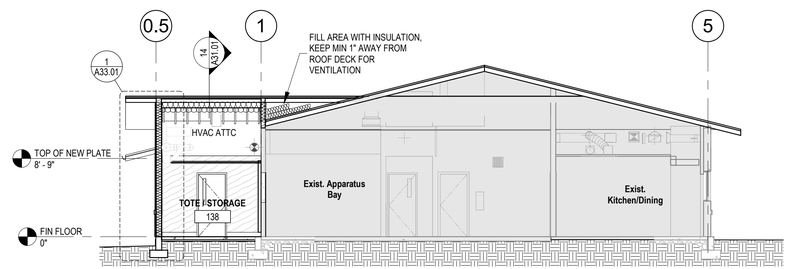

10 TRANSVERSE BUILDING SECTION @ APP BAY ADDITION DORMER
1/8" = 1'-0"

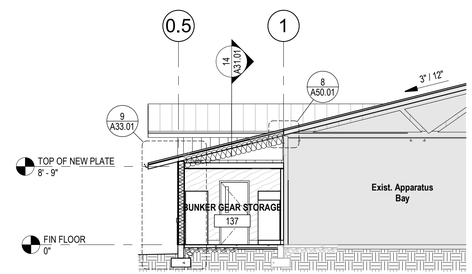

2 PARTIAL BLDG SECTION @ APP BAY
1/8" = 1'-0"

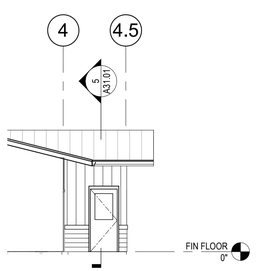

13 PARTIAL WEST ELEV.
1/8" = 1'-0"

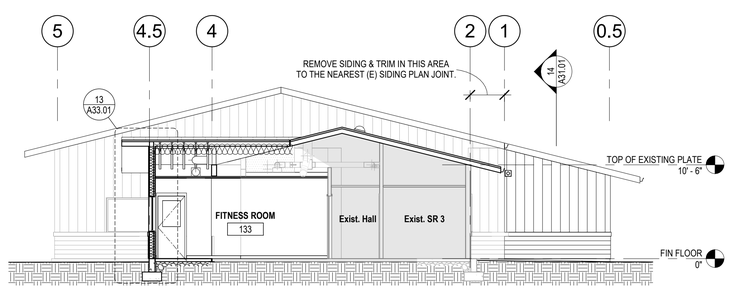

9 TRANSVERSE BUILDING SECTION @ FITNESS ADDITION
1/8" = 1'-0"

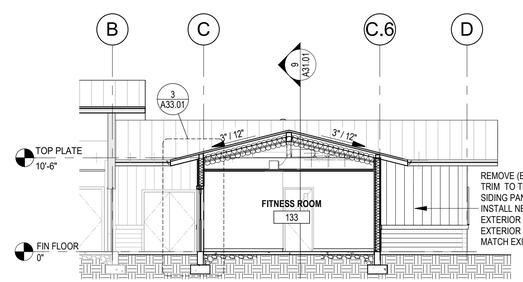

5 BUILDING SECTION @ FITNESS ADDITION
1/8" = 1'-0"

NOTES & LEGEND

1. SEE REFLECTED CEILING PLANS FOR EXTERIOR LIGHTING NOT SHOWN IN ELEVATIONS.
2. GRAPHIC REPRESENTATION OF EXTERIOR MATERIALS AND/OR LIGHTNG MAY BE NOT TO SCALE.
3. SEE A50.01 FOR TYP. EXTERIOR DETAILS.
4. PAINT ENTIRETY OF ANY (E) WALL AFFECTED BY NEW WORK.
5. PAINT ALL NEW WORK TO MATCH (E) COLOR SHCHEME.

HORIZONTAL LAP SIDING (TO MATCH ADJ. EXISTING)

VERTICAL SIDING W/ BATTENS (TO MATCH ADJ. EXISTING)

EXTERIOR LIGHTING, SIZES MAY VARY - SEE ELEC

LOUVER, SIZES MAY VARY - SEE MECH

RICE fergus MILLER
ARCHITECTURE INTERIORS PLANNING VIZLAB
275 FIFTH STREET, SUITE 100
BREMERTON, WA 98337
360-377-8773
RFMARCH.COM

22020863
REGISTERED ARCHITECT
GUNNAR R. GLADICS
STATE OF WASHINGTON

STATION 57 ADDITION
GIG HARBOR FIRE AND MEDIC ONE
10521 CRESCENT VALLEY DR. NW
GIG HARBOR, WA 98332

PROJECT #	2022010.03
BID SET	
ISSUE DATE	JANUARY 8, 2024

REVISION SCHEDULE

AHJ APPROVAL STAMP

EXTERIOR ELEVATIONS & BUILDING SECTIONS

SHEET #
A31.01

NOTES & LEGEND - SECTIONS

1. REFERENCE SHEET A03.01 FOR ASSEMBLY TYPES AND CONSTRUCTION.
2.

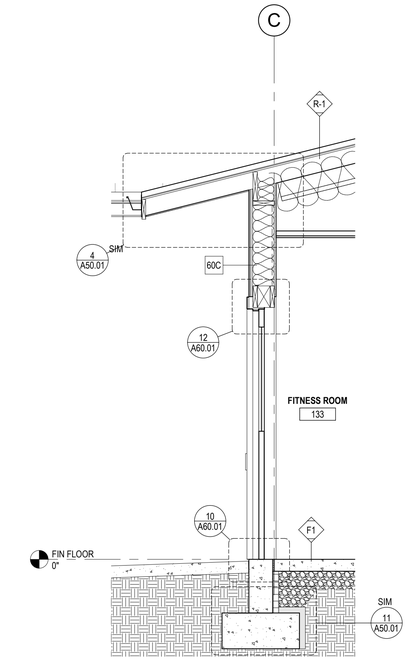

3 WALL SECTION @ FITNESS EAVE
1/2" = 1'-0"

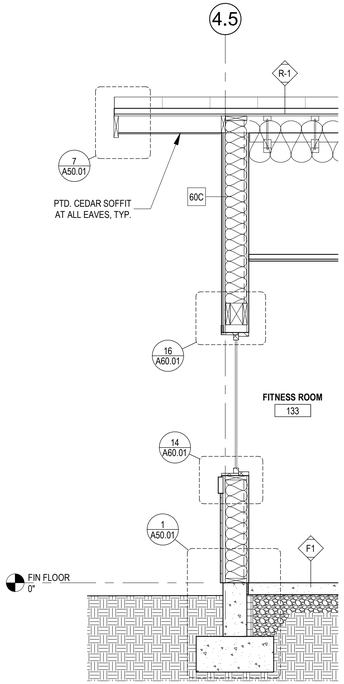

13 WALL SECTION @ FITNESS GABLE
1/2" = 1'-0"

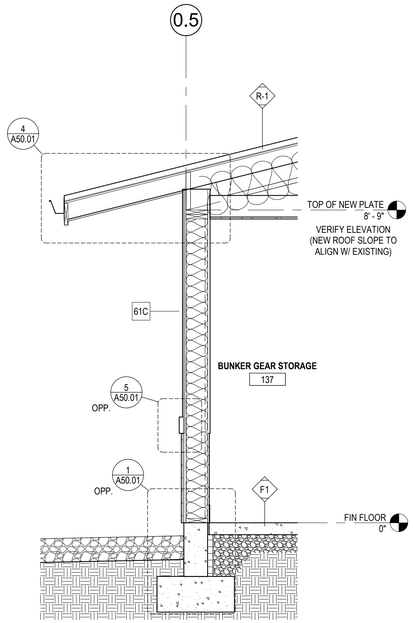

9 WALL SECTION @ APP BAY ADDITION
1/2" = 1'-0"

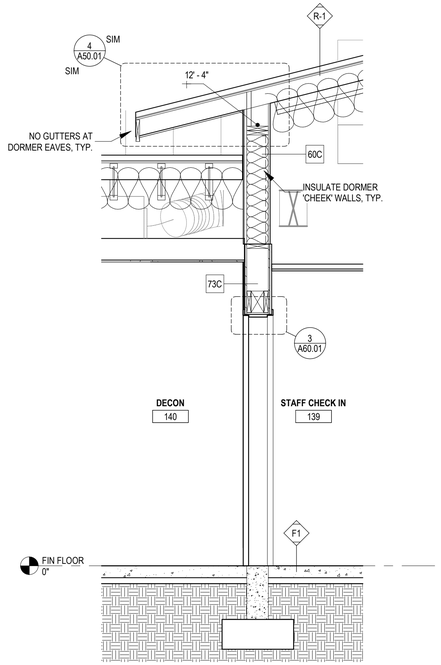

5 WALL SECTION @ DORMER EAVE
1/2" = 1'-0"

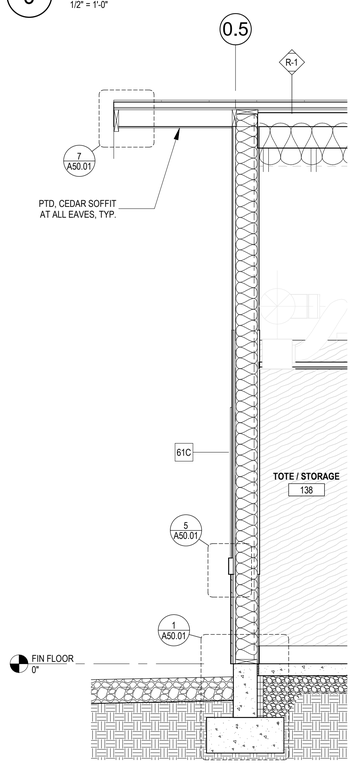

1 WALL SECTION @ DORMER GABLE
1/2" = 1'-0"

RICE fergus MILLER
ARCHITECTURE INTERIORS PLANNING VIZLAB
275 FIFTH STREET, SUITE 100
BREMERTON, WA 98337
360-377-8773
RFMARCH.COM

22020863
REGISTERED ARCHITECT
GUNNAR R. GLADICS
STATE OF WASHINGTON

STATION 57 ADDITION
GIG HARBOR FIRE AND MEDIC ONE
10521 CRESCENT VALLEY DR. NW
GIG HARBOR, WA 98332

PROJECT #	2022010.03
BID SET	
ISSUE DATE	JANUARY 8, 2024

REVISION SCHEDULE

AHJ APPROVAL STAMP

WALL SECTIONS

SHEET #
A33.01

NOTES & LEGEND - INTERIOR ELEVATIONS

1. REFERENCE FINISH PLAN OR FINISH SCHEDULE FOR TYPICAL ROOM FINISHES NOT SHOWN.
2. REFERENCE TYPICAL MOUNTING HEIGHTS UNLESS MOUNTING HEIGHT IS NOTED OTHERWISE.
3. GRAPHIC REPRESENTATION OF MATERIALS AND/OR FIXTURES MAY NOT BE TO SCALE.
4. GC TO PROVIDE AND COORDINATE MOUNTING BLOCKING BEHIND WALL FINISHES AT ALL LOCATIONS INDICATED FOR TV OR ALERT MONITORS BY OWNER.

TYPICAL MOUNTING HEIGHTS

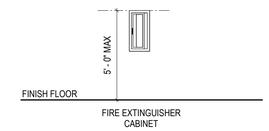

MOUNTING HEIGHTS & OPERABLE PARTS

NOTES:
THE FOLLOWING SHALL BE MOUNTED WITHIN AN ACCESSIBLE REACH RANGE PER ICC A117.1, 308:

ACCESSIBLE SPACES WITHIN 'TYPE A' DWELLING UNITS:
1. LIGHTING CONTROLS
2. ELECTRICAL PANELBOARDS, SWITCHES AND ELECTRICAL OUTLET
3. ENVIRONMENTAL CONTROLS
4. OPERABLE WINDOW HARDWARE
5. USER CONTROLS FOR SECRITY OR INTERCOM SYSTEMS

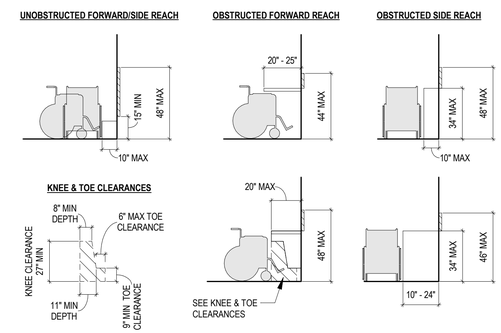

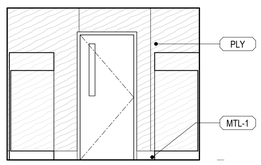

11 BUNKER GEAR -EAST
1/4" = 1'-0"

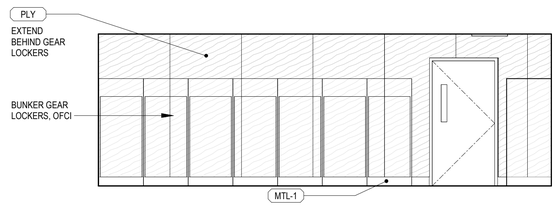

10 BUNKER GEAR - SOUTH
1/4" = 1'-0"

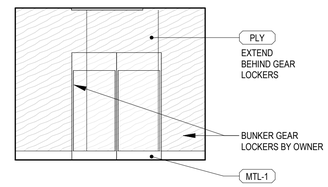

9 BUNKER GEAR - WEST
1/4" = 1'-0"

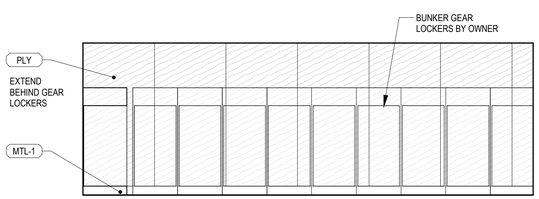

8 BUNKER GEAR - NORTH
1/4" = 1'-0"

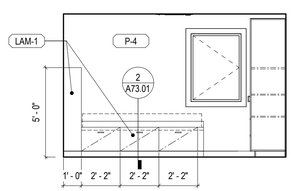

7 SLR 5 - EAST
1/4" = 1'-0"

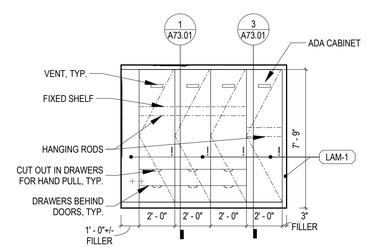

6 SLR 5 - SOUTH
1/4" = 1'-0"

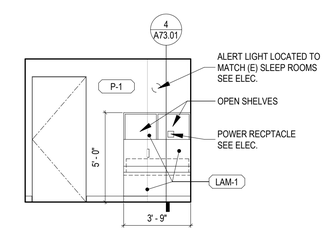

5 SLR 5 - NORTH
1/4" = 1'-0"

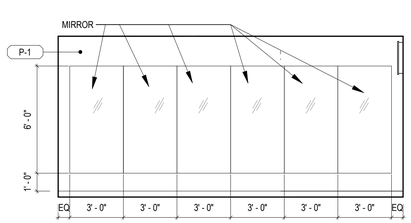

4 FITNESS - EAST
1/4" = 1'-0"

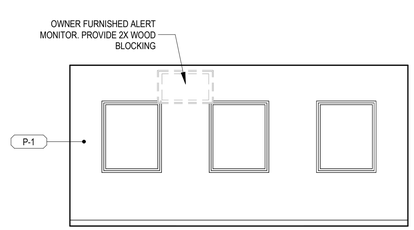

3 FITNESS - SOUTH
1/4" = 1'-0"

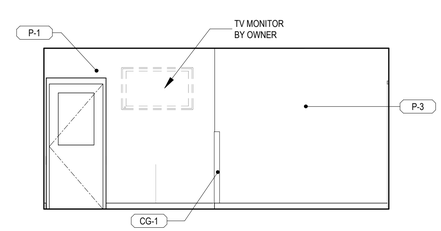

2 FITNESS - WEST
1/4" = 1'-0"

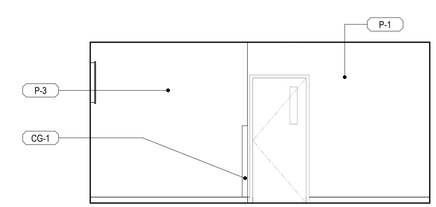

1 FITNESS - NORTH
1/4" = 1'-0"

RICE fergus MILLER
ARCHITECTURE INTERIORS PLANNING VIZLAB
275 FIFTH STREET, SUITE 100
BREMERTON, WA 98337
360-377-8773
RFMARCH.COM

22020863
REGISTERED ARCHITECT
GUNNAR R. GLADICS
STATE OF WASHINGTON

STATION 57 ADDITION
GIG HARBOR FIRE AND MEDIC ONE
10521 CRESCENT VALLEY DR. NW
GIG HARBOR, WA 98332

PROJECT #	2022010.03
BID SET	
ISSUE DATE	JANUARY 8, 2024

REVISION SCHEDULE

AHJ APPROVAL STAMP

INTERIOR ELEVATIONS, NOTES AND MOUNTING HEIGHTS

SHEET #
A34.01

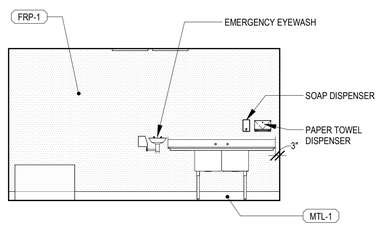

6 DECON - SOUTH
1/4" = 1'-0"

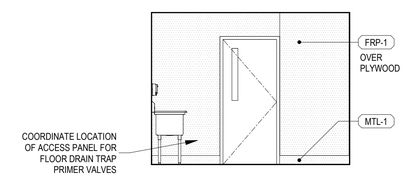

5 DECON - WEST
1/4" = 1'-0"

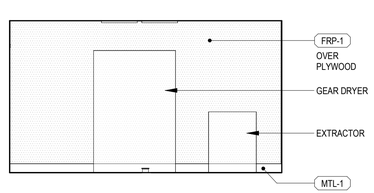

4 DECON - NORTH
1/4" = 1'-0"

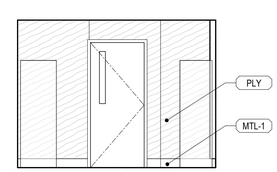

3 TOTE STORE - EAST
1/4" = 1'-0"

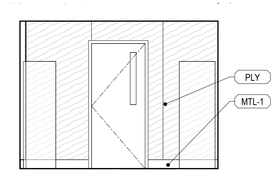

2 TOTE STORE - WEST
1/4" = 1'-0"

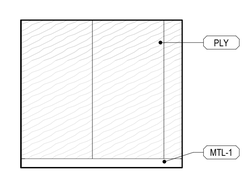

1 TOTE STORE - NORTH
1/4" = 1'-0"

RICE fergus MILLER
ARCHITECTURE INTERIORS PLANNING VIZLAB
275 FIFTH STREET, SUITE 100
BREMERTON, WA 98337
360-377-8773
RFMARCH.COM

22020863
REGISTERED ARCHITECT
GUNNAR R. GLADICS
STATE OF WASHINGTON

STATION 57 ADDITION
GIG HARBOR FIRE AND MEDIC ONE
10521 CRESCENT VALLEY DR. NW
GIG HARBOR, WA 98332

PROJECT #	2022010.03
BID SET	
ISSUE DATE	JANUARY 8, 2024

REVISION SCHEDULE

AHJ APPROVAL STAMP

INTERIOR ELEVATIONS

SHEET #
A34.02

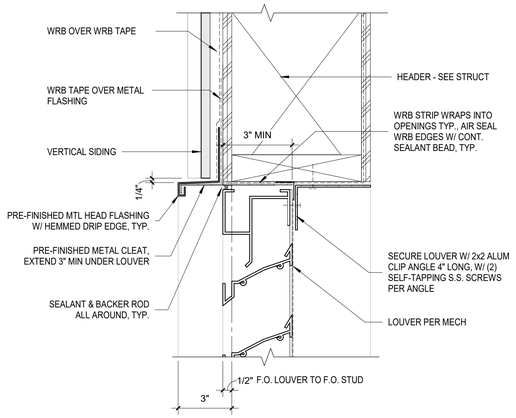

15 SECTION DETAIL AT LOUVER HEAD
3" = 1'-0"

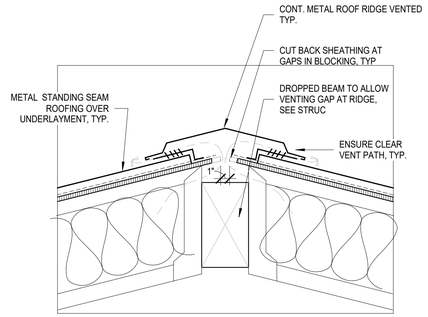

12 SECTION DETAIL AT RIDGE
1 1/2" = 1'-0"

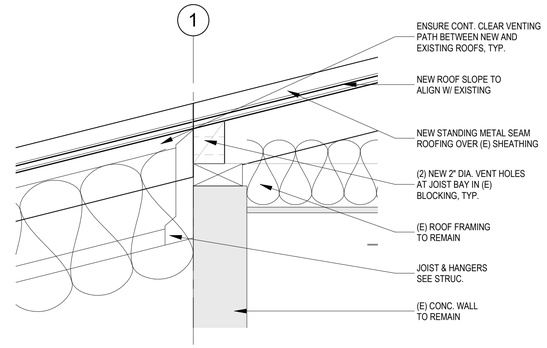

8 SECTION DETAIL @ (E) ROOF INTERFACE
1 1/2" = 1'-0"

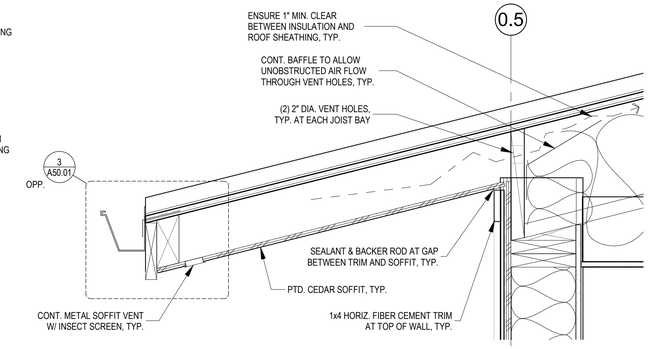

4 SECTION DETAIL AT TYPICAL EAVE
1 1/2" = 1'-0"

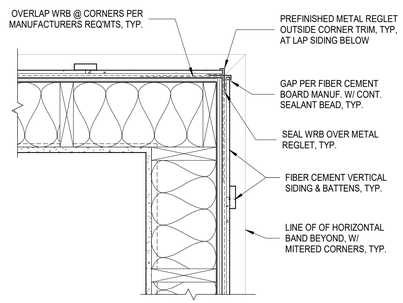

11 PLAN DETAIL @ OUTSIDE CORNER TRIM
1 1/2" = 1'-0"

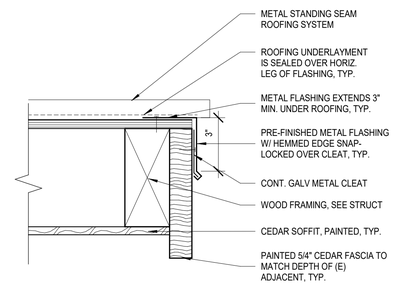

7 SECTION DETAIL AT RAKE FASCIA
3" = 1'-0"

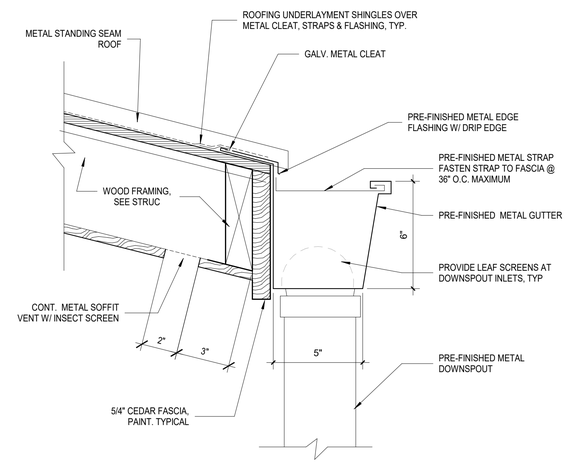

3 SECTION DETAIL AT EAVE FASCIA W/ GUTTER
3" = 1'-0"

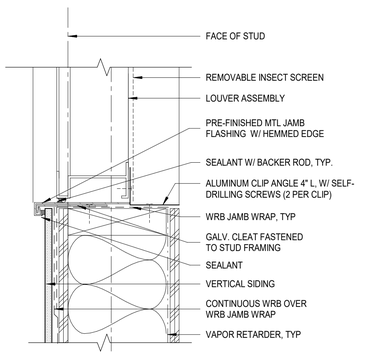

14 PLAN DETAIL AT LOUVER JAMB
3" = 1'-0"

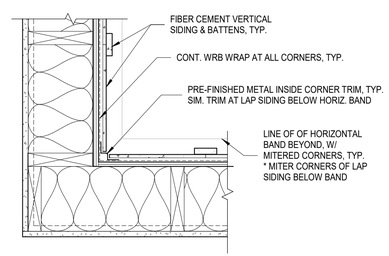

10 PLAN DETAIL @ INSIDE CORNER
1 1/2" = 1'-0"

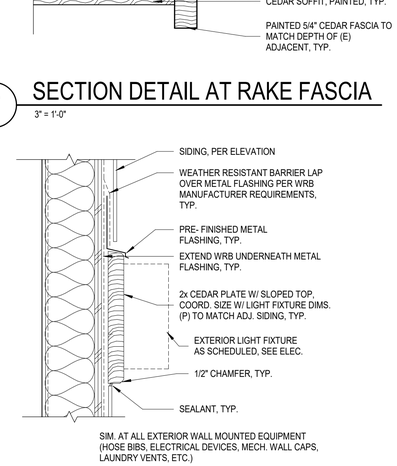

6 SECTION AT EXT. MOUNTING PLATE
1 1/2" = 1'-0"

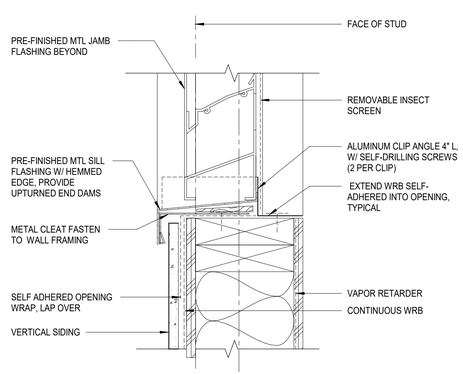

13 SECTION DETAIL AT LOUVER SILL
3" = 1'-0"

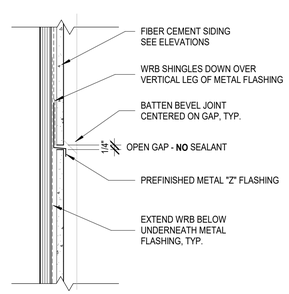

9 SECTION @ HORIZ. PANEL JOINT
3" = 1'-0"

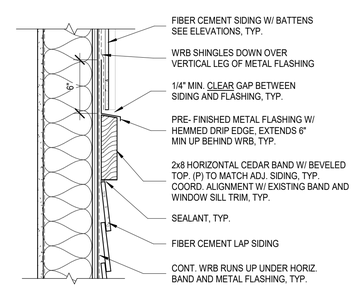

5 SECTION @ HORIZ. TRIM BOARD
1 1/2" = 1'-0"

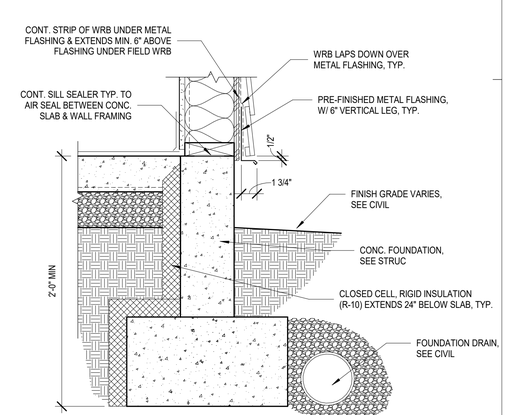

1 SECTION DETAIL AT TYP. FOOTING
1 1/2" = 1'-0"

RICE fergus MILLER
ARCHITECTURE INTERIORS PLANNING VIZLAB
275 FIFTH STREET, SUITE 100
BREMERTON, WA 98337
360-377-8773
RFMARCH.COM

22020863
REGISTERED ARCHITECT
GUNNAR R. GLADICS
STATE OF WASHINGTON

STATION 57 ADDITION
GIG HARBOR FIRE AND MEDIC ONE
10521 CRESCENT VALLEY DR. NW
GIG HARBOR, WA 98332

PROJECT #	2022010.03
BID SET	
ISSUE DATE	JANUARY 8, 2024

REVISION SCHEDULE

AHJ APPROVAL STAMP

EXTERIOR DETAILS

SHEET #
A50.01

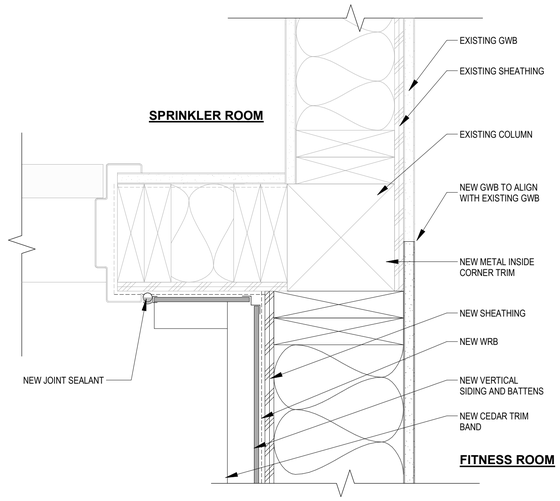

11 PLAN DETAIL @ EXT. WALL AT FITNESS
3" = 1'-0"

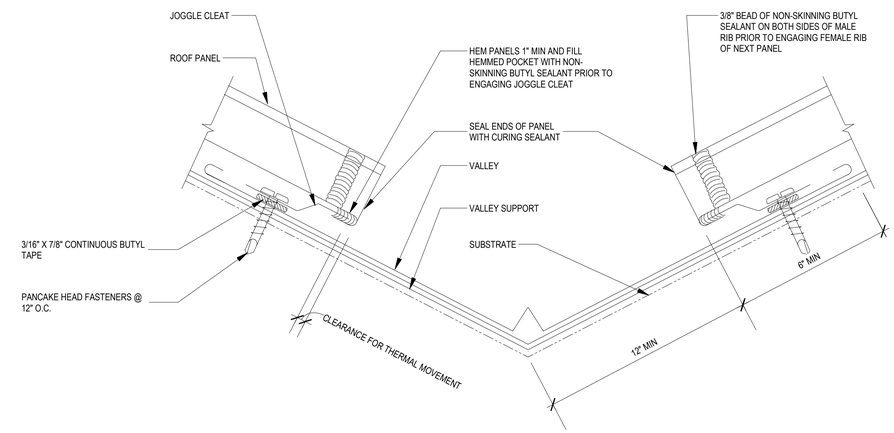

7 SECTION DETAIL @ VALLEY FLASHING AT ROOF
3" = 1'-0"

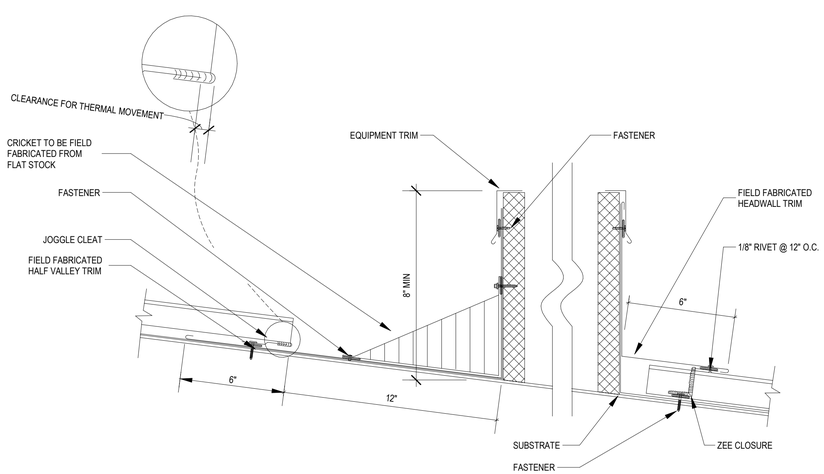

13 SECTION DETAIL @ CURB / ROOF CRICKET
3" = 1'-0"

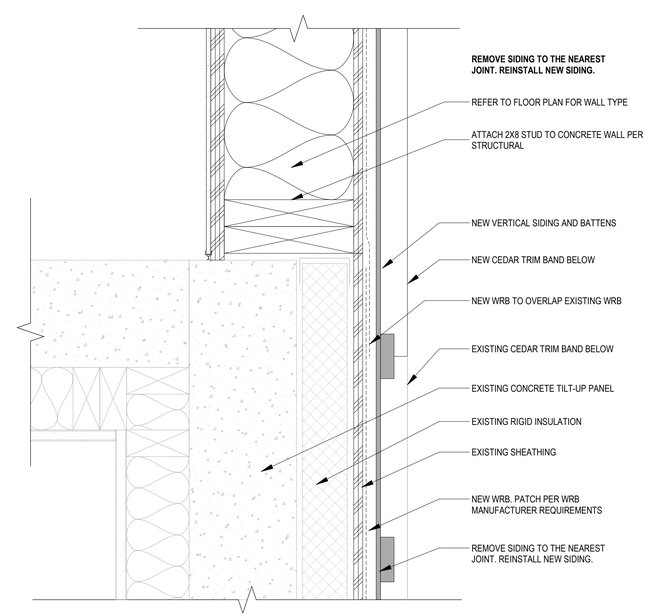

5 PLAN DETAIL @ NEW AND EXISTING EXT. WALL
3" = 1'-0"

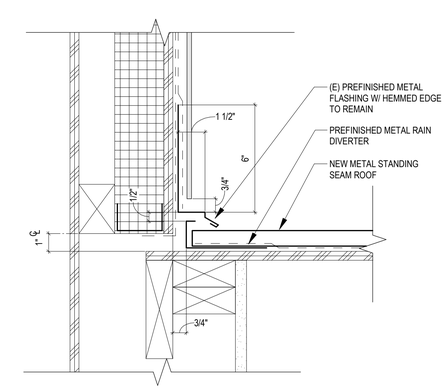

1 SECTION DETAIL OF ROOF TO WALL
3" = 1'-0"

RICE fergus MILLER
ARCHITECTURE INTERIORS PLANNING VIZLAB
275 FIFTH STREET, SUITE 100
BREMERTON, WA 98337
360-377-8773
RFMARCH.COM

22020863
REGISTERED ARCHITECT
GUNNAR R. GLADICS
STATE OF WASHINGTON

STATION 57 ADDITION
GIG HARBOR FIRE AND MEDIC ONE
10521 CRESCENT VALLEY DR. NW
GIG HARBOR, WA 98332

PROJECT #	2022010.03
BID SET	
ISSUE DATE	JANUARY 8, 2024

REVISION SCHEDULE

AHJ APPROVAL STAMP

EXTERIOR DETAILS

SHEET #
A50.02

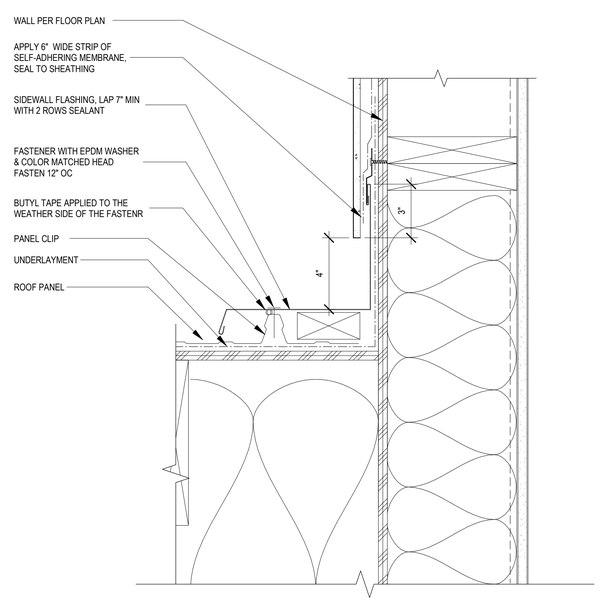

2 SECTION DETAIL @ ROOF TO WALL

3" = 1'-0"

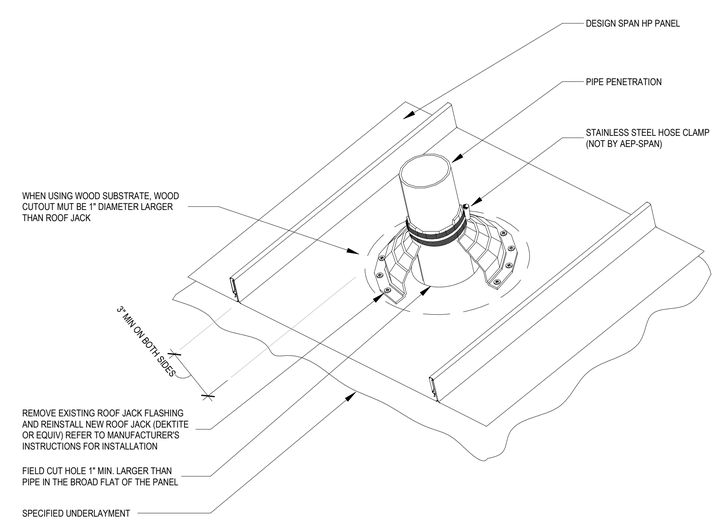

NOTES:

1. PENETRATIONS SHOULD BE CENTERED IN PANELS IF AT ALL POSSIBLE
2. SUBSTRATE MUST BE CUT OUT ENOUGH SO THAT ROOF JACK IS ONLY ATTACHED TO ROOF PANEL

1 ISO DETAIL @ ROOF PENETRATION FLASHING

3" = 1'-0"

RICE fergus MILLER
ARCHITECTURE INTERIORS PLANNING VIZLAB
275 FIFTH STREET, SUITE 100
BREMERTON, WA 98337
360-377-8773
RFMARCH.COM

22020863
REGISTERED ARCHITECT
GUNNAR R. GLADICS
STATE OF WASHINGTON

STATION 57 ADDITION

GIG HARBOR FIRE AND MEDIC ONE

10521 CRESCENT VALLEY DR. NW
GIG HARBOR, WA 98332

PROJECT #	2022010.03
BID SET	
ISSUE DATE	JANUARY 8, 2024

REVISION SCHEDULE

AHJ APPROVAL STAMP

EXTERIOR DETAILS

SHEET #

A50.03

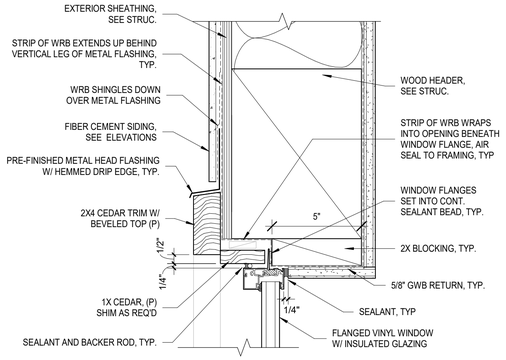

16 SECTION DETAIL @ WINDOW HEAD

3" = 1'-0"

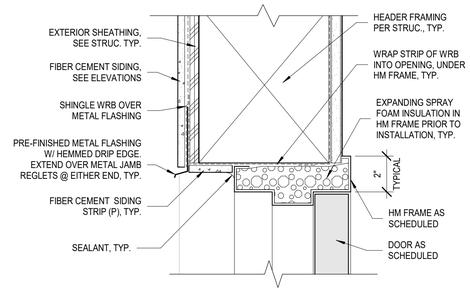

12 SECTION DETAIL @ EXT DOOR HEAD

3" = 1'-0"

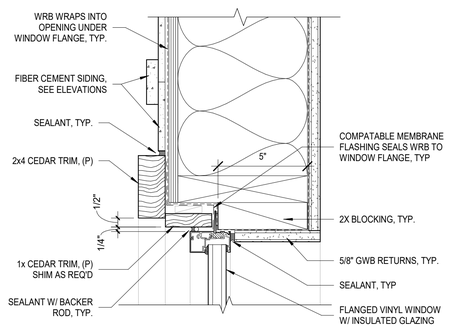

15 PLAN DETAIL @ WINDOW JAMB

3" = 1'-0"

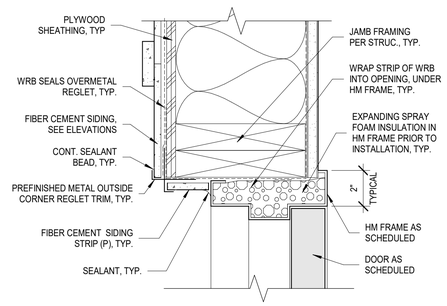

11 PLAN DETAIL @ EXT DOOR JAMB

3" = 1'-0"

DOOR & FRAME TYPES

1/4" = 1'-0"

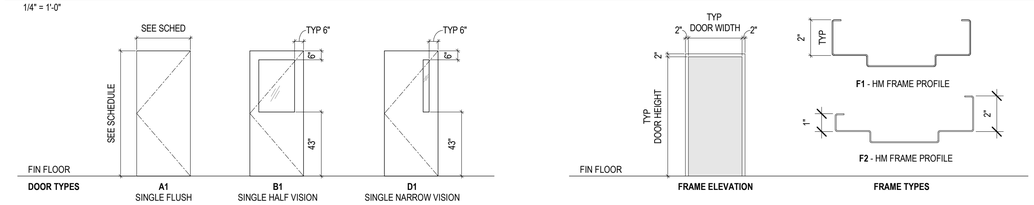

DOOR SCHEDULE

DOOR #	ROOM NAME	DOOR INFORMATION TYPE	MATERIAL	FINISH	GLAZING	HEIGHT	WIDTH	THICKNESS	FRAME INFORMATION FRAME TYPE	MATERIAL	FINISH	FIRE RATING	HARDWARE GROUP	COMMENTS
133	FITNESS ROOM	B1	HM	P-2	CLEAR, TEMPERED	7' - 0"	3' - 0"	1 3/4"	F2	HM	P-2		01	HVAC INTERLOCK SWITCH BY MECH, MIN U-0.60
136	SR 5	A1	WD	09 Stain - Wood	N/A	7' - 0"	3' - 0"	1 3/4"	F2	HM	P-2	20 MIN	02	MATCH (E) DOOR STAIN DOOR VENEER & STAIN
137	BUNKER GEAR STORAGE	D1	HM	P-2	CLEAR, TEMPERED	7' - 0"	3' - 6"	1 3/4"	F1	HM	P-2		04	COORDINATE SIZE OF CONCRETE CLEAR OPENING REQUIRED FOR DOOR SIZE
138A	TOTE / STORAGE	D1	HM	P-2	CLEAR, TEMPERED	7' - 0"	3' - 0"	1 3/4"	F1	HM	P-2		05	
138B	TOTE / STORAGE	D1	HM	P-2	CLEAR, TEMPERED	7' - 0"	3' - 0"	1 3/4"	F1	HM	P-2		05	
139A	STAFF CHECK IN	D1	HM	P-2	CLEAR, TEMPERED	7' - 0"	3' - 0"	1 3/4"	F2	HM	P-2		03	MIN. U-0.60
139B	STAFF CHECK IN	N/A	N/A	N/A	N/A	7' - 0"	3' - 8"	1 3/4"	F1	HM	P-2	--		VIF DIMENSIONS
140	DECON	D1	HM	P-2	CLEAR, TEMPERED	7' - 0"	3' - 0"	1 3/4"	F1	HM	P-2		05	

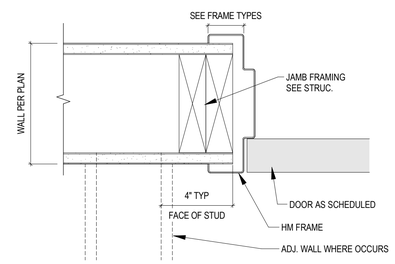

7 PLAN DETAIL @ INT. HM DOOR JAMB

3" = 1'-0"

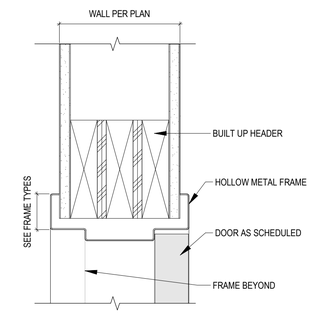

3 SECTION DETAIL @ INT. HM DOOR HEAD

3" = 1'-0"

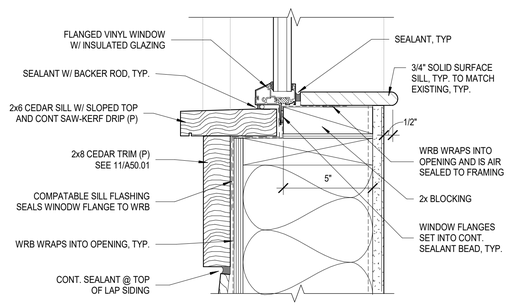

14 SECTION DETAIL @ WINDOW SILL

3" = 1'-0"

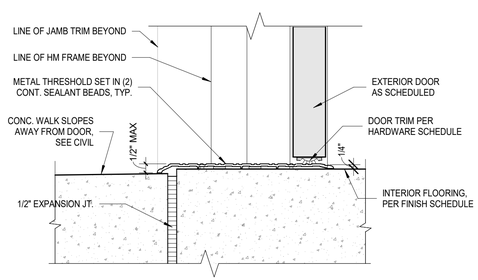

10 SECTION DETAIL AT EXT DOOR THRESHOLD

3" = 1'-0"

WINDOW SCHEDULE

WINDOW #	WIDTH	HEIGHT	COMMENTS
W1	3' - 4"	4' - 0"	(MIN. U-0.38)
W2	3' - 0"	4' - 0"	OPERABLE, CASEMENT (MIN. U-0.45)
W14			

- **PRESCRIPTIVE REQUIRMENTS OF FOR BUILDING ENVELOPE COMPONENTS PER 2018 WASHINGTON STATE ENERGY CODE (WSEC) COMMERCIAL**

- ENTRANCE DOORS U-FACTOR: **0.60**
- FIXED WINDOWS U-FACTOR: **0.38**
- OPERABLE WINDOWS U-FACTOR: **0.45**
- GLAZED FENESTRATION SHGC: per table C402.4

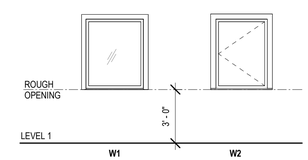

WINDOW TYPES

1/4" = 1'-0"

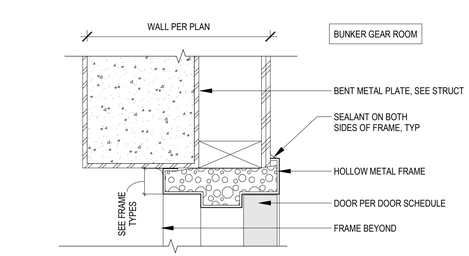

13 SECTION DETAIL @ DOOR 137 HEAD

3" = 1'-0"

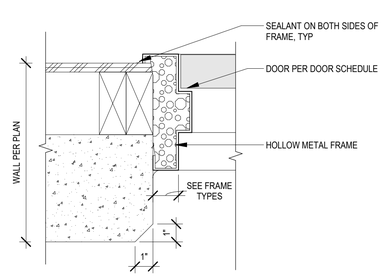

09 SECTION DETAIL @ DOOR 137 JAMB

3" = 1'-0"

INTERIOR FINISH SCHEDULE

TAG	MATERIAL	NOTES
CG-1	CORNER GUARD	4'H INSTALL ABOVE WALL BASE
CONC	SEALED CONCRETE	-
CPT-1	CARPET	-
FRP-1	FIBERGLASS REINFORCED PANEL	-
LAM-1	HIGH PRESSURE LAMINATE	-
MTL-1	STAINLESS STEEL WALL BASE	6" HIGH
P-1	INTERIOR PAINT - FIELD	-
P-2	INTERIOR PAINT - DOORS/FRAMES	-
P-3	INTERIOR PAINT - FITNESS ACCENT	-
P-4	INTERIOR PAINT - SLEEP ROOM ACCENT	-
P-11	EXTERIOR PAINT	-
PLY	PLYWOOD WALL PANEL	CLEAR SEALER
RES-1	VINYL SHEET FLOORING	-
RES-2	RUBBER BASE	-

ROOM FINISH SCHEDULE

ROOM INFORMATION NUMBER	NAME	TYP FINISH INFORMATION, UNO WALL	BASE	FLOOR	CEILING	NOTES
133	FITNESS ROOM	P-1/P-3	RES-2	RES-1	ACT	
136	SR 5	P-1 / P-4	RES-2	CPT-1	ACT	
137	BUNKER GEAR STORAGE	PLY	MTL-1	CONC	P-1	SEAL FLOOR
138	TOTE / STORAGE	PLY	MTL-1	CONC	ACT	SEAL FLOOR
139	STAFF CHECK IN	P-1	RES-2	CONC	ACT	SEAL FLOOR
140	DECON	FRP	MTL-1	CONC	P-1	SEAL FLOOR

RICE fergus MILLER
ARCHITECTURE INTERIORS PLANNING VIZLAB
275 FIFTH STREET, SUITE 100
BREMERTON, WA 98337
360-377-8773
RFMARCH.COM

22020863
REGISTERED ARCHITECT
GUNNAR R. GLADICS
STATE OF WASHINGTON

STATION 57 ADDITION
GIG HARBOR FIRE AND MEDIC ONE
10521 CRESCENT VALLEY DR. NW
GIG HARBOR, WA 98332

PROJECT #	2022010.03
BID SET	
ISSUE DATE	JANUARY 8, 2024

REVISION SCHEDULE

AHJ APPROVAL STAMP

DOOR SCHEDULE, FRAME TYPES, DETAILS, INTERIOR FINISH SCHEDULES, WINDOW SCHEDULE & DETAILS

SHEET #

A60.01

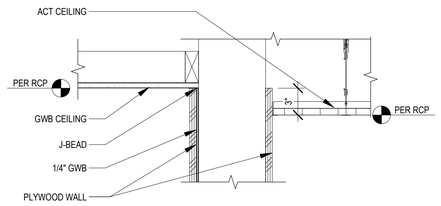

8 GWB CEILING AT PLYWOOD WALL

1 1/2" = 1'-0"

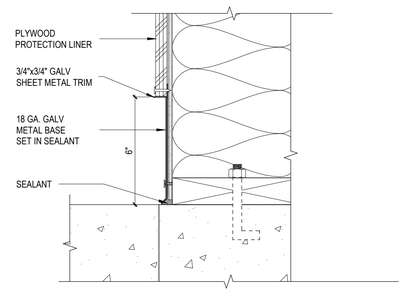

7 PLYWOOD/METAL BASE

3" = 1'-0"

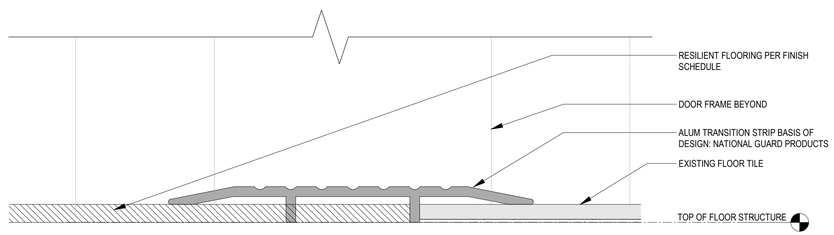

6 RESILIENT TO TILE

12" = 1'-0"

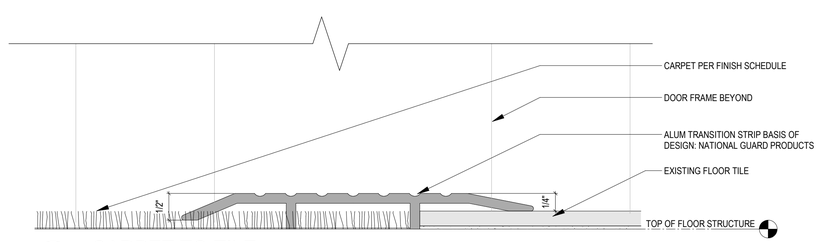

5 CARPET TO TILE

12" = 1'-0"

PERIMETER SUPPORT ANGLE:
- THE PERIMETER SUPPORT ANGLE SHALL SUPPLY A SUPPORT LEDGE OF NOT LESS THAN 2" OR MANUFACTURER ASSEMBLY APPROVED FOR USE IN SEISMIC ZONES D, E OR F
- MAIN RUNNER OR CROSS RUNNER ENDS, OR BOTH, SHALL BE ATTACHED TO THE PERIMETER ON TWO ADJACENT WALLS. A CLEARANCE OF 3/4" SHALL BE MAINTAINED BETWEEN THE MAIN RUNNER AND CROSS RUNNER ENDS AND THE PERIMETER MEMBERS ON THE TWO OPPOSITE WALLS. ON THE WALLS WHERE THE TERMINAL END RUNNERS ARE NOT FIXED TO THE PERIMETER SUPPORTING CLOSURE, ALLOW FOR 3/4" AXIAL MOVEMENT

SUSPENSION WIRE:
- MIN 12 GA STEEL WIRE
- 8" MAX FROM WALL ON ALL TERMINAL ENDS OF RUNNERS
- 4'-0" OC ALONG EACH MAIN RUNNER

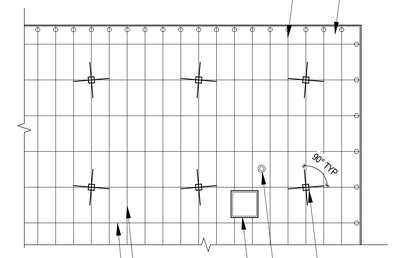

MAIN RUNNER,
SPACING VARIES, TYP

PLAN DIAGRAM

CROSS RUNNER,
SPACING VARIES, TYP

ALL CEILING PENETRATIONS (COLUMNS ETC.) AND INDEPENDENTLY SUPPORTED FIXTURES OR SERVICES SHALL BE CONSIDERED AS PERIMETER CLOSURES THAT ALSO MUST ALLOW THE REQUIRED CLEARANCES BY USING SUITABLE CLOSURE DETAIL

SPRINKLER HEADS AND OTHER PENETRATIONS SHALL HAVE A 2" OVERSIZE RING, SLEEVE OR ADAPTER THROUGH THE CEILING TILE TO ALLOW FOR FREE MOVEMENT OF AT LEAST 1" IN ALL HORIZONTAL DIRECTIONS.

HORIZONTAL RESTRAINT POINT (SEE DIAGRAM BELOW):
- COMPRESSION POST AND BRACING WIRES
- 12'-0" OC IN BOTH DIRECTIONS WITH THE FIRST POINT WITHIN 6'-0" FROM EACH WALL

BRACING WIRES:
- (4) 12 GA WIRES ATTACHED TO THE MAIN BEAM. WIRES ARE ARRAYED 90° FROM EA OTHER & AT AN ANGLE NOT EXCEEDING 45° FROM THE PLANE OF CEILING.
- WIRES ARE TO BE WITHIN 2" OF THE CONNECTION OF THE VERTICAL STRUT TO SUSPENDED CEILING.

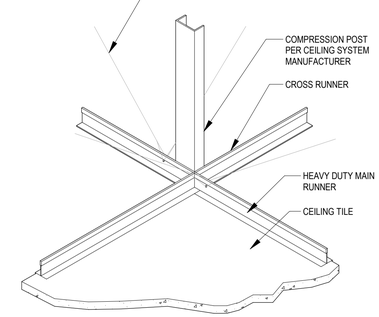

LATERAL FORCE BRACING DIAGRAM

NOTES:
1. SUSPENDED CEILING SYSTEM INSTALLATION SHALL BE INSTALLED PER IBC 2018 SECTIONS 803.13 AND 808, ASCE 7-10, AND ASTM E580
2. THIS DETAIL APPLIES TO SEISMIC DESIGN CATEGORIES D, E, AND F.
3. SPREADER (SPACER) BARS OR OTHER MEANS APPROVED BY THE LOCAL BUILDING DEPT. SHALL BE USED TO PREVENT ENDS OF MAIN BEAMS AT PERIMETER WALLS FROM SPREADING OPEN DURING A SEISMIC EVENT. PERIMETER WIRES SHALL NOT BE USED IN LIEU OF SPREADER BARS.
4. FOR CEILING AREAS EXCEEDING 2,500 SF, A SEISMIC SEPARATION JOINT OR FULL HEIGHT PARTITION THAT BREAKS THE CEILING UP INTO AREAS NOT EXCEEDING 2,500 SF, EACH WITH A RATIO OF THE LONG TO SHORT DIMENSION LESS THAN OR EQUAL TO 4, SHALL BE PROVIDED UNLESS STRUCTURAL ANALYSES ARE PERFORMED OF THE CEILING BRACING SYSTEM FOR THE PRESCRIBED SEISMIC FORCES THAT DEMONSTRATE CEILING PENETRATIONS AND CLOSURE ANGLES OR CHANNELS PROVIDE SUFFICIENT CLEARANCE TO ACCOMMODATE THE ANTICIPATED LATERAL DISPLACEMENT. EACH AREA SHALL BE PROVIDED WITH CLOSURE ANGLES OR CHANNELS IN ACCORDANCE WITH THE PERIMETER SUPPORT ANGLE DESCRIBED ABOVE AND HORIZONTAL RESTRAINTS OR BRACING.
5. CHANGES IN CEILING PLANE ELEVATION SHALL HAVE INDEPENDENT POSITIVE BRACING.
6. PARTITIONS THAT ARE TIED TO THE CEILING AND ALL PARTITIONS GREATER THAN 6 FEET IN HEIGHT SHALL BE LATERALLY BRACED TO THE STRUCTURE. SUCH BRACING SHALL BE INDEPENDENT OF ANY CEILING LATERAL FORCE BRACING.
7. POWER ACTUATED FASTENERS IN CONCRETE OR STEEL SHALL NOT BE USED FOR SUSTAINED TENSION LOADS OR FOR BRACE APPLICATIONS IN SEISMIC DESIGN CATEGORIES D, E, OR F UNLESS APPROVED FOR SEISMIC LOADING. POWER ACTUATED FASTENERS IN MASONRY ARE NOT PERMITTED UNLESS APPROVED FOR SEISMIC LOADING.
   A. EXCEPTIONS:
      a. POWER ACTUATED FASTENERS IN CONCRETE USED FOR SUPPORT OF ACOUSTICAL TILE OR LAY-IN PANEL SUSPENDED CEILING APPLICATIONS AND DISTRIBUTED SYSTEMS WHERE THE SERVICE LOAD ON ANY INDIVIDUAL FASTENER DOES NOT EXCEED 90 LB (400N).
      b. POWER ACTUATED FASTENERS IN STEEL WHERE THE SERVICE LOAD ON ANY INDIVIDUAL FASTENER DOES NOT EXCEED 250 LB (1,112N).

1 ACT - SEISMIC BRACING DETAIL

NOT TO SCALE

RICE fergus MILLER
ARCHITECTURE INTERIORS PLANNING VIZLAB
275 FIFTH STREET, SUITE 100
BREMERTON, WA 98337
360-377-8773
RFMARCH.COM

22020863
REGISTERED ARCHITECT
GUNNAR R. GLADICS
STATE OF WASHINGTON

STATION 57 ADDITION
GIG HARBOR FIRE AND MEDIC ONE
10521 CRESCENT VALLEY DR. NW
GIG HARBOR, WA 98332

PROJECT #	2022010.03
BID SET	
ISSUE DATE	JANUARY 8, 2024

REVISION SCHEDULE

AHJ APPROVAL STAMP

INTERIOR DETAILS

SHEET #
A70.01

CASEWORK GENERAL NOTES

1. INSTALL FLOORING BEFORE CASEWORK.
2. SCRIBE CASEWORK CABINETS TO WALL SURFACES.
3. PROVIDE MARINE GRADE PLYWOOD TOE BOX UNO.
4. PROVIDE 120° CONCEALED HINGES AT DOORS UNO.
5. PROVIDE FULL EXTENSION GLIDES AT DRAWERS UNO.

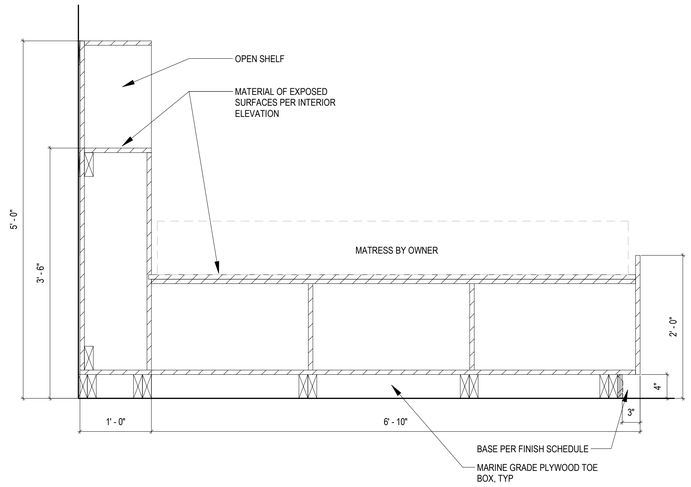

4 HEADBOARD
1" = 1'-0"

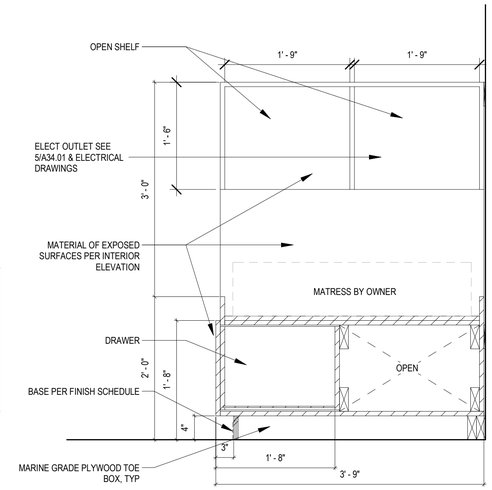

2 BED
1" = 1'-0"

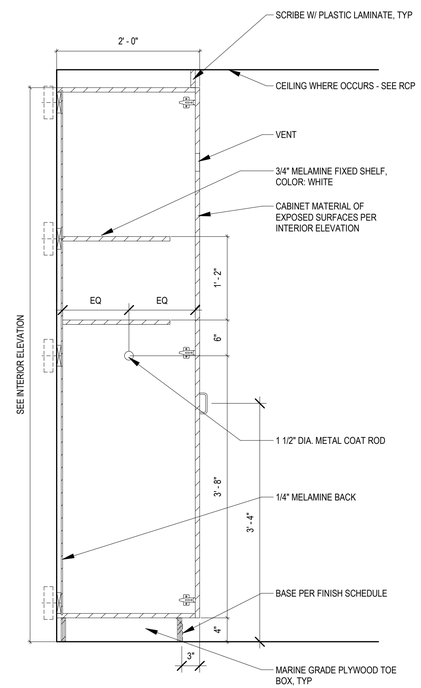

3 WARDROBE CABINET - ADA
1" = 1'-0"

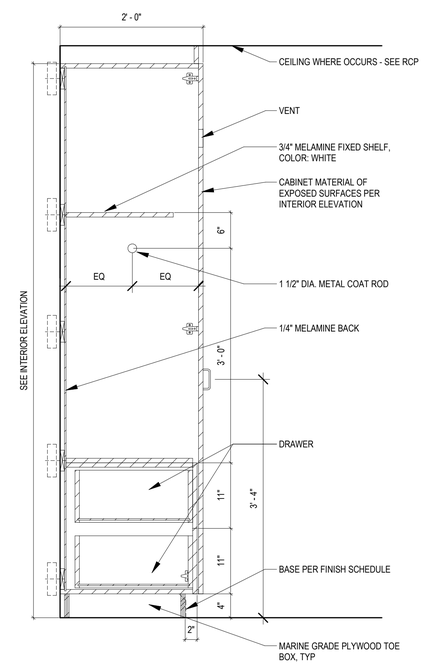

1 WARDROBE CABINET
1" = 1'-0"

RICE fergus MILLER
ARCHITECTURE INTERIORS PLANNING VIZLAB
275 FIFTH STREET, SUITE 100
BREMERTON, WA 98337
360-377-8773
RFMARCH.COM

22020863
REGISTERED ARCHITECT
GUNNAR R. GLADICS
STATE OF WASHINGTON

STATION 57 ADDITION
GIG HARBOR FIRE AND MEDIC ONE
10521 CRESCENT VALLEY DR. NW
GIG HARBOR, WA 98332

PROJECT #	2022010.03
BID SET	
ISSUE DATE	JANUARY 8, 2024

REVISION SCHEDULE

AHJ APPROVAL STAMP

CASEWORK DETAILS

SHEET #
A73.01

GENERAL

DRAWINGS INDICATE GENERAL AND TYPICAL DETAILS OF CONSTRUCTION. TYPICAL DETAILS AND NOTES SHOWN ON THESE DRAWINGS ARE PART OF THE CONSTRUCTION CONTRACT AND SHALL BE PROVIDED BY THE CONTRACTOR. TYPICAL DETAILS MAY NOT NECESSARILY BE INDICATED ON THE PLANS BUT SHALL APPLY AS SHOWN OR DESCRIBED IN THE DETAILS AND NOTES. WHERE CONDITIONS ARE NOT SPECIFICALLY INDICATED BUT ARE OF SIMILAR CHARACTER TO DETAILS SHOWN, SIMILAR DETAILS OF CONSTRUCTION SHALL BE USED.

STRUCTURAL DRAWINGS SHALL BE USED IN CONJUNCTION WITH ARCHITECTURAL DRAWINGS AND ALL OTHER CONTRACT DOCUMENTS FOR BIDDING AND CONSTRUCTION. CONTRACTOR SHALL VERIFY DIMENSIONS AND CONDITIONS FOR COMPATIBILITY AND SHALL NOTIFY ARCHITECT OF ALL DISCREPANCIES PRIOR TO CONSTRUCTION.

DISCREPANCIES: IN CASE OF DISCREPANCIES BETWEEN DRAWINGS, SPECIFICATIONS, REFERENCE STANDARDS, OR GOVERNING CODE, THE MORE STRINGENT REQUIREMENTS SHALL GOVERN. CONTRACTOR SHALL NOTIFY THE ENGINEER OF DISCREPANCIES AND OBTAIN DIRECTION PRIOR TO PROCEEDING. NOTES ON INDIVIDUAL STRUCTURAL DRAWINGS SHALL TAKE PRIORITY OVER GENERAL STRUCTURAL NOTES. DIMENSIONS NOTED IN THE DRAWINGS SHALL BE FOLLOWED. DO NOT SCALE DRAWINGS.

SPECIFICATIONS: REFER TO SPECIFICATIONS FOR INFORMATION IN ADDITION TO THESE NOTES AND DRAWINGS.

ARCHITECTURAL: REFER TO ARCHITECTURAL DRAWINGS FOR ELEVATIONS, SLOPES, DEPRESSIONS, NON-BEARING WALLS, FASCIA, ELEVATORS, STAIRS, CURBS, DRAINS, RAILINGS, WATERPROOFING, FINISHES, ETC.

CONTRACTOR-INITIATED CHANGES: SHALL BE SUBMITTED IN WRITING TO THE ARCHITECT FOR APPROVAL AT LEAST 10 WORKING DAYS PRIOR TO FABRICATION AND CONSTRUCTION. CHANGES SHOWN ON SHOP DRAWINGS OR SUBMITTALS ONLY WILL NOT SATISFY THIS REQUIREMENT.

CONTRACTOR RESPONSIBILITIES: DRAWINGS REPRESENT DESIGN OF STRUCTURE IN COMPLETED FORM. CONTRACTOR SHALL BE RESPONSIBLE FOR METHODS, SEQUENCES, AND SAFETY PRECAUTIONS REQUIRED TO PERFORM WORK.

CONTRACTOR SHALL DESIGN AND PROVIDE TEMPORARY SHORING AND BRACING OF ALL STRUCTURAL MEMBERS, EXISTING CONSTRUCTION, AND SOIL EXCAVATION AS REQUIRED. SHORING AND BRACING SHALL NOT BE REMOVED UNTIL ALL FINAL CONNECTIONS HAVE BEEN COMPLETED IN ACCORDANCE WITH THE DRAWINGS, AND MATERIALS HAVE ACHIEVED DESIGN STRENGTH.

EXISTING CONDITIONS: CONTRACTOR SHALL VERIFY ALL EXISTING DIMENSIONS, MEMBER SIZES, AND CONDITIONS PRIOR TO COMMENCING ANY WORK. ALL DIMENSIONS OF EXISTING CONSTRUCTION SHOWN ON THE DRAWINGS ARE INTENDED AS GUIDELINES ONLY AND MUST BE VERIFIED. EXISTING CONDITIONS SHOWN ON DRAWINGS ARE BASED EITHER ON SITE OBSERVATIONS, ORIGINAL DRAWINGS, OR WERE ASSUMED BASED ON EXPECTED CONDITIONS. IF EXISTING CONDITIONS DO NOT CLOSELY MATCH CONDITIONS SHOWN ON DRAWINGS, OR IF EXISTING MATERIALS ARE OF QUESTIONABLE OR SUBSTANDARD QUALITY, NOTIFY ENGINEER PRIOR TO COMMENCING ANY WORK.

STRUCTURAL OBSERVATION SHALL BE PERFORMED PER IBC SECTION 1704.6

SPECIAL INSPECTION PER IBC SECTION 1704, SHALL BE PERFORMED BY AN AGENCY APPROVED BY THE BUILDING OFFICIAL SELECTED BY THE CONTRACTOR AND AS OUTLINED IN THE STRUCTURAL INSPECTION SCHEDULE.

CODES

BUILDING CODE: ALL MATERIALS, WORKMANSHIP, DESIGN, AND CONSTRUCTION SHALL CONFORM TO THE DRAWINGS, SPECIFICATIONS AND THE INTERNATIONAL BUILDING CODE (IBC), 2018 EDITION ,AS AMENDED BY THE STATE OF WASHINGTON.

RISK CATEGORY: IV (IBC TABLE 1604.5)

STANDARDS: REFERENCE TO ASTM AND OTHER STANDARDS SHALL MEAN THE LATEST EDITION REFERENCED IN THE 2018 IBC, UNLESS NOTED IN THESE DOCUMENTS OR DESIGNATED BY THE GOVERNING CODE.

DESIGN CRITERIA

FLOOR DESIGN DATA:

IN ADDITION TO THE SELF WEIGHT, THE FOLLOWING LOADS ARE USED FOR DESIGN:

	UNIFORM LIVE LOAD (PSF)	CONCENTRATED LIVE LOAD (LBS)	SUPERIMPOSED DEAD LOAD (PSF)	REDUCIBLE (SEE NOTE)
ASSEMBLY AREAS, PLATFORMS MOVEABLE SEATS/LOBBIES	100	-	5	NO
CORRIDORS (UNO)	100	-	5	YES
OFFICES	50	2,000	5	YES
OFFICE PARTITIONS	15	-	-	NO

WHERE APPLICABLE, LIVE LOADS HAVE BEEN REDUCED PER IBC SECTION 1607.11.2

SNOW DESIGN DATA:

GROUND SNOW LOAD	P_g = 25 PSF (ASCE 7 SECTION 7.2)
FLAT-ROOF SNOW LOAD	P_f = 25 PSF MIN UNIFORM SNOW LOAD BASED ON SEAW WHITE PAPER 8-2010 AND I_S
ROOF SLOPE FACTOR	C_s = 1.0 (ASCE 7 SECTION 7.4)
SNOW EXPOSURE FACTOR	C_e = 1.0 (ASCE 7 TABLE 7.3-1)
SNOW LOAD IMPORTANCE FACTOR	I_S = 1.2 (ASCE 7 TABLE 1.5-2)
THERMAL FACTOR	C_t = 1.0 (ASCE 7 TABLE 7.3-2)
ROOF EXPOSURE	PARTIALLY EXPOSED (ASCE 7 TABLE 7.3-1)
TERRAIN CATEGORY	B (ASCE 7 SECTION 26.7)
DESIGN ROOF SLOPE	3 1/2 / 12

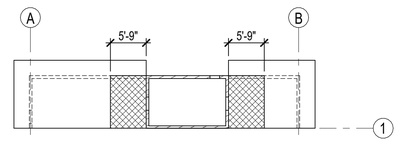

1. ROOF FRAMING SHALL BE DESIGNED FOR THE WORST-CASE EFFECTS RESULTING FROM THE FOLLOWING CASES.

   CASE 1: DRIFTS APPLIED IN ADDITION TO A FLAT ROOF SNOW LOAD OF Pf = 21 PSF.

   CASE 2: UNIFORM SNO LOADS OF 30 PSF.

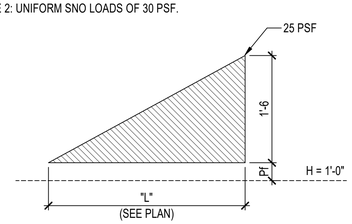

SNOW DRIFT LOAD AREA

WIND DESIGN DATA:

ANALYTICAL PROCEDURE	ENVELOPE PROCEDURE, ASCE 7 CHAPTER 28
TYPE OF STRUCTURE	FLEXIBLE (ASCE 7 SECTION 26.2)
BASIC WIND SPEED	V = 115 MPH, ULTIMATE 3 SECOND GUST (ASCE 7 FIG 26.5-1A - 26.5-1D) V_{ASD} = 89 MPH, NOMINAL 3 SECOND GUST (IBC EQUATION 16-33)
EXPOSURE CATEGORY	C (ASCE 7 SECTION 26.7.3)
INTERNAL PRESSURE COEFFICIENT	0.18 (ASCE 7 TABLE 26.13-1)
ENCLOSURE CLASSIFICATION	ENCLOSED (ASCE 7 SECTION 26.2)
COMPONENTS & CLADDING DESIGN PRESSURES (STRENGTH LEVEL) * *	WALLS: 35 PSF ; ROOF: 83 PSF (ASCE 7 SECTION 30.3.2)

* * COMPONENTS & CLADDING WIND PRESSURES LISTED ABOVE ARE BASED ON 10 SQUARE FOOT TRIBUTARY AREAS NEAR WALL CORNERS AND ROOF EDGES (EXCLUDING CORNER ZONES). REDUCED DESIGN PRESSURES MAY BE CALCULATED IN ACCORDANCE WITH ASCE 7-16 CHAPTER 30.

EARTHQUAKE DESIGN DATA:

SEISMIC-FORCE-RESISTING SYSTEM:	LIGHT FRAMED WOOD SHEAR WALLS
ANALYTICAL PROCEDURE:	EQUIVALENT LATERAL FORCE PROCEDURE
SEISMIC BASE SHEAR: (ASCE 7 SECTION 12.8.1)	V_E = 9 KIPS (STRENGTH LEVEL) (NORTH ADDITION) 3 KIPS (STRENGTH LEVEL) (NORTH ADDITION)
SEISMIC RESPONSE COEFFICIENT: (ASCE 7 SECTION 12.8.1.1)	C_S = 0.278
SEISMIC IMPORTANCE FACTOR I_e	1.5 (ASCE 7 TABLE 1.5-2)
SITE CLASS	D (ASCE 7 SECTION 11.4)

S_S = 1.506 (ASCE 7 SECTION 11.4.1)
S_1 = 0.525 (ASCE 7 SECTION 11.4.1)
S_{DS} = 1.004 (ASCE 7 SECTION 11.4.4)
S_{D1} NULL

SEISMIC DESIGN CATEGORY	D (ASCE 7 SECTION 11.6)
RESPONSE MODIFICATION COEFFICIENT	R = 6.5 (ASCE 7 TABLE 12.2-1)
SYSTEM OVERSTRENGTH FACTOR	Ω_0 = 3 (ASCE 7 TABLE 12.2-1)
DEFLECTION AMPLIFICATION FACTOR	C_d = 4 (ASCE 7 TABLE 12.2-1)

GEOTECHNICAL

SOIL BEARING SURFACES AND FILL SHALL BE PREPARED IN ACCORDANCE WITH THE GEOTECHNICAL REPORT AND INSPECTED BY THE OWNER APPOINTED GEOTECHNICAL ENGINEER [OR AN APPROVED TESTING AGENCY].

GEOTECHNICAL REPORT REFERENCE: COBALT GEOSCIENCES, LLC., LETTER TITLED UPDATED SEISMIC PARAMETERS, DATED JANUARY 18, 2023 AND KANE ENVIRONMENTAL, REPORT DATED APRIL 10, 2014

FOOTINGS SHALL BE FOUNDED AT LEAST 18" BELOW LOWEST ADJACENT EXTERIOR FINISHED GRADE. OVEREXCAVATE FOOTINGS TO COMPETENT BEARING PER THE OWNER APPOINTED GEOTECHNICAL ENGINEER AND PROVIDE COMPACTED BACKFILL PER THE OWNER APPOINTED GEOTECHNICAL ENGINEER OR PROJECT SPECIFICATIONS. THE OWNER APPOINTED GEOTECHNICAL ENGINEER SHALL APPROVE FOOTING EXCAVATION / PREPARATION PRIOR TO PLACEMENT OF ALL FOOTINGS. FOOTING DEPTHS AND ELEVATIONS SHOWN ON DRAWINGS ARE MINIMUM AND FOR GUIDANCE ONLY; CONTRACTOR SHALL ESTABLISH ACTUAL ELEVATIONS IN FIELD. BACKFILL BEHIND ALL WALLS AND PROVIDE FOR SUBSURFACE DRAINAGE AS RECOMMENDED IN THE GEOTECHNICAL REPORT.

SOIL PROFILE TYPE	SITE CLASS "D"
ALLOWABLE VERTICAL DESIGN PRESSURE	2,500 PSF

SUBMITTALS

SHOP DRAWINGS SHALL BE SUBMITTED TO THE ARCHITECT FOR REVIEW PRIOR TO FABRICATION OR CONSTRUCTION OF THESE ITEMS:

CONCRETE MIX DESIGN	WOOD I-JOISTS
CONCRETE REINFORCING	GLUED-LAMINATED MEMBERS
EMBEDDED ITEMS IN CONCRETE	

CONTRACTOR SHALL REVIEW AND STAMP SUBMITTALS PRIOR TO SUBMISSION. DIMENSIONS AND QUANTITIES ARE CONTRACTOR'S RESPONSIBILITY AND WILL NOT BE REVIEWED. CONTRACTOR SHALL BE RESPONSIBLE FOR ALL MATERIALS PLACED PRIOR TO RECEIPT OF REVIEWED SHOP DRAWINGS. CONTRACTOR SHALL ALLOW A MINIMUM OF 10 WORKING DAYS FOR REVIEW.

SHOP DRAWING SUBMITTALS PROCESSED BY THE ENGINEER ARE NOT CHANGE ORDERS. THE PURPOSE OF SHOP DRAWING SUBMITTALS BY THE CONTRACTOR IS TO DEMONSTRATE TO THE ENGINEER THAT THE CONTRACTOR UNDERSTANDS THE DESIGN CONCEPT BY INDICATING WHICH MATERIAL IS INTENDED TO BE FURNISHED AND INSTALLED AND BY DETAILING THE INTENDED FABRICATION AND INSTALLATION METHODS. IF DEVIATIONS, DISCREPANCIES, OR CONFLICTS BETWEEN SHOP DRAWING SUBMITTALS AND THE CONTRACT DOCUMENTS ARE DISCOVERED EITHER PRIOR TO OR AFTER SHOP DRAWING SUBMITTALS ARE PROCESSED BY THE ENGINEER, THE DESIGN DRAWINGS AND SPECIFICATIONS SHALL CONTROL AND SHALL BE FOLLOWED.

DEFERRED SUBMITTALS: DRAWINGS AND CALCULATIONS FOR BIDDER-DESIGNED COMPONENTS, SEALED BY THE WASHINGTON STATE REGISTERED PROFESSIONAL STRUCTURAL ENGINEER RESPONSIBLE FOR THE DESIGN, SHALL BE SUBMITTED TO THE ARCHITECT FOR REVIEW OF GENERAL CONFORMANCE WITH THE DESIGN OF THE BUILDING. DEFERRED SUBMITTALS INCLUDE:

SEISMIC BRACING AND ANCHORAGE OF MECHANICAL, ELECTRICAL AND PLUMBING UNITS AND FIXTURES

SUBMITTALS OF BIDDER-DESIGNED COMPONENTS SHALL INCLUDE LOCATIONS, MAGNITUDES, AND DIRECTIONS OF ALL FORCES TRANSFERRED TO THE STRUCTURE. CALCULATIONS SUBMITTED FOR BIDDER-DESIGNED COMPONENTS ARE FOR INFORMATION ONLY AND WILL NOT BE REVIEWED.

SEISMIC BRACING AND ANCHORAGE OF MECHANICAL UNITS AND OTHER MECHANICAL AND ELECTRICAL FIXTURES SHALL BE DESIGNED BY A REGISTERED STRUCTURAL ENGINEER IN THE STATE WHERE THE PROJECT IS LOCATED. THE MECHANICAL AND ELECTRICAL CONTRACTORS MUST RETAIN THE SERVICES OF A STRUCTURAL ENGINEER AND SHALL BE RESPONSIBLE FOR ALL COSTS RELATED TO THE PURCHASE AND INSTALLATION OF SEISMIC BRACING AND ANCHORAGE OF THEIR SYSTEMS.

RENOVATION:

DEMOLITION: CONTRACTOR SHALL VERIFY ALL EXISTING CONDITIONS BEFORE COMMENCING ANY DEMOLITION. SHORING SHALL BE INSTALLED TO SUPPORT EXISTING CONSTRUCTION AS REQUIRED AND IN A MANNER SUITABLE TO THE WORK SEQUENCES. EXISTING REINFORCING SHALL BE SAVED WHERE POSSIBLE AND AS NOTED ON DRAWINGS. SAW-CUTTING, IF AND WHERE USED, SHALL NOT CUT EXISTING REINFORCING THAT IS TO BE SAVED. DEMOLITION DEBRIS SHALL NOT BE ALLOWED TO DAMAGE OR OVERLOAD THE EXISTING STRUCTURE.

1. ALL NEW OPENINGS THROUGH EXISTING WALLS, SLABS, AND BEAMS SHALL BE ACCOMPLISHED BY SAW-CUTTING WHEREVER POSSIBLE. ALL NEW OPENINGS SHALL BE SAWCUT NEAT AND CLEAN; NO OVERCUTTING AT OPENING CORNERS SHALL BE ALLOWED, UNLESS NOTED OTHERWISE. AS REQUIRED, CORE DRILL CORNERS AND CHIP, GRIND, OR CUT THE CORNERS TO PROVIDE REQUIRED DIMENSIONS.
2. CONTRACTOR SHALL VERIFY ALL EXISTING CONDITIONS AND LOCATION OF MEMBERS PRIOR TO CUTTING ANY OPENINGS.
3. SMALL ROUND OPENINGS SHALL BE ACCOMPLISHED BY CORE DRILLING.

EXISTING TIMBER CONSTRUCTION: CONTRACTOR SHALL CHECK FOR DRYROT AT ALL EXTERIOR WALLS, EXISTING TOILET ROOM FLOORS AND WALLS, AND AREAS SHOWING WATER STAINS, WHERE WORK OCCURS NEXT TO THESE COMPONENTS. ALL ROT SHALL BE REMOVED AND DAMAGED MEMBERS SHALL BE REPLACED OR REPAIRED AS DIRECTED BY THE ENGINEER.

RICE fergus MILLER
ARCHITECTURE INTERIORS PLANNING VIZLAB
275 FIFTH STREET, SUITE 100
BREMERTON, WA 98337
360-377-8773
RFMARCH.COM

Reid Middleton
728 134th Street SW, Suite 200
Everett, Washington 98204
Ph: 425.741.3800
www.reidmiddleton.com

© Copyright 2023 Reid Middleton, Inc.

STATE OF WASHINGTON 43107 PROFESSIONAL ENGINEER
10/12/23

STATION 57 ADDITION
GIG HARBOR FIRE AND MEDIC ONE
10521 CRESCENT VALLEY DR. NW
GIG HARBOR, WA 98332

PROJECT # 2022010.03

BID SET

ISSUE DATE JANUARY 8, 2024

REVISION SCHEDULE		
1	BUILDING PERMIT REVIEW	7/5/2023

AHJ APPROVAL STAMP

GENERAL STRUCTURAL NOTES

SHEET #
S00.01

DATE/ TIME PRINTED: 10/10/2023 11:53:06 AM
Autodesk Docs://Gig Harbor Fire Capital Facilities/2022010_03 GHFMO_S3_STRU_2022.rvt

CONCRETE:

REFERENCE STANDARDS: CONCRETE SHALL CONFORM TO ALL REQUIREMENTS OF THE FOLLOWING DOCUMENTS, EXCEPT AS MODIFIED BELOW:

ACI 301	"SPECIFICATIONS FOR STRUCTURAL CONCRETE"
ACI 318	"BUILDING CODE REQUIREMENTS FOR STRUCTURAL CONCRETE"
ACI 304	"GUIDE FOR MEASURING, MIXING, TRANSPORTING, AND PLACING CONCRETE"
ACI 311	"GUIDE FOR CONCRETE INSPECTION"
ACI SP-15 *	"FIELD REFERENCE MANUAL"

* A COPY SHALL BE KEPT IN THE CONTRACTOR'S FIELD OFFICE AT ALL TIMES.

MATERIALS:

CEMENT	ASTM C150, C595
* AGGREGATES	ASTM C33
ADMIXTURES	ASTM C260, C494, C1017
* * FLY ASH	ASTM C618, CLASS F OR C

* AGGREGATES THAT EXHIBIT DELETERIOUS ACTIVITY WHEN EVALUATED IN ACCORDANCE WITH ASTM C33 APPENDIX XI SHALL NOT BE USED. THE 'SAND EQUIVALENT' FOR FINE AGGREGATE SHALL NOT BE LESS THAN 75.

* * MAXIMUM LOSS ON IGNITION SHALL BE 1%.

CONCRETE MIXES SHALL BE PROPORTIONED TO ACHIEVE A WORKABLE MIX THAT CAN BE PLACED WITHOUT SEGREGATION OR EXCESS FREE SURFACE WATER. MIX DESIGNS SHALL BE SUBMITTED TO THE ARCHITECT FOR REVIEW BY ENGINEER PRIOR TO USE. COMPLY WITH IBC SECTION 1904. MIXES SHALL MEET OR EXCEED THE FOLLOWING CRITERIA:

TYPE OF CONSTRUCTION	SPECIFIED COMPRESSIVE STRENGTH (f 'c) AT 28 DAYS, UNO	MAXIMUM WATER/CEMENT RATIO	EXPOSURE CLASS (ACI 318-19 TABLES 19.3.1.1 AND 19.3.2.1)
BELOW-GRADE CONCRETE (FOOTINGS)	3,500 PSI	0.55	F1, S0, W0, C1
MISCELLANEOUS EXTERIOR CONCRETE (EXTERIOR SLABS AND SITE WALLS)	4,500 PSI	0.45	F2, S0, W0, C1
INTERIOR SLABS-ON-GRADE	4,000 PSI	0.40 * *	F0, S0, W0, C1

* MIX SHALL BE PROPORTIONED SUCH THAT POST-TENSIONED SLAB DRYING SHRINKAGE NOT EXCEED 0.035 % AT 28 DAYS (LABORATORY CONDITIONS). SUBMIT STRENGTH AND SHRINKAGE TEST DATA AND MIX DESIGN TO THE ARCHITECT FOR REVIEW BY ENGINEER A MINIMUM OF TWO WEEKS PRIOR TO PLACING ANY CONCRETE.

* * WATER-CEMENTITIOUS MATERIAL RATIO FOR INTERIOR SLABS SHALL BE 0.40 UNLESS OTHERWISE NOTED.

CONCRETE MIXES SHALL MEET OR EXCEED THE REQUIREMENTS SPECIFIED ABOVE. MIXES SHALL BE SUBMITTED TO THE ENGINEER AND BUILDING OFFICIAL FOR APPROVAL TWO WEEKS PRIOR TO PLACING ANY CONCRETE AND SHALL INCLUDE THE AMOUNTS OF CEMENT, CEMENTITIOUS MATERIAL, FINE AND COARSE AGGREGATE, WATER AND ADMIXTURES, AS WELL AS THE WATER-CEMENT RATIO, SLUMP, CONCRETE YIELD AND SUBSTANTIATING STRENGTH DATA IN ACCORDANCE WITH ACI 318, CHAPTER 26. REVIEW OF MIX SUBMITTALS BY THE ENGINEER OF RECORD INDICATES ONLY THAT INFORMATION PRESENTED CONFORMS GENERALLY WITH CONTRACT DOCUMENTS. CONTRACTOR OR SUPPLIER MAINTAINS FULL RESPONSIBILITY FOR SPECIFIED PERFORMANCE.

ADMIXTURES: ALL CONCRETE, INCLUDING SLABS ON GRADE, SHALL HAVE A WATER-REDUCING ADMIXTURE COMPLYING WITH ASTM C494 ADDED IN ACCORDANCE WITH MANUFACTURER'S INSTRUCTIONS. CALCIUM CHLORIDE OR OTHER CHLORIDE ADMIXTURES SHALL NOT BE USED.

ALL HORIZONTAL SURFACES EXPOSED TO WEATHER SHALL CONTAIN AN AIR-ENTRAINING AGENT COMPLYING WITH ASTM C260. THE AMOUNT OF ENTRAINED AIR SHALL BE IN ACCORDANCE WITH ACI 318-19 TABLE 19.3.3.1. TESTS FOR AIR CONTENT SHALL BE MADE AT THE DISCHARGE END OF THE TRUCK'S PLACING HOSE IN ACCORDANCE WITH ASTM C173.

WATER/CEMENT RATIO SHALL BE MEASURED BY WEIGHT AND BE BASED ON TOTAL CEMENTITIOUS MATERIAL, INCLUDING CEMENT AND POZZOLANS SUCH AS FLY ASH AND SILICA FUME.

MAXIMUM AGGREGATE SIZE SHALL BE 1 1/2", BUT NOT MORE THAN 3/4 TIMES THE CLEAR DISTANCE BETWEEN REINFORCING BARS NOR 1/5 TIMES THE NARROWEST DIMENSION BETWEEN SIDES OF FORMS. MAXIMUM AGGREGATE SIZE FOR SLABS ON GRADE SHALL BE 1/3 TIMES THE SLAB THICKNESS.

SLUMP REQUIRED FOR PROPER PLACEMENT SHALL BE DETERMINED BY CONTRACTOR AND SUPPLIER, AND INCLUDED IN MIX DESIGN SUBMITTALS. FIELD MEASURED SLUMP SHALL CONFORM TO SUBMITTED CONCRETE MIX DESIGN. SLUMP SHALL CONFORM TO ASTM C94.

CIVIL AND SITE COMPONENTS: CONCRETE MIXES FOR CURBS, GUTTERS, SIDEWALKS, EXTERIOR DRIVEWAYS AND OTHER CONCRETE ITEMS OUTSIDE OF THE BUILDING ENVELOPE SHALL MEET THE REQUIREMENTS OF SITE PLANS AND SPECIFICATIONS, UNLESS NOTED OTHERWISE. WHERE SITE COMPONENT CONCRETE MATERIALS ARE NOT SPECIFICALLY NOTED, THE ABOVE REQUIREMENTS FOR "CONCRETE EXPOSED TO SALT AND/OR DE-ICING CHEMICALS" SHALL GOVERN.

EMBEDDED ITEMS: CONDUIT AND SLEEVES SHALL NOT BE EMBEDDED IN OR PASS THROUGH CONCRETE WITHOUT APPROVAL. ALUMINUM ITEMS SHALL NOT BE EMBEDDED IN CONCRETE. SUBMIT CONDUIT LAYOUT AND EMBEDDED ITEM PLANS TO THE ARCHITECT FOR REVIEW BY ENGINEER PRIOR TO PLACING CONCRETE.

BONDING AGENT SHALL BE EPOXY RESIN BASED CONFORMING TO ASTM C881, TYPE V, GRADE 2. USE WHERE NEW CONCRETE IS PLACED AGAINST PREVIOUSLY PLACED OR EXISTING CONCRETE. PLACE IN STRICT ACCORDANCE WITH MANUFACTURER'S INSTRUCTIONS, INCLUDING PREPARATION OF EXISTING SURFACES.

NON-SHRINK GROUT SHALL HAVE A MINIMUM COMPRESSIVE STRENGTH OF 6,000 PSI AT 28 DAYS, BUT NOT LESS THAN THE MATERIAL ON WHICH IT IS PLACED UPON.

COORDINATION: SEE ARCHITECTURAL DRAWINGS FOR LOCATIONS AND DIMENSIONS OF DOOR AND WINDOW OPENINGS IN CONCRETE WALLS. SEE MECHANICAL DRAWINGS FOR SIZE AND LOCATION OF MISCELLANEOUS MECHANICAL OPENINGS THROUGH CONCRETE CONSTRUCTION. SEE ARCHITECTURAL DRAWINGS FOR ALL GROOVES, NOTCHES, CHAMFERS, FEATURE STRIPS, COLOR, TEXTURE, AND OTHER FINISH DETAILS AT EXPOSED CONCRETE SURFACES.

CONCRETE REINFORCEMENT

REFERENCE STANDARDS: CONCRETE REINFORCEMENT SHALL CONFORM TO ALL REQUIREMENTS OF THEFOLLOWING CODES, SPECIFICATIONS, AND STANDARDS, EXCEPT AS MODIFIED BELOW:

ACI 301	"SPECIFICATIONS FOR STRUCTURAL CONCRETE"
ACI SP-66	"ACI DETAILING MANUAL"
ACI 318	"BUILDING CODE REQUIREMENTS FOR STRUCTURAL CONCRETE"
CRSI	"PLACING REINFORCING BARS"
CRSI	"MANUAL OF STANDARD PRACTICE" MSP-1
WRI	"WELDED WIRE FABRIC MANUAL OF STANDARD PRACTICE"

MATERIALS:

DEFORMED BARS	ASTM A615, GRADE 60
DEFORMED BAR ANCHORS	ASTM A496, 75 KSI YIELD
BAR SUPPORTS	CONFORM TO CHAPTER 3, CRSI MSP-1
WELDED HEADED STUDS	ASTM A108

REINFORCEMENT SHALL BE PLACED AND SUPPORTED IN ACCORDANCE WITH CRSI MSP-1. REINFORCEMENT SHALL BE DETAILED IN ACCORDANCE WITH ACI SP-66. NO BENDING OR STRAIGHTENING OF REINFORCEMENT WILL BE PERMITTED AFTER PARTIAL EMBEDMENT IN CONCRETE.

REINFORCING STEEL SHALL BE DETAILED (INCLUDING HOOKS AND BENDS) IN ACCORDANCE WITH ACI 315 AND ACI 318. LAP ALL CONTINUOUS REINFORCEMENT (#5 AND SMALLER) 40 BAR DIAMETERS OR 2'-0" MINIMUM UNLESS OTHERWISE NOTED. PROVIDE CORNER BARS AT ALL WALL AND FOOTING INTERSECTIONS. LAP CORNER BARS (#5 AND SMALLER) 40 BAR DIAMETERS OR 2'-0" MINIMUM. LAPS OF LARGER BARS SHALL BE MADE IN ACCORDANCE WITH ACI 318, CLASS B. LAP ADJACENT MATS OF WELDED WIRE FABRIC A MINIMUM OF 8" AT SIDES AND ENDS.

NO BARS PARTIALLY EMBEDDED IN HARDENED CONCRETE SHALL BE FIELD BENT UNLESS OTHERWISE NOTED ON THE DRAWINGS OR APPROVED BY THE ENGINEER.

WELDING OR TACK WELDING OF REINFORCING BARS TO OTHER BARS OR TO PLATES, ANGLES, ETC IS PROHIBITED, EXCEPT WHERE SPECIFICALLY NOTED IN DETAILS. WHERE WELDING IS NOTED, IT SHALL BE DONE BY AWS/WABO CERTIFIED WELDERS USING E9018 ELECTRODES. WELDING PROCEDURES SHALL COMPLY WITH AWS-D1.4.

CONCRETE COVER: UNLESS NOTED OTHERWISE, MINIMUM CONCRETE COVER FOR REINFORCEMENT SHALL BE:

SLABS ON GRADE	2" BOTTOM
FOOTINGS	3" (EXCEPT 2" TOP AND FORMED SIDES)

CONCRETE ANCHORAGE

EXPANSION BOLTS INTO CONCRETE SHALL BE ONE OF THE FOLLOWING. INSTALL PER MANUFACTURER'S INSTRUCTIONS AND APPLICABLE IAPMO OR ICC-ES REPORTS. NOMINAL EMBEDMENT DEPTH SHALL BE AS NOTED BELOW, UNLESS NOTED OTHERWISE.

HILTI KWIK BOLT TZ2 (ESR-4266)	
3/8" EXPANSION BOLTS	3"
1/2" EXPANSION BOLTS	3 3/4"
5/8" EXPANSION BOLTS	4 1/2"
3/4" EXPANSION BOLTS	5 1/2"
SIMPSON STRONG-BOLT 2 (ESR 3037)	
3/8" EXPANSION BOLTS	2 7/8"
1/2" EXPANSION BOLTS	3 7/8"
5/8" EXPANSION BOLTS	5 1/8"
3/4" EXPANSION BOLTS	5 3/4"
DEWALT POWER STUD+ SD2 (ESR 2502)	
3/8" EXPANSION BOLTS	2 3/8"
1/2" EXPANSION BOLTS	3 3/4"
5/8" EXPANSION BOLTS	4 7/8"
3/4" EXPANSION BOLTS	5 3/4"

EPOXY-GROUTED RODS OR REBAR TO CONCRETE SHALL BE GROUTED WITH ONE OF THE FOLLOWING: SIMPSON SET-3G (ESR-4057), DEWALT PURE110+ (ESR-3298), OR HILTI HIT-HY200 (ESR-3187). INSTALL PER MANUFACTURER'S INSTRUCTIONS AND APPLICABLE IAPMO OR ICC-ES REPORTS. HOLES DRILLED FOR EPOXY GROUTED INSTALLATIONS SHALL NOT BE CORE-DRILLED UNLESS SPECIFICALLY APPROVED BY THE STRUCTURAL ENGINEER AND ROUGHENED PER THE ADHESIVE MANUFACTURER'S RECOMMENDATIONS. HOLES SHALL ALSO NOT BE WATER-FILLED UNLESS SPECIFICALLY APPROVED BY THE STRUCTURAL ENGINEER. HOLES DRILLED FOR EPOXY GROUTED INSTALLATIONS SHALL BE KEPT DRY PRIOR TO ADHESIVE INJECTION, UNLESS OTHERWISE APPROVED BY THE STRUCTURAL ENGINEER.

EMBEDMENT DEPTHS SHALL BE AS NOTED BELOW, UNLESS NOTED OTHERWISE.

3/8" ROD OR #3 BAR	4"
1/2" ROD OR #4 BAR	5"
5/8" ROD OR #5 BAR	7"
3/4" ROD OR #6 BAR	9"
7/8" ROD OR #7 BAR	12"
1" ROD OR #8 BAR	15"

HEAVY DUTY SCREW ANCHORS INTO CONCRETE SHALL BE SIMPSON TITEN HD (ESR-2713), DEWALT SCREW-BOLT+ (ESR-3889) OR HILTI KWIK KH-EZ (ESR-3027). STAINLESS STEEL HEAVY DUTY SCREW ANCHORS INTO CONCRETE SHALL BE SIMPSON TITEN HD (ER-493).

DRIVE PINS AND OTHER POWER-ACTUATED FASTENERS SHALL BE ITW RAMSET/RED HEAD (ESR-1799), HILTI XU LOW VELOCITY (ESR-2269), DEWALT POWER-DRIVEN FASTENERS (ESR-2024), OR SIMPSON POWDER ACTUATED FASTENERS (ESR-2138). DRIVE PINS OR OTHER POWER- ACTUATED FASTENERS SHALL NOT BE USED IN SUSTAINED TENSION EXCEPT AS ALLOWED BY ASCE 7-16 SECTION 13.4.5.

POST-INSTALLED ANCHORS SHALL NOT BE USED AS SUBSTITUTES FOR CAST-IN-PLACE ANCHOR BOLTS OR REINFORCING STEEL UNLESS SPECIFICALLY APPROVED BY THE STRUCTURAL ENGINEER.

PRODUCT SUBSTITUTES PROPOSED BY THE CONTRACTOR SHALL BE SUBMITTED FOR REVIEW WITH IAPMO OR ICC-ES REPORTS INDICATING EQUIVALENT OR GREATER LOAD CAPACITIES.

NO REINFORCING BARS SHALL BE CUT TO PLACE POST-INSTALLED ANCHORS. ALL DEFECTIVE ANCHOR HOLES SHALL BE GROUTED WITH FLOWABLE NON-SHRINK, NON-METALLIC, CEMENTITIOUS GROUT WITH MATCHING 28-DAY CONCRETE COMPRESSIVE STRENGTH, AND A NEW HOLE DRILLED A MINIMUM OF 3 BOLT DIAMETERS AWAY.

RICE fergus MILLER
ARCHITECTURE INTERIORS PLANNING VIZLAB
275 FIFTH STREET, SUITE 100
BREMERTON, WA 98337
360-377-8773
RFMARCH.COM

Reid Middleton
728 134th Street SW, Suite 200
Everett, Washington 98204
Ph: 425.741.3800
www.reidmiddleton.com
© Copyright 2023 Reid Middleton, Inc.

STATE OF WASHINGTON 43107 PROFESSIONAL ENGINEER
10/12/23

STATION 57 ADDITION
GIG HARBOR FIRE AND MEDIC ONE
10521 CRESCENT VALLEY DR. NW
GIG HARBOR, WA 98332

PROJECT # 2022010.03
BID SET
ISSUE DATE JANUARY 8, 2024

REVISION SCHEDULE		

AHJ APPROVAL STAMP

GENERAL STRUCTURAL NOTES

SHEET #
S00.02

WOOD

REFERENCE STANDARDS: WOOD SHALL CONFORM TO ALL REQUIREMENTS OF THE FOLLOWING DOCUMENTS:

ANSI/AWC NDS	"NATIONAL DESIGN SPECIFICATION FOR WOOD CONSTRUCTION"
ANSI/AWC SDPWS	" SPECIAL DESIGN PROVISIONS FOR WIND AND SEISMIC"
AWC WCD No. 4	"WOOD CONSTRUCTION DATA - PLANK AND BEAM FRAMING FOR RESIDENTIAL BUILDINGS"
AWC WFCM	"WOOD FRAME CONSTRUCTION MANUAL FOR ONE- AND TWO-FAMILY DWELLINGS"
ANSI/APA A190.1	"STRUCTURAL GLUED LAMINATED TIMBER"
ANSI 117	"STANDARD SPECIFICATIONS FOR STRUCTURAL GLUED LAMINATED TIMBER OF SOFTWOOD SPECIES"
AWPA C1	"ALL TIMBER PRODUCTS-PRESERVATIVE TREATMENT BY PRESSURE PROCESS"
TPI 1	"NATIONAL DESIGN STANDARD FOR METAL-PLATE-CONNECTED WOOD TRUSS CONSTRUCTION"

ALL WOOD FRAMING DETAILS SHALL BE CONSTRUCTED TO THE MINIMUM STANDARDS OF THE IBC. MINIMUM NAILING SHALL CONFORM TO IBC TABLE 2304.10.2 OR CURRENT ICC-ES REPORT ESR-1539, UNLESS OTHERWISE NOTED. COORDINATE THE SIZE AND LOCATION OF ALL OPENINGS WITH MECHANICAL AND ARCHITECTURAL DRAWINGS. INSTALL WASHERS UNDER THE HEADS AND NUTS OF ALL BOLTS AND LAG SCREWS BEARING ON WOOD. INSTALLATION OF LAG SCREWS SHALL CONFORM TO NDS SECTION 12.1.4, AND INSTALLATION OF BOLTS SHALL CONFORM TO NDS SECTION 12.1.3.

WALL FRAMING: TWO STUDS MINIMUM SHALL BE INSTALLED AT THE ENDS OF ALL WALLS, UNLESS OTHERWISE NOTED. INSTALL SOLID BLOCKING FOR WOOD COLUMNS THROUGH FLOOR SPACES TO SUPPORTS BELOW.

ALL STUD WALLS SHALL HAVE THEIR LOWER WOOD PLATES ATTACHED TO WOOD FRAMING BELOW WITH 16d NAILS AT 12" OC STAGGERED OR BOLTED TO CONCRETE WITH 5/8" DIAMETER ANCHOR BOLTS @ 4'-0"oc PER IBC SECTION 2308.3 (EMBED 7"), UNLESS OTHERWISE NOTED. 3" x 3" x 0.229" PLATE WASHERS SHALL BE USED WITH ALL SILL PLATE ANCHOR BOLTS PER IBC SECTION 2308.3.1.1 AND SDPWS SECTION 4.3.6.4.3. INDIVIDUAL MEMBERS OF BUILT-UP STUD POSTS SHALL BE NAILED TO EACH OTHER WITH 16d @ 12"oc STAGGERED.

FLOOR AND ROOF FRAMING: INSTALL DOUBLE JOISTS UNDER ALL PARALLEL PARTITIONS THAT EXTEND OVER MORE THAN HALF THE JOIST LENGTH AND AROUND ALL OPENINGS IN FLOORS OR ROOFS. INSTALL SOLID BLOCKING AT ALL BEARING POINTS. TOENAIL JOISTS TO SUPPORTS WITH TWO 16d NAILS. ATTACH TIMBER JOISTS TO FLUSH HEADERS OR BEAMS WITH SIMPSON METAL JOIST HANGERS IN ACCORDANCE WITH NOTES ABOVE. NAIL ALL MULTI-JOIST BEAMS TOGETHER WITH 16d @ 12" OC STAGGERED.

ROOF, FLOOR & WALL SHEATHING SHALL BE APA RATED, EXTERIOR OR EXPOSURE 1 STRUCTURAL I PLYWOOD OR ORIENTED STRAND BOARD (OSB) IN CONFORMANCE WITH IBC SECTION 2303.1.5. SHEATHING SHALL BE MANUFACTURED UNDER THE PROVISIONS OF VOLUNTARY PRODUCT STANDARDS PS 1-09, PS 2-10, OR APA PRP-108 PERFORMANCE STANDARDS AND POLICIES FOR STRUCTURAL USE PANELS. SEE DRAWINGS FOR THICKNESS, SPAN RATING, AND NAILING REQUIREMENTS. UNLESS OTHERWISE NOTED, WALL SHEATHING SHALL BE 1/2" (NOMINAL) WITH SPAN RATING OF 24/0. GLUE FLOOR SHEATHING TO ALL SUPPORTING MEMBERS WITH ADHESIVE CONFORMING TO APA SPECIFICATION AFG-01.

ROOF AND FLOOR SHEATHING SHALL BE LAID UP WITH GRAIN PERPENDICULAR TO SUPPORTS AND NAILED AS SHOWN ON THE DRAWINGS. INSTALL APPROVED PANEL EDGE CLIPS CENTERED BETWEEN JOISTS/TRUSSES AT UNBLOCKED ROOF SHEATHING EDGES. ALL FLOOR SHEATHING EDGES SHALL HAVE APPROVED TONGUE-AND-GROOVE JOINTS OR SHALL BE SUPPORTED WITH SOLID BLOCKING. ALLOW 1/8" SPACING AT ALL PANEL EDGES AND ENDS OF FLOOR AND ROOF SHEATHING. TOENAIL BLOCKING TO SUPPORTS WITH 16d @ 12" OC. AT BLOCKED FLOOR AND ROOF DIAPHRAGMS, INSTALL FLAT 2x BLOCKING AT ALL UNFRAMED PANEL EDGES AND NAIL WITH EDGE NAILING SPECIFIED.

ALL PRESSURE-TREATED (P.T.) WOOD MEMBERS SPECIFIED ON THE DRAWINGS SHALL BE PRESSURE-TREATED WITH ALKALINE COPPER QUAT (ACQ) OR COPPER AZOLE (CA) PRESERVATIVES, CATEGORY UC3B, UNLESS OTHERWISE NOTED. WOOD SHALL BE TREATED IN ACCORDANCE WITH AWPA STANDARD U1. AMMONIACAL COPPER ZINC ARSENATE (ACZA) PRESERVATIVE, OR OTHER PRESERVATIVES WITH AMMONIA CARRIERS, SHALL NOT BE USED. SEE GENERAL STRUCTURAL NOTES BELOW FOR MATERIAL REQUIREMENTS OF CONNECTORS AND FASTENERS IN CONTACT WITH PRESSURE-TREATED MEMBERS. INSTALL (2) LAYERS OF ASPHALT-IMPREGNATED BUILDING PAPER BETWEEN UNTREATED LEDGERS, BLOCKING, ETC., AND CONCRETE OR MASONRY.

FIRE-RETARDANT-TREATED (FRT) LUMBER AND WOOD STRUCTURAL PANELS SHALL BE MANUFACTURED IN ACCORDANCE WITH IBC SECTION 2303.2 AND SHALL BE IMPREGNATED WITH CHEMICALS BY A FIRE-RETARDANT-TREATED (FRT) LUMBER AND WOOD STRUCTURAL PANELS SHALL BE MANUFACTURED IN ACCORDANCE WITH IBC SECTION 2303.2 AND SHALL BE IMPREGNATED WITH CHEMICALS BY A PRESSURE PROCESS OR OTHER MEANS DURING MANUFACTURE, AND SHALL HAVE, WHEN TESTED IN ACCORDANCE WITH ASTM E84 OR UL 723, A LISTED FLAME SPREAD INDEX OF 25 OR LESS AND SHOW NO EVIDENCE OF SIGNIFICANT PROGRESSIVE COMBUSTION WHEN THE TEST IS CONTINUED FOR AN ADDITIONAL 20-MINUTE PERIOD. ADDITIONALLY, THE FLAME FRONT SHALL NOT PROGRESS MORE THAN 10.5 FEET (3200 MM) BEYOND THE CENTERLINE OF THE BURNERS AT ANY TIME DURING THE TEST. SEE IBC SECTION 2303.2 FOR ADDITIONAL REQUIREMENTS.FRT LUMBER AND FRT LUMBER USED FOR WOOD TRUSSES SHALL HAVE A CURRENT ICC-ES OR IAPMO EVALUATION REPORT AND SHALL BE LABELED IN ACCORDANCE WITH IBC SECTION 2303.2.4.

THE FOLLOWING FRT STRENGTH ADJUSTMENTS FACTORS HAVE BEEN APPLIED TO THE DESIGN VALUES FOR UNTREATED LUMBER AND WOOD STRUCTURAL PANELS. THE FRT MANUFACTURER'S STRENGTH REDUCTION FACTORS SHALL BE DETERMINED IN ACCORDANCE WITH IBC SECTION 2303.2.5, SHALL BE CLEARLY STATED IN THE PRODUCT SUBMITTAL, AND SHALL NOT REDUCE THE DESIGN VALUES FOR UNTREATED LUMBER AND WOOD STRUCTURAL PANELS MORE THAN THE FOLLOWING STRENGTH REDUCTION FACTORS, UNLESS OTHERWISE APPROVED BY THE STRUCTURAL ENGINEER.NO EVIDENCE OF SIGNIFICANT PROGRESSIVE COMBUSTION WHEN THE TEST IS CONTINUED FOR AN ADDITIONAL 20-MINUTE PERIOD. ADDITIONALLY, THE FLAME FRONT SHALL NOT PROGRESS MORE THAN 10.5 FEET (3200 MM) BEYOND THE CENTERLINE OF THE BURNERS AT ANY TIME DURING THE TEST. SEE IBC SECTION 2303.2 FOR ADDITIONAL REQUIREMENTS.

FLEXURAL STRESS	Fb: 0.90
COMPRESSION PARALLEL TO GRAIN	Fc: 0.91
HORIZONTAL SHEAR	Fv: 0.94
TENSION PARALLEL TO GRAIN	Ft: 0.87
FASTENER / CONNECTOR DESIGN	0.80
MODULUS OF ELASTICITY	E: 0.98

STRENGTH REDUCTION FACTORS AND MAXIMUM LOADS AND SPANS FOR FIRE-RETARDANT-TREATED (FRT) WOOD STRUCTURAL PANELS SHALL BE DETERMINED IN ACCORDANCE WITH IBC SECTION 2303.2.5.1 AND SHALL BE CLEARLY STATED IN THE PRODUCT SUBMITTAL. MINIMUM SUPERIMPOSED ALLOWABLE UNIFORM LOADS FOR FRT WOOD STRUCTURAL PANELS SHALL EXCEED THE FOLLOWING:

5/8" FRT PLYWOOD PANEL SPAN RATING 40/20:	80 PSF AT 24" OC SUPPORT SPACING
3/4" FRT PLYWOOD PANEL SPAN RATING 48/24:	250 PSF AT 16" OC SUPPORT SPACING

SAWN LUMBER: SAWN LUMBER SHALL BE IDENTIFIED BY THE GRADE MARK OF A LUMBER GRADING OR INSPECTION AGENCY APPROVED BY AN ACCREDITATION BODY COMPLYING WITH US DEPARTMENT OF COMMERCE PS20. FRAMING LUMBER SHALL BE KILN DRIED OR MC-19, AND GRADED AND MARKED IN CONFORMANCE WITH W.C.L.B. STANDARD GRADING RULES FOR WEST COAST LUMBER NO. 17. SAWN LUMBER SPECIES AND GRADES SHALL BE AS FOLLOWS:

JOISTS: (2x MEMBERS)	DOUGLAS FIR NO. 2 Fb = 900 PSI, Fv = 180 PSI, E = 1600 KSI
(3x AND 4x MEMBERS)	DOUGLAS FIR NO. 1 Fb = 1000 PSI, Fv = 180 PSI, E = 1700 KSI
BEAMS AND STRINGERS: (INCLUDING 6x AND LARGER MEMBERS)	DOUGLAS FIR NO. 1 Fb = 1350 PSI, Fv = 170 PSI, E = 1600 KSI
POSTS: (4x MEMBERS)	DOUGLAS-FIR NO. 1 Fc = 1500 PSI, E = 1700 KSI
(6x AND LARGER MEMBERS)	DOUGLAS FIR NO. 1 Fc = 1000 PSI, E = 1600 KSI
STUDS, PLATES, LEDGERS & MISCELLANEOUS LIGHT FRAMING:	DOUGLAS FIR NO. 2 Fb = 900 PSI, E = 1600 PSI, Fc = 1350 PSI, Ft = 575 PSI

GLUED LAMINATED MEMBERS (GLULAMS) SHALL BE MANUFACTURED IN CONFORMANCE WITH ANSI/APA A 190.0 AND ASTM D3737. EACH MEMBER SHALL BEAR AN AITC OR APA IDENTIFICATION MARK AND BE ACCOMPANIED BY AN AITC CERTIFICATE OF CONFORMANCE. GLULAMS SHALL BE INDUSTRIAL GRADE WHERE NOT EXPOSED TO VIEW AND ARCHITECTURAL GRADE WHERE EXPOSED TO VIEW. GLULAMS SHALL HAVE THE STRENGTH GRADES AS NOTED BELOW:

SIMPLE SPAN BEAMS:	DOUGLAS FIR 24F-V4 Fb = 2400 PSI, Fv = 265 PSI, E = 1800 KSI
CONTINUOUS OR CANTILEVER BEAMS:	DOUGLAS FIR 24F-V8 Fb = 2400 PSI, Fv = 265 PSI, E = 1800 KSI

HORIZONTAL GLULAM MEMBERS AND INCLINED MEMBERS OF LESS THAN 1:1 SLOPE SHALL HAVE A RADIUSED CAMBER OF 3,500 FT. UNLESS NOTED OTHERWISE.

GLUED LAMINATED MEMBERS EXPOSED TO WEATHER OR MOISTURE SHALL BE TREATED WITH A NON-CORROSIVE, APPROVED PRESERVATIVE.

ENGINEERED LUMBER: EACH PIECE SHALL BEAR A STAMP OR STAMPS NOTING THE NAME AND PLANT NUMBER OF THE MANUFACTURER, THE GRADE, THE NER OR ICC-ES REPORT NUMBER, AND THE QUALITY CONTROL AGENCY. ALL MEMBERS SHALL BE MANUFACTURED WITH AN APPROVED ADHESIVE.

BEAMS:	LAMINATED VENEER LUMBER (LVL) Fb = 2,600 PSI, E = 1,900 KSI, Fv = 285 PSI LAMINATED STRAND LUMBER (LSL) Fb = 2,250 PSI, E = 1,500 KSI, Fv = 400 PSI (DEPTH > = 9 1/2") Fb = 1,700 PSI, E = 1,300 KSI, Fv = 400 PSI (DEPTH < 9 1/2") PARALLEL STRAND LUMBER (PSL) Fb = 2,900 PSI, E = 2,000 KSI, Fv = 290 PSI
RIM BOARD & BLOCKING:	LAMINATED STRAND LUMBER (LSL) Fb = 1,700 PSI, E = 1,300 KSI, Fv = 400 PSI
STUDS:	LAMINATED VENEER LUMBER (LVL) Fb = 2,900 PSI, E = 2,000 KSI, Fv = 285 PSI, Fc = 2,635 PSI LAMINATED STRAND LUMBER (LSL) Fb = 2,250 PSI, E = 1,500 KSI, Fv = 400 PSI, Fc = 1,950 PSI (WIDTH > 7 1/4") Fb = 1,700 PSI, E = 1,300 KSI, Fv = 400 PSI, Fc = 1,400 PSI (WIDTH < 7 1/4")
POSTS:	PARALLEL STRAND LUMBER (PSL) Fb = 2,400 PSI, E = 1,800 KSI, Fv = 290 PSI, Fc = 2,500 PSI

DESIGN SHOWN ON THE DRAWINGS IS BASED ON LUMBER MANUFACTURED BY REDBUILT LLC IN ACCORDANCE WITH ICC-ESR-2993. ALTERNATE ENGINEERED LUMBER MAY BE USED SUBJECT TO REVIEW AND APPROVAL BY THE ARCHITECT AND STRUCTURAL ENGINEER. A CURRENT NER OR ICC-ES REPORT AND A LIST STATING THE ITEM-FOR-ITEM SUBSTITUTION MUST BE SUBMITTED TO THE STRUCTURAL ENGINEER FOR ANY PROPOSED SUBSTITUTES.

ENGINEERED WOOD I-JOISTS SHALL BE FURNISHED AND INSTALLED IN CONFORMANCE WITH THE MANUFACTURER'S INSTRUCTIONS. ALL NECESSARY BRIDGING, BLOCKING, BLOCKING PANELS, STIFFENERS, ETC., SHALL BE DETAILED AND FURNISHED BY THE MANUFACTURER. PERMANENT AND TEMPORARY BRIDGING SHALL BE INSTALLED IN CONFORMANCE WITH MANUFACTURER'S INSTRUCTIONS. ALL JOIST HANGERS AND OTHER HARDWARE SHALL BE COMPATIBLE IN SIZE WITH ENGINEERED WOOD I-JOISTS PROVIDED.

DESIGN SHOWN ON THE DRAWINGS IS BASED ON JOISTS MANUFACTURED BY REDBUILT LLC IN ACCORDANCE WITH ICC-ES REPORT NO. ESR-2994. ALTERNATE ENGINEERED WOOD I-JOISTS MAY BE USED SUBJECT TO REVIEW AND APPROVAL BY THE STRUCTURAL ENGINEER. A CURRENT NER OR ICC-ES REPORT AND A LIST STATING THE ITEM-FOR-ITEM SUBSTITUTION MUST BE SUBMITTED TO THE STRUCTURAL ENGINEER FOR ANY PROPOSED SUBSTITUTES. THE CONTRACTOR SHALL BE RESPONSIBLE FOR ALL ENGINEERING COSTS RELATING TO REVIEW AND/OR RE-DESIGN TO ACCOMMODATE PROPOSED SUBSTITUTIONS.

DESIGN LOADS SHALL BE AS FOLLOWS, UNLESS NOTED OTHERWISE:

SNOW LOAD	PER DESIGN LOADING CRITERIA PER S00.01
LIVE LOAD	PER DESIGN LOADING CRITERIA
DEAD LOAD	15 PSF DEAD LOAD
WIND UPLIFT	10 PSF (NET)

THE JOIST MANUFACTURER SHALL COORDINATE LOCATIONS AND SUPPORT CONFIGURATIONS OF PLUMBING, MECHANICAL UNITS, DUCTS, AND/OR OTHER MISCELLANEOUS ITEMS WITH THE CONTRACTOR PRIOR TO JOIST FABRICATION. THE JOIST MANUFACTURER SHALL DESIGN JOISTS TO SUPPORT ALL LOADS ASSOCIATED WITH SUCH ITEMS. THE JOIST SHOP DRAWINGS SHALL INCLUDE ALL DESIGN LOADS AND APPROVED HANGER CONNECTION DETAILS TO JOISTS FOR SUPPORT OF HUNG MECHANICAL SYSTEM COMPONENTS

SUBMIT SHOP DRAWINGS AND DESIGN CALCULATIONS TO THE STRUCTURAL ENGINEER FOR REVIEW PRIOR TO FABRICATION. DESIGN SUBMITTALS SHALL BEAR THE STAMP AND SIGNATURE OF A REGISTERED PROFESSIONAL ENGINEER, STATE OF WASHINGTON.

ROOF I-JOIST HANGERS SHALL BE 'MIU' SERIES BY SIMPSON STRONG-TIE, UNLESS OTHERWISE NOTED.

FLOOR I-JOIST HANGERS SHALL BE 'MIT' SERIES BY SIMPSON STRONG-TIE, UNLESS OTHERWISE NOTED.

TIMBER CONNECTORS CALLED OUT BY LETTERS AND NUMBERS SHALL BE "STRONG-TIE" BY SIMPSON COMPANY, AS SPECIFIED IN THEIR LATEST CATALOG. ALTERNATE CONNECTORS CONFORMING WITH IBC SECTION 2303.5 & 2304.10.3., THAT MEET OR EXCEED THE SPECIFIED CONNECTORS' CAPACITY MAY BE USED SUBJECT TO REVIEW AND APPROVAL BY THE ENGINEER. A CURRENT ICC-ES REPORT AND A LIST STATING THE ITEM-FOR-ITEM SUBSTITUTION AND CAPACITY COMPARISONS MUST BE SUBMITTED TO THE STRUCTURAL ENGINEER FOR ANY PROPOSED SUBSTITUTES. THE CONTRACTOR SHALL BE RESPONSIBLE FOR ALL ENGINEERING COSTS RELATING TO REVIEW AND/OR RE-DESIGN TO ACCOMMODATE PROPOSED SUBSTITUTIONS. INSTALL NUMBER AND SIZE OF FASTENERS AS SPECIFIED BY MANUFACTURER. CONNECTORS SHALL BE INSTALLED IN ACCORDANCE WITH THE MANUFACTURER'S INSTRUCTIONS. WHERE CONNECTOR STRAPS CONNECT TWO MEMBERS, CENTER STRAP ON JOINT AND INSTALL NUMBER AND SIZE OF FASTENERS AS SPECIFIED BY MANUFACTURER, WITH EQUAL NUMBER AND SIZE OF FASTENERS IN EACH MEMBER. ALL BOLTS IN WOOD MEMBERS SHALL CONFORM TO ASTM A307. INSTALL WASHERS UNDER THE HEADS AND NUTS OF ALL BOLTS AND LAG SCREWS BEARING ON WOOD. ALL SHIMS SHALL BE SEASONED AND DRIED AND THE SAME GRADE (MINIMUM) AS MEMBERS CONNECTED. ALL TIMBER JOISTS AND MULTIPLE JOIST BEAMS SHALL BE CONNECTED TO FLUSH BEAMS WITH "HU" SERIES JOIST HANGERS, UNLESS OTHERWISE NOTED.

ALL TIMBER CONNECTORS IN CONTACT WITH PRESSURE-TREATED WOOD THAT USES PRESERVATIVE CHEMICALS SHALL BE MANUFACTURED FROM ZMAX STEEL BY SIMPSON (G185 STEEL PER ASTM A653), OR TYPE 304 OR 316 STAINLESS STEEL. ALTERNATIVELY, CONNECTORS CAN BE POST HOT DIP GALVANIZED PER ASTM A123 OR MECHANICALLY GALVANIZED PER ASTM B695, CLASS 55 OR GREATER. STAINLESS STEEL FASTENERS SHALL BE USED WITH STAINLESS STEEL CONNECTORS, AND HOT DIP GALVANIZED FASTENERS PER ASTM A153 SHALL BE USED WITH GALVANIZED CONNECTORS.

NAILING NOT SPECIFICALLY NOTED IN DRAWINGS SHALL BE AS SHOWN IN IBC TABLE 2304.10.2. NAILS SHALL COMPLY WITH ASTM F1667. MINIMUM NAIL DIMENSIONS SHALL BE AS FOLLOWS:

SIZE	DIAMETER	LENGTH
6d	0.113"	2"
8d	0.131"	2 1/2"
10d	0.148"	3"
12d	0.148"	3 1/4"
16d	0.162"	3 1/2"
20d	0.192"	4"

BOLTS SHALL CONFORM TO ASTM A307. LAG SCREWS SHALL CONFORM TO ASME B18.2.1. INSTALL WASHERS UNDER THE HEADS AND NUTS OF ALL BOLTS AND LAG SCREWS BEARING ON WOOD. INSTALLATION OF LAG SCREWS SHALL CONFORM TO 2018 NDS SECTION 12.1.4, AND INSTALLATION OF BOLTS SHALL CONFORM TO 2018 NDS SECTION 12.1.3. PRE-DRILL HOLES FOR LAG SCREWS TO AVOID SPLITTING.

ALL TIMBER FASTENERS IN CONTACT WITH PRESERVATIVE-TREATED OR FIRE-TREATED WOOD SHALL BE POST HOT DIP GALVANIZED PER ASTM A153.

RICE fergus MILLER
ARCHITECTURE INTERIORS PLANNING VIZLAB
275 FIFTH STREET, SUITE 100
BREMERTON, WA 98337
360-377-8773
RFMARCH.COM

Reid Middleton
728 134th Street SW, Suite 200
Everett, Washington 98204
Ph: 425.741.3800
www.reidmiddleton.com

© Copyright 2023 Reid Middleton, Inc.

STATE OF WASHINGTON 43107 PROFESSIONAL ENGINEER
10/12/23

STATION 57 ADDITION
GIG HARBOR FIRE AND MEDIC ONE
10521 CRESCENT VALLEY DR. NW
GIG HARBOR, WA 98332

PROJECT # 2022010.03
BID SET
ISSUE DATE JANUARY 8, 2024

REVISION SCHEDULE

AHJ APPROVAL STAMP

GENERAL STRUCTURAL NOTES

SHEET #
S00.03

DATE/ TIME PRINTED: 10/10/2023 11:53:06 AM
Autodesk Docs://Gig Harbor Fire Capital Facilities/2022010_00 GHFMO_S3_STRU_2022.rvt

SEE EARTHQUAKE DESIGN DATA SECTION OF THE GENERAL STRUCTURAL NOTES FOR SEISMIC-FORCE RESISTING-SYSTEMS. SEISMIC-FORCE-RESISTING SYSTEMS (INCLUDING DRAG STRUTS AND CHORDS) ARE SUBJECT TO SPECIAL INSPECTION IN ACCORDANCE WITH THE FOLLOWING SEISMIC AND NON-SEISMIC TABLES. STRUCTURAL SYSTEMS NOT PART OF THE SEISMIC-FORCE-RESISTING SYSTEM NEED ONLY BE INSPECTED IN ACCORDANCE WITH NON-SEISMIC TABLES. SEE THE 2018 IBC CHAPTER 17 FOR ADDITIONAL REQUIREMENTS.

STRUCTURAL SPECIAL INSPECTION

SPECIAL INSPECTION SHALL BE ACCORDANCE WITH THE FOLLOWING INFORMATION.

TASK - INDICATES WHETHER TO OBSERVE OR PERFORM (OR BOTH) THE INSPECTION TASK.
DOC - THE INSPECTOR SHALL PREPARE REPORTS INDICATING THAT THE WORK HAS BEEN PERFORMED IN ACCORDANCE WITH THE CONTRACT DOCUMENTS.
O - OBSERVE THESE FUNCTIONS ON A RANDOM, DAILY BASIS, OPERATIONS NEED NOT BE DELAYED PENDING INSPECTIONS. FREQUENCY OF OBSERVATIONS SHALL BE ADEQUATE TO CONFIRM THAT THE WORK HAS BEEN PERFORMED INACCORDANCE WITH THE APPLICABLE DOCUMENTS.
P - PERFORM, FOR EACH JOINT OR MEMBER PRIOR TO THE FINAL ACCEPTANCE OF THE ITEM.
QC - TASKS INDICATED AS "QC" SHALL BE EXECUTED BY THE FABRICATOR AND ERECTOR IN ACCORDANCE WITH AISC 360 CHAPTER N.
QA - TASKS INDICATED AS "QA" SHALL BE EXECUTED BY THE SPECIAL INSPECTOR IN ACCORDANCE WITH AISC 360 CHAPTER N.

REQUIRED VERIFICATION AND INSPECTION OF SOILS

VERIFICATION AND INSPECTION TASK	CONTINUOUS	PERIODIC	REFERENCED STANDARD	IBC REFERENCE
1. VERIFY MATERIALS BELOW SHALLOW FOUNDATIONS ARE ADEQUATE TO ACHIEVE THE DESIGN BEARING CAPACITY	-	X	-	1705.6
2. VERIFY EXCAVATIONS ARE EXTENDED TO PROPER DEPTH AND HAVE REACHED PROPER MATERIAL	-	X	-	1705.6
3. PERFORM CLASSIFICATION AND TESTING OF COMPACTED FILL MATERIALS	-	X	-	1705.6
4. VERIFY USE OF PROPER MATERIALS, DENSITIES AND LIFT THICKNESSES DURING PLACEMENT AND COMPACTION OF COMPACTED FILL	X	-	-	1705.6
5. PRIOR TO PLACEMENT OF COMPACTED FILL, INSPECT SUBGRADE AND VERIFY THAT SITE HAS BEEN PREPARED PROPERLY	-	X	-	1705.6

SPECIAL INSPECTION OF CONCRETE CONSTRUCTION

VERIFICATION AND INSPECTION	CONTINUOUS	PERIODIC	REFERENCED STANDARD [1]	IBC REFERENCE
1. INSPECT REINFORCEMENT	-	X	ACI 318: CH. 20, 25.2, 25.3, 26.6.1 - 26.6.3	-
2. REINFORCING BAR WELDING:				
a. VERIFY WELDABILITY OF REINFORCING BARS OTHER THAN ASTM A706	-	X	AWS D1.4 ACI 318: 26.6.4	-
b. INSPECT SINGLE-PASS FILLET WELDS, MAXIMUM 5/16"	-	X		
c. INSPECT ALL OTHER WELDS	X	-		
3. INSPECT ANCHORS CAST IN CONCRETE	-	X	ACI 318: 17.8.2	-
4. INSPECT ANCHORS POST-INSTALLED IN HARDENED CONCRETE MEMBERS [2]				
a. ADHESIVE ANCHORS INSTALLED IN HORIZONTALLY OR UPWARDLY INCLINED ORIENTATIONS TO RESIST SUSTAINED TENSION LOADS	X	-	ACI 318: 17.8.2	-
b. MECHANICAL ANCHORS AND ADHESIVE ANCHORS NOT DEFINED IN 4a	-	X	ACI 318: 17.8.2.4	-
5. VERIFY USE OF REQUIRED DESIGN MIX	-	X	ACI 318: CH. 19, 26.4.3, 26.4.4	1904.1, 1904.2,
6. PRIOR TO CONCRETE PLACEMENT, FABRICATE SPECIMENS FOR STRENGTH TESTS, PERFORM SLUMP AND AIR CONTENT TESTS, AND DETERMINE THE TEMPERATURE OF THE CONCRETE	X	-	ASTM C 172 ASTM C 31 ACI 318: 26.4, ACI 318:26.12, ASTM C 231, ASTM C 143, ASTM C 1064	-
7. INSPECT CONCRETE PLACEMENT FOR PROPER APPLICATION TECHNIQUES	X	-	ACI 318: 26.5	-
8. VERIFY MAINTENANCE OF SPECIFIED CURING TEMPERATURE AND TECHNIQUES	-	X	ACI 318: 26.5.3-26.5.5	-
9. INSPECT PRESTRESSED CONCRETE FOR:				
a. APPLICATION OF PRESTRESSING FORCES	X	-	ACI 318: 26.10	-
b. GROUTING OF BONDED PRESTRESSING TENDONS	X	-		
10. INSPECT ERECTION OF PRECAST CONCRETE MEMBERS	-	X	ACI 318: 26.8	-
11. VERIFY IN-SITU CONCRETE STRENGTH, PRIOR TO STRESSING OF TENDONS IN POST-TENSIONED CONCRETE AND PRIOR TO REMOVAL OF SHORES AND FORMS FROM BEAMS AND STRUCTURAL SLABS	-	X	ACI 318: 26.11.2	-
12. INSPECT FORMWORK FOR SHAPE, LOCATION AND DIMENSIONS OF THE CONCRETE MEMBER BEING FORMED	-	X	ACI 318: 26.11.1.2 [2]	-

[1] WHERE APPLICABLE, SEE ALSO IBC SECTION 1705.12, SPECIAL INSPECTIONS FOR SEISMIC RESISTANCE. SPECIFIC REQUIREMENTS FOR SPECIAL INSPECTION SHALL BE INCLUDED IN THE RESEARCH REPORT FOR THE ANCHOR ISSUED BY AN APPROVED SOURCE IN ACCORDANCE WITH 17.8.2 IN ACI 318, OR OTHER QUALIFICATION PROCEDURES. WHERE SPECIFIC REQUIREMENTS ARE NOT PROVIDED

[2] SPECIAL INSPECTION REQUIREMENTS SHALL BE SPECIFIED BY THE REGISTERED DESIGN PROFESSIONAL AND SHALL BE APPROVED BY THE BUILDING OFFICIAL PRIOR TO THE COMMENCEMENT OF WORK.

HIGH LOAD WOOD DIAPHRAGMS

VERIFICATION AND INSPECTION TASK	CONTINUOUS	PERIODIC	REFERENCED STANDARD	IBC REFERENCE
1. HIGH LOAD DIAPHRAGMS PER IBC SECTION 2306.2:				
a. CONFIRM SHEATHING IS OF THE GRADE AND THICKNESS AS SHOWN ON THE APPROVED BUILDING PLANS		X	AF AND PA SDPWS - 2015	1705.5
b. VERIFY NOMINAL SIZE OF FRAMING AT PANEL EDGES		X	AF AND PA SDPWS - 2015	1705.5
c. VERIFY NAIL OR STAPLE DIAMETER AND LENGTH		X	AF AND PA SDPWS - 2015	1705.5
d. VERIFY NUMBER OF FASTENER LINES, THE SPACING BETWEEN FASTENERS IN EACH LINE AND AT EDGE		X	AF AND PA SDPWS - 2015	1705.5

SEISMIC REQUIREMENTS FOR WOOD CONSTRUCTION

VERIFICATION AND INSPECTION TASK	CONTINUOUS	PERIODIC	REFERENCED STANDARD	IBC REFERENCE
1. FIELD GLUING OF SEISMIC ELEMENTS	X		AF AND PA SDPWS - 2015	1705.12.2
2. NAILING BOLTING, ANCHORING AND FASTENING OF WOOD SHEAR WALLS, WOOD DIAPHRAGM, COLLECTORS / DRAG STRUTS, BRACES, SHEAR PANELS AND HOLDOWNS		X	AF AND PA SDPWS - 2015	1705.12.2

NON-STRUCTURAL COMPONENTS SEISMIC REQUIREMENTS FOR NONSTRUCTURAL COMPONENTS

VERIFICATION AND INSPECTION TASK	CONTINUOUS	PERIODIC	REFERENCED STANDARD	IBC REFERENCE
1. DESIGNATED SEISMIC SYSTEM				
a. VERIFY THE LABEL, ANCHORAGE AND MOUNTING CONFORMS TO THE CERTIFICATE OF COMPLIANCE		X	ASCE 7 SECTION 13.2	1705.12.4
2. ARCHITECTURAL COMPONENTS				
a. ERECTION AND FASTENING OF b. EXTERIOR CLADDING [1, 2]		X	-	1705.12.5
b. ERECTION AND FASTENING OF INTERIOR AND EXTERIOR NON-BEARING WALLS [1, 2]		X	-	1705.12.5
c. ERECTION AND FASTENING OF INTERIOR AND EXTERIOR VENEER [1, 2]		X	-	1705.12.5
d. ANCHORAGE OF ACCESS FLOORS		X	-	1705.12.5.1
3. PLUMBING, MECHANICAL AND ELECTRICAL COMPONENTS				
a. ANCHORAGE OF ELECTRICAL EQUIPMENT FOR EMERGENCY AND STANDBY POWER SYSTEMS		X	-	1705.12.6
b. ANCHORAGE OF OTHER ELECTRICAL EQUIPMENT		X	-	1705.12.6
c. INSTALLATION AND ANCHORAGE OF PIPING SYSTEM DESIGNED TO CARRY HAZARDOUS MATERIALS AND THERE ASSOCIATED MECHANICAL UNITS		X	-	1705.12.6
d. INSTALLATION AND ANCHORAGE OF DUCTWORK DESIGNED TO CARRY HAZARDOUS MATERIALS		X	-	1705.12.6
e. INSTALLATION AND ANCHORAGE OF VIBRATION ISOLATION SYSTEM WHERE THE NOMINAL CLEARANCE BETWEEN THE EQUIPMENT SUPPORT FRAME AND RESTRAIN IS 1/4 INCH OR LESS		X	-	1705.12.6
4. STORAGE RACK				
a. ANCHORAGE OF STORAGE RACKS 8 FEET OR GREATER IN HEIGHT		X	-	1705.12.7

[1] SPECIAL INSPECTION IS NOT REQUIRED FOR EXTERIOR CLADDING, INTERIOR AND EXTERIOR NONBEARING WALLS AND INTERIOR AND EXTERIOR VENEER 30 FEET OR LESS IN HEIGHT ABOVE GRADE [OR A WALKING SURFACE].

[2] SPECIAL INSPECTION IS NOT REQUIRED FOR EXTERIOR CLADDING AND INTERIOR AND EXTERIOR VENEER WEIGHING 5 PSF OR LESS. SPECIAL INSPECTION IS NOT REQUIRED FOR INTERIOR NON-BEARING WALLS WEIGHING 15 PSF OR LESS.

TESTS

CONCRETE

a. VERIFICATION OF SPECIFIED CONCRETE COMPRESSIVE STRENGTH, f'_c, IN ACCORDANCE WITH ACI 318-14 SECTION 26.12.

b. VERIFICATION OF SPECIFIED AIR CONTENT, SLUMP, AND TEMPERATURE IN ACCORDANCE WITH ASTM C 172, ASTM C 231, ASTM C 143, ASTM C 1064.

c. VERIFICATION OF SPECIFIED SHOTCRETE COMPRESSIVE STRENGTH, f'_c, IN ACCORDANCE WITH IBC 1908.10 AT LEAST ONCE PER SHIFT, BUT NOT LESS THAN 50 CUBIC YARDS OF SHOTCRETE.

GEOTECHNICAL

a. VERIFICATION OF SPECIFIED FILL CLASSIFICATION MOISTURE CONTENT, AND DENSITY IN ACCORDANCE WITH THE GEOTECHNICAL REPORT.

RICE fergus MILLER
ARCHITECTURE INTERIORS PLANNING VIZLAB
275 FIFTH STREET, SUITE 100
BREMERTON, WA 98337
360-377-8773
RFMARCH.COM

Reid Middleton
728 134th Street SW, Suite 200
Everett, Washington 98204
Ph: 425.741.3800
www.reidmiddleton.com

© Copyright 2023 Reid Middleton, Inc.

STATE OF WASHINGTON COMBS, MICHAEL 43107 PROFESSIONAL ENGINEER
10/12/23

STATION 57 ADDITION
GIG HARBOR FIRE AND MEDIC ONE
10521 CRESCENT VALLEY DR. NW
GIG HARBOR, WA 98332

PROJECT # 2022010.03
BID SET
ISSUE DATE JANUARY 8, 2024
REVISION SCHEDULE

AHJ APPROVAL STAMP

SPECIAL INSPECTION SCHEDULES

SHEET #
S00.04

ABBREVIATIONS

&	AND
@	AT
AB	ANCHOR BOLT
ABV	ABOVE
ACI	AMERICAN CONCRETE INSTITUTE
ADDL	ADDITIONAL
ADJ	ADJACENT
AISC	AMERICAN INSTITUTE OF STEEL CONSTRUCTION
AISI	AMERICAN IRON AND STEEL INSTITUTE
ALT	ALTERNATE
ANCH	ANCHOR
APA	AMERICAN PLYWOOD ASSOCIATION
APPROX	APPROXIMATE
AR	ANCHOR ROD
ARCH	ARCHITECT, ARCHITECTURAL
ASCE	AMERICAN SOCIETY OF CIVIL ENGINEERS
ASTM	AMERICAN SOCIETY FOR TESTING AND MATERIALS
AWS	AMERICAN WELDING SOCIETY
B/	BOTTOM OF
BC	BOTTOM CHORD
BF	BRACED FRAME
BLDG	BUILDING
BLKG	BLOCKING
BM	BEAM
BMS	BEAMS
BOF	BOTTOM OF FOOTING
BOT	BOTTOM
B PL	BASE PLATE
BRG	BEARING
BTWN	BETWEEN
BU	BUILT-UP
C	CHANNEL
CANTIL	CANTILEVER
CDF	CONTROL DENSITY FILL
CG	CENTER OF GRAVITY
CIP	CAST-IN-PLACE
CJ	CONTROL JOINT
CJP, CP	COMPLETE JOINT PENETRATION
CL	CENTERLINE
CLDG	CLADDING
CLR	CLEAR
CMU	CONCRETE MASONRY UNIT
COL	COLUMN
COLS	COLUMNS
CONC	CONCRETE
CONN	CONNECT, CONNECTION
CONST	CONSTRUCTION
CONT	CONTINUE, CONTINUOUS
CONTR	CONTRACTOR
COORD	COORDINATE
CRSI	CONCRETE REINFORCING STEEL INSTITUTE
CSJ	CONSTRUCTION JOINT
CTR	CENTER, CENTERED
CU FT	CUBIC FEET
CU YD	CUBIC YARD
d	PENNYWEIGHT (NAILS)
(D)	DROPPED BEAM
D-B	DESIGN-BUILD
DBA	DEFORMED BAR ANCHOR
DBL	DOUBLE
DEG, °	DEGREE
DEMO	DEMOLISH, DEMOLITION
DF	DOUGLAS FIR
DIA	DIAMETER
DIAG	DIAGONAL
DIAPH	DIAPHRAGM
DIM	DIMENSION
DIST	DISTANCE
DL	DEAD LOAD
DN	DOWN
DO	DITTO
DP	DEEP
DWG	DRAWING
DWL	DOWEL
DWLS	DOWELS
(E), EXIST	EXISTING
EA	EACH
EE	EACH END
EF	EACH FACE
EJ	EXPANSION JOINT
EL	ELEVATION
ELEC	ELECTRICAL
ELEV	ELEVATOR
EMBED	EMBEDMENT
ENGR	ENGINEER
EQ	EQUAL
EQUIP	EQUIPMENT
EQUIV	EQUIVALENT
ES	EACH SIDE
ETC	ET CETERA
E-W	EAST-WEST
EW	EACH WAY
EXP	EXPANSION
EXT	EXTERIOR
EXT GR	EXTERIOR GRADE

FB	FLUSH BEAM
FD	FLOOR DRAIN
FDN	FOUNDATION
FEMA	FEDERAL EMERGENCY MANAGEMENT AGENCY
FF	FINISH FLOOR
FIN	FINISH
FLR	FLOOR
FLG	FLANGE
FOS	FACE OF STUD
FRT	FIRE RETARDANT TREATED
FS	FAR SIDE
FT, '	FEET
FTG	FOOTING
FTGS	FOOTINGS
GA	GAGE, GAUGE
GALV	GALVANIZED
GB, GR BM	GRADE BEAM
GC	GENERAL CONTRACTOR
GEN	GENERAL
GL	GLUE LAMINATED WOOD
GLB	GLUE LAMINATED BEAM
GRND	GROUND
GSN	GENERAL STRUCTURAL NOTES
GYP	GYPSUM
GWB	GYPSUM WALL BOARD
HD	HOLDOWN
HDR	HEADER
HGR	HANGER
HK	HOOK
HORIZ	HORIZONTAL
HPT	HIGH POINT
HSS	HOLLOW STRUCTURAL SECTION
HT	HEIGHT
IBC	INTERNATIONAL BUILDING CODE
ID	INSIDE DIAMETER
I.F.	INSIDE FACE
IJ	ISOLATION JOINT
IN, "	INCH
INCL	INCLUDE
INFO	INFORMATION
INT	INTERIOR
JST	JOIST
JSTS	JOISTS
JT	JOINT
K	KIP (1,000 LBS)
KSF	KIPS PER SQUARE FOOT
KSI	KIPS PER SQUARE INCH
L	ANGLE
LBS, #	POUNDS
LF	LINEAL FOOT
LL	LIVE LOAD
LLBB	LONG LEGS BACK TO BACK
LLH	LONG LEG HORIZONTAL
LLV	LONG LEG VERTICAL
LOC	LOCATION
LOCS	LOCATIONS
LONGIT	LONGITUDINAL
LPT	LOW POINT
LSH	LONG SLOTTED HOLE
LSL	LAMINATED STRAND LUMBER
LVL	LAMINATED VENEER LUMBER
MATL	MATERIAL
MAX	MAXIMUM
MECH	MECHANICAL
MEZZ	MEZZANINE
MF	MOMENT FRAME
MFR	MANUFACTURER
MIN	MINIMUM
MISC	MISCELLANEOUS
MPH	MILES PER HOUR
MTL	METAL
NF	NEAR FACE
NIC	NOT IN CONTRACT
NLG	NAILING
NOM	NOMINAL
NO., #	NUMBER
N-S	NORTH-SOUTH
NS	NEAR SIDE
NTS	NOT TO SCALE
OC	ON CENTER
OD	OUTSIDE DIAMETER
O.F.	OUTSIDE FACE
OPNG	OPENING
OPP	OPPOSITE
OSB	ORIENTED STRAND BOARD
OSH	OVERSIZED HOLE
OWJ	OPEN WEB JOIST

PCC	PRECAST CONCRETE
PCF	POUNDS PER CUBIC FOOT
PEN	PENETRATION
PERP	PERPENDICULAR
PL	PLATE
PLCS	PLACES
PLF	POUNDS PER LINEAR FOOT
PLS	PLATES
PLWD	PLYWOOD
PNL	PANEL
PP, PJP	PARTIAL JOINT PENETRATION
PRCST	PRECAST
PREFAB	PREFABRICATED
PSF	POUNDS PER SQUARE FOOT
PSI	POUNDS PER SQUARE INCH
PSL	PARALLEL STRAND LUMBER
P-T	PRESSURE TREATED
PT	POST-TENSIONED
PVC	POLYVINYL CHLORIDE
R	RADIUS
RB	RIM BOARD
RD	ROOF DRAIN
REBAR	REINFORCING STEEL BARS
REF	REFERENCE
REINF	REINFORCE, REINFORCING
REM	REMAINDER
REQD	REQUIRED
REV	REVISION
SCHED	SCHEDULE
SECT	SECTION
SHT	SHEET
SHTHG	SHEATHING
SIM	SIMILAR
SJI	STEEL JOIST INSTITUTE
SOG	SLAB ON GRADE
SPC	SPACE, SPACING
SPEC	SPECIFICATION
SQ	SQUARE
SST	STAINLESS STEEL
SSH	SHORT SLOTTED HOLE
STAG	STAGGER, STAGGERED
STD	STANDARD
STIFF	STIFFENER
STIR	STIRRUP
STL	STEEL
STRUCT	STRUCTURAL
SW	SHEAR WALL
SYMM	SYMMETRICAL
T/	TOP OF
T&B	TOP AND BOTTOM
T&G	TONGUE AND GROOVE
TBD	TO BE DETERMINED
TC	TOP CHORD
TEMP	TEMPERATURE
THK	THICK, THICKNESS
THP	TENDON HIGH POINT
THRU	THROUGH
TN	TOE NAIL
TOC	TOP OF CONCRETE
TOF	TOP OF FOOTING
TOS	TOP OF STEEL
TOW	TOP OF WALL
TR	THREADED ROD
TRANSV	TRANSVERSE
TYP	TYPICAL
UNO	UNLESS NOTED OTHERWISE
VERT	VERTICAL
W/	WITH
W	WIDTH
WD	WOOD
WF	WIDE FLANGE
WHS	WELDED HEADED STUD
W/O	WITHOUT
WP	WORKING POINT
WT	WEIGHT
WTS	WELDED THREADED STUD
WWR	WELDED WIRE REINFORCEMENT

SYMBOLS

GENERAL SYMBOLS

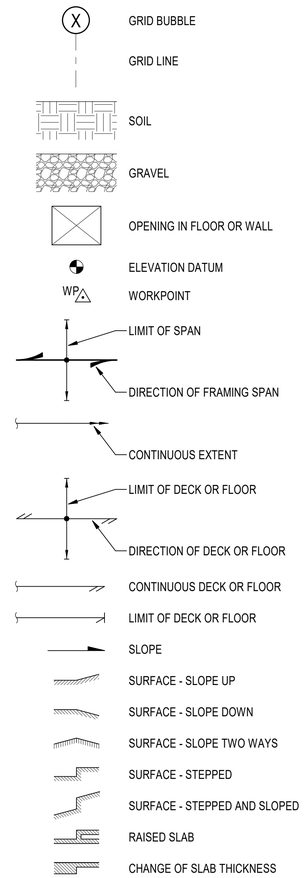

WOOD SYMBOLS

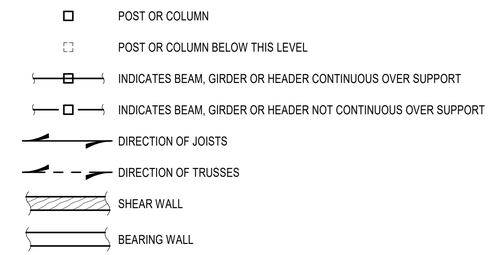

WOOD ANNOTATIONS

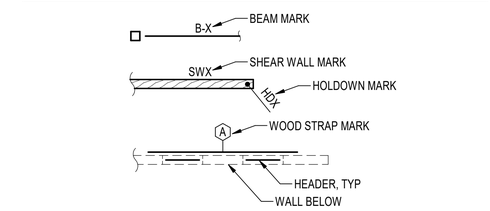

DETAIL IDENTIFIERS

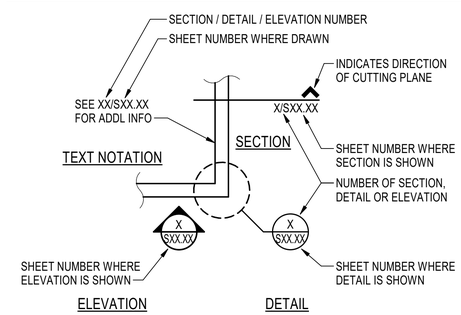

RICE fergus MILLER
ARCHITECTURE INTERIORS PLANNING VIZLAB
275 FIFTH STREET, SUITE 100
BREMERTON, WA 98337
360-377-8773
RFMARCH.COM

Reid Middleton
728 134th Street SW, Suite 200
Everett, Washington 98204
Ph: 425.741.3800
www.reidmiddleton.com

© Copyright 2023 Reid Middleton, Inc.

STATION 57 ADDITION
GIG HARBOR FIRE AND MEDIC ONE
10521 CRESCENT VALLEY DR. NW
GIG HARBOR, WA 98332

PROJECT #	2022010.03
BID SET	
ISSUE DATE	JANUARY 8, 2024

REVISION SCHEDULE

AHJ APPROVAL STAMP

STRUCTURAL ABBREVIATIONS AND SYMBOLS

SHEET #
S00.05

DATE/ TIME PRINTED: 10/10/2023 11:53:07 AM
Autodesk Docs://Gig Harbor Fire Capital Facilities/2022010_03 GHFMO_S3_STRU_2022.rvt

LEGEND

- HDX — HOLDOWN PER SCHEDULE OF 12/S50.61
- WOOD POST PER PLAN, TYPICAL
- (X) — STUD WALL PER SCHEDULE THIS SHEET
- STRUCTURAL WALL THIS LEVEL, SEE NOTES 9 AND 14
- SWX — PLYWOOD OR OSB SHEATHED SHEAR WALL THIS LEVEL PER SCHEDULE 12/S50.61, SEE NOTES 5, 9, 11 AND 14
- 2SWX — 2-SIDED PLYWOOD OR OSB SHEATHED SHEAR WALL THIS LEVEL PER SCHEDULE12/S50.61, SEE NOTES 4, 7, 8, 9, AND 11
- [H] [L] — FOOTING ELEVATION STEP [H] HIGH AND [L] LOW

FOUNDATION AND FIRST FLOOR FRAMING PLAN NOTES:

1. SLAB-ON-GRADE SHALL BE 4" THICK CONCRETE REINFORCED WITH #4 @ 16" EACH WAY UNLESS NOTED OTHERWISE. PROVIDE VAPOR BARRIER PER SPECIFICATIONS BELOW SLAB OVER FREE DRAINING FILL PER THE GEOTECHNICAL REPORT. PROVIDE CONTROL JOINTS EVERY 144 SF MAX. LAP REINFORCING PER 12/S50.01. WHERE CONCRETE SLAB IS TO BE DEMOLISHED, RECAST AND DOWEL 4" THICK SLAB REINFORCED WITH #4 @ 16" OC EW TO EXISTING SLAB PER DETAIL 7/S50.02. DOWEL NEW SLAB TO EXISTING PER DETAIL 7/S50.02.
2. PROVIDE CONSTRUCTION / CONTROL JOINTS IN SLABS ON GRADE TO DIVIDE SLAB INTO RECTANGULAR AREAS 144 SQUARE FEET OR LESS. AREAS SHALL BE APPROXIMATELY SQUARE AND HAVE NO ACUTE ANGLES. JOINT LOCATIONS MUST BE APPROVED BY THE ARCHITECT. SEE 9/S50.01.
3. TOPS OF ALL FOOTINGS SHOWN IN THIS PLAN SHALL BE AT ELEVATION -1'-6", UNLESS NOTED OTHERWISE. OVER EXCAVATE PER THE OWNER-APPOINTED GEOTECHNICAL ENGINEER WHERE REQUIRED AND PLACE SUITABLE COMPACTED FILL AS DIRECTED BY OWNER APPOINTED GEOTECHNICAL ENGINEER. CONTRACTOR SHALL COORDINATE WITH FINAL SITE GRADES AND MAINTAIN MINIMUM DEPTH OF FOOTINGS SHOWN ON THE DRAWINGS.
4. SEE 12/S50.61 FOR SHEAR WALL SCHEDULE AND SHEAR WALL FRAMING REQUIREMENTS. SHEAR WALL CORNERS AND INTERSECTIONS SHALL BE FRAMED AND NAILED PER 3/S50.62, UNLESS NOTED OTHERWISE. SEE 12/S50.65 FOR HOLDOWN SCHEDULE AND FRAMING REQUIREMENTS.
5. SEE S50.01 AND S50.02 FOR CONCRETE TYPICAL DETAILS.
6. SEE ARCHITECTURAL DRAWINGS FOR SLAB DEPRESSION AND SLOPE REQUIREMENTS. SEE 6/S50.01.
7. EXTERIOR STUD WALLS SHALL BE 2x8 @ 16" OC UNLESS NOTED OTHERWISE. SEE PLAN AND WALL SCHEDULE THIS SHEET WHERE EXTERIOR WALL HEIGHT > 16'-0". INTERIOR STUD WALLS SHALL BE 2x STUDS @ 16" OC, UNLESS NOTED OTHERWISE. SEE PLAN AND WALL SCHEDULE THIS SHEET WHERE INTERIOR WALL HEIGHT > 16'-0". SEE ARCHITECTURAL FOR WALL TYPES. SEE 12/S50.61 FOR SPECIAL STUD REQUIREMENTS AT HEAVILY NAILED SHEAR WALLS. SEE S50.62 FOR TYPICAL WALL FRAMING DETAILS AND ALLOWABLE PENETRATIONS THRU WALL STUDS AND PLATES.
8. POSTS OR JAMB STUDS SUPPORTING BEAMS ABOVE SHALL BE (2) STUDS, UNO.
9. AT PLYWOOD SHEAR WALLS, CONTRACTOR SHALL EXTEND SHEATHING TO ACHIEVE FULL COVERAGE OF ENTIRE WALL TO AVOID CONFLICTS BETWEEN VARYING PLYWOOD AND GWB THICKNESS.
10. SEE ARCHITECTURAL / MECHANICAL / ELECTRICAL / CIVIL / UTILITIES DRAWINGS FOR UNDER SLAB PIPING. COORDINATE FOUNDATION DEPTHS AND PIPING IN ACCORDANCE WITH 10/S50.01.
11. FRAME OPENINGS IN STRUCTURAL WALLS PER 12/S50.63, UNLESS NOTED OTHERWISE. HEADERS IN EXTERIOR WALLS SHALL BE (4) 2x8 AND DROPPED BELOW STUD WALL TOP PLATE PER 7/S50.62, UNLESS NOTED OTHERWISE. HEADERS IN INTERIOR WALLS SHALL BE (3) 2x8 AND DROPPED BELOW STUD WALL TOP PLATE, UNLESS NOTED OTHERWISE.

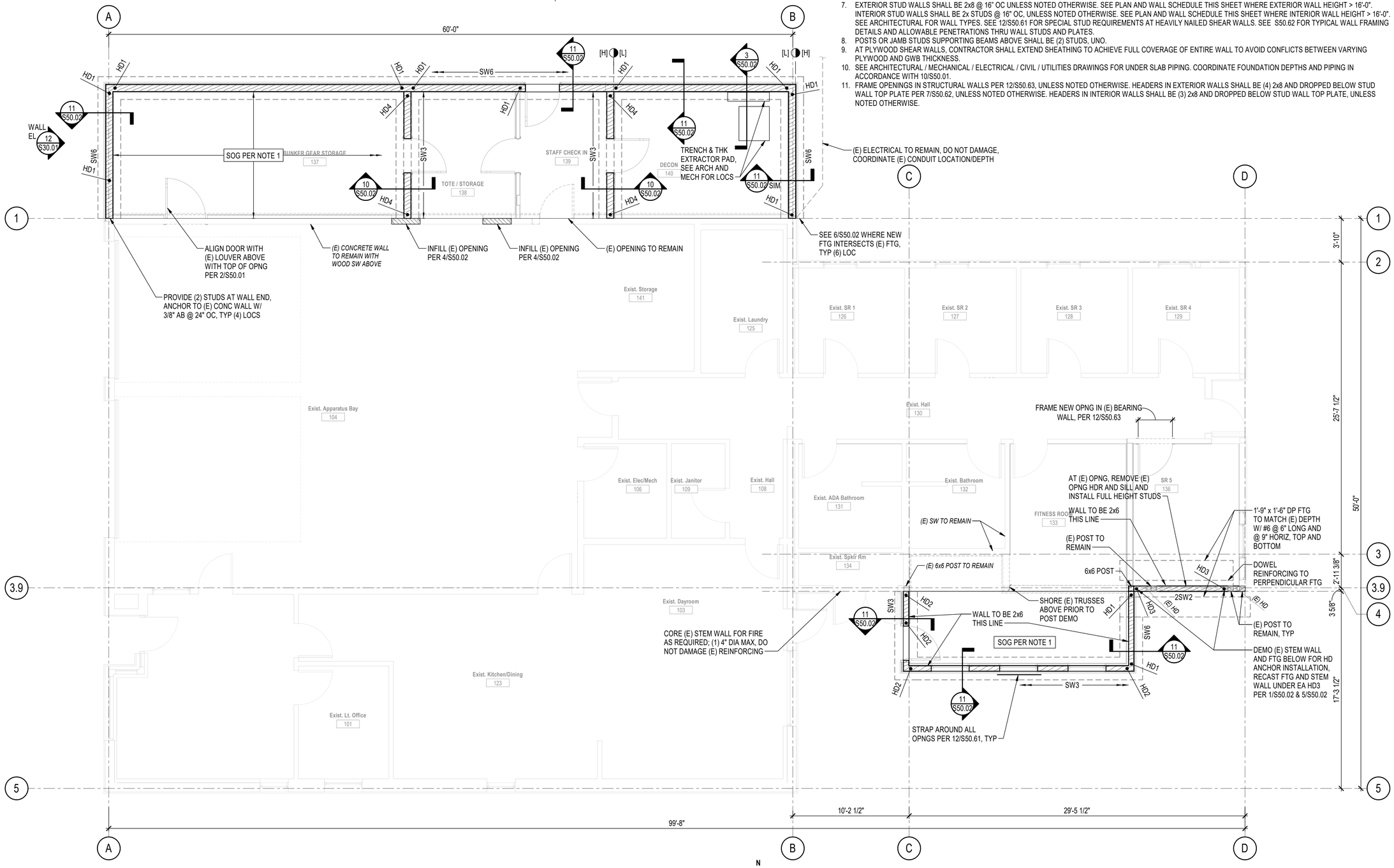

FOUNDATION AND FIRST FLOOR PLAN
1/4" = 1'-0"

SCALE: 1/4" = 1'-0"

RICE fergus MILLER
ARCHITECTURE INTERIORS PLANNING VIZLAB
275 FIFTH STREET, SUITE 100
BREMERTON, WA 98337
360-377-8773
RFMARCH.COM

Reid Middleton
728 134th Street SW, Suite 200
Everett, Washington 98204
Ph: 425.741.3800
www.reidmiddleton.com

© Copyright 2023 Reid Middleton, Inc.

STATE OF WASHINGTON — COLIN MICHAEL MILLER — 43107 — PROFESSIONAL ENGINEER — 10/12/23

STATION 57 ADDITION
GIG HARBOR FIRE AND MEDIC ONE
10521 CRESCENT VALLEY DR. NW
GIG HARBOR, WA 98332

PROJECT #	2022010.03
BID SET	
ISSUE DATE	JANUARY 8, 2024

REVISION SCHEDULE

1	BUILDING PERMIT REVIEW	7/5/2023

AHJ APPROVAL STAMP

FOUNDATION AND FIRST FLOOR PLAN

SHEET #
S22.01

DATE/ TIME PRINTED: 10/10/2023 11:53:07 AM
Autodesk Docs://Gig Harbor Fire Capital Facilities/2022010_03 GHFRMD_S3_STRU_2022.rvt

LEGEND

- STRUCTURAL WALL THIS LEVEL, SEE NOTES 9 AND 14
- SWX — PLYWOOD OR OSB SHEATHED SHEAR WALL THIS LEVEL PER SCHEDULE 12/S50.61, SEE NOTES 5, 9, 11 AND 14
- 2SWX — 2-SIDED PLYWOOD OR OSB SHEATHED SHEAR WALL THIS LEVEL PER SCHEDULE12/S50.61, SEE NOTES 5, 9, 11 AND 14
- STRUCTURAL WALL BELOW THIS LEVEL
- SPAN DIRECTION OF FRAMING MEMBERS
- [H] , [L] — RELATIVE LOCATION OF FRAMING MEMBER OF DETAIL CUT, [H] HIGH ; [L] LOW

LOW ROOF FRAMING PLAN NOTES:

1. ROOF SHEATHING SHALL BE 5/8" PLYWOOD (PANEL SPAN RATING 40/20). PROVIDE 2x FLAT BLOCKING AT ALL UNFRAMED PANEL EDGES, 3x FLAT BLOCKING WHERE ROOF FRAMING IS EXPOSED TO VIEW (BLOCKED DIAPHRAGMS). NAIL SHEATHING AT ALL PANEL EDGES, DIAPHRAGM BOUNDARIES, AND EXTERIOR SHEAR WALLS BELOW WITH 10d @ 4" OC. NAIL SHEATHING AT ALL STRUTS, BLOCKING, STRUT BLOCKING AND INTERIOR SHEAR WALLS BELOW WITH 10d @ 3" OC STAGGERED. NAIL SHEATHING TO ALL INTERMEDIATE FRAMING WITH 10d @ 12" OC. SEE 3/S50.62 FOR STAGGERED SHEATHING LAYOUT.
2. FRAME OPENINGS IN STRUCTURAL WALLS PER 12/S50.63, UNLESS NOTED OTHERWISE. HEADERS IN EXTERIOR WALLS SHALL BE (4) 2x8 AND DROPPED BELOW STUD WALL TOP PLATE PER 7/S50.62, UNLESS NOTED OTHERWISE. HEADERS IN INTERIOR WALLS SHALL BE (3) 2x8 AND DROPPED BELOW STUD WALL TOP PLATE, UNLESS NOTED OTHERWISE.

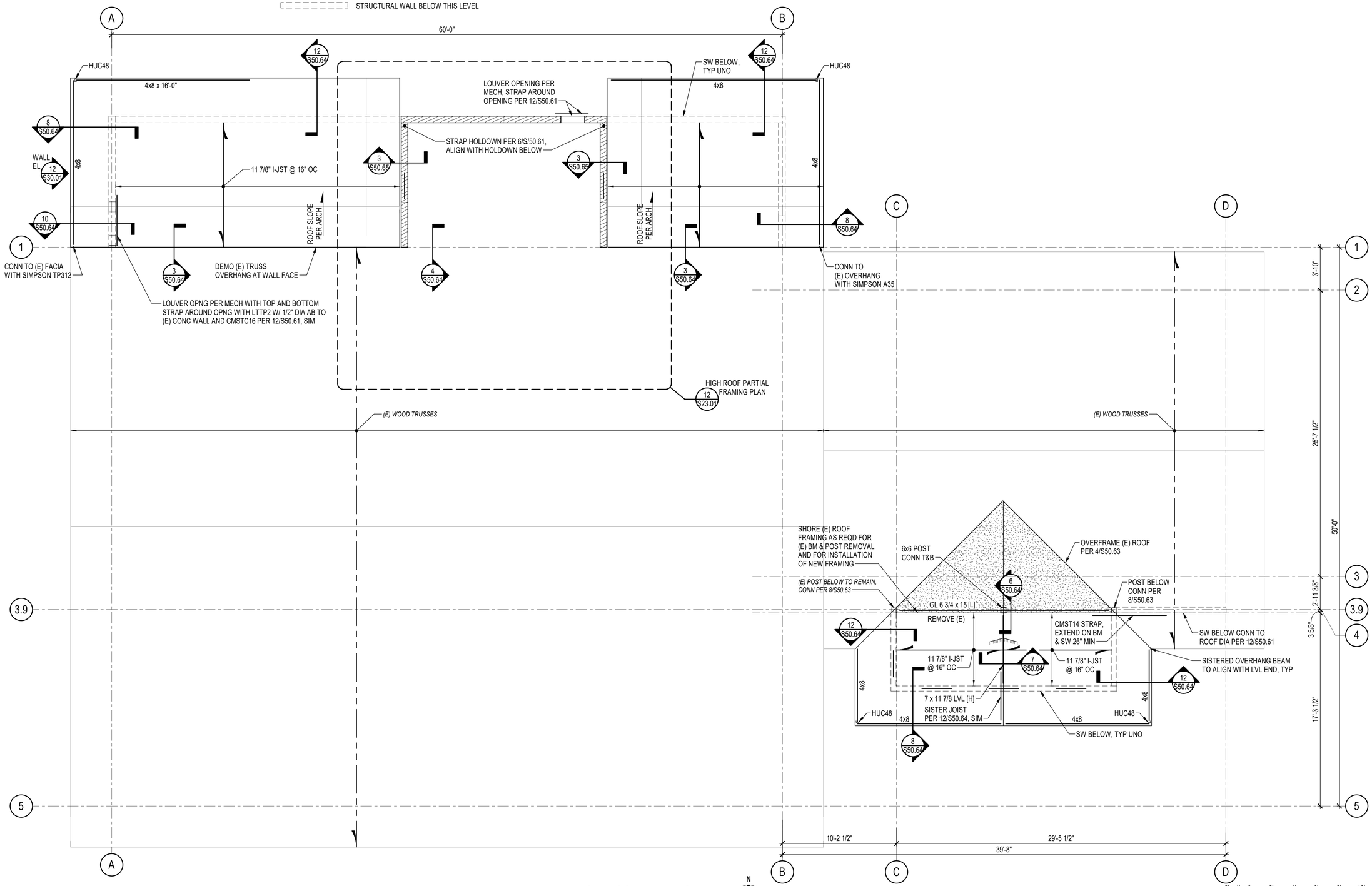

LOW ROOF FRAMING PLAN

1/4" = 1'-0"

SCALE: 1/4" = 1'-0"

RICE fergus MILLER
ARCHITECTURE INTERIORS PLANNING VIZLAB
275 FIFTH STREET, SUITE 100
BREMERTON, WA 98337
360-377-8773
RFMARCH.COM

Reid Middleton
728 134th Street SW, Suite 200
Everett, Washington 98204
Ph: 425.741.3800
www.reidmiddleton.com

© Copyright 2023 Reid Middleton, Inc.

STATE OF WASHINGTON — 43107 — PROFESSIONAL ENGINEER — 10/12/23

STATION 57 ADDITION
GIG HARBOR FIRE AND MEDIC ONE
10521 CRESCENT VALLEY DR. NW
GIG HARBOR, WA 98332

PROJECT #	2022010.03
BID SET	
ISSUE DATE	JANUARY 8, 2024

REVISION SCHEDULE

1	BUILDING PERMIT REVIEW	7/5/2023

AHJ APPROVAL STAMP

LOW ROOF FRAMING PLAN

SHEET #
S22.02

DATE/ TIME PRINTED: 10/10/2023 11:53:07 AM
Autodesk Docs://Gig Harbor Fire Capital Facilities/2022010_03 GHFMO_S3_STRU_2022.rvt

HIGH ROOF FRAMING PLAN NOTES:

1. ROOF SHEATHING SHALL BE 5/8" PLYWOOD (PANEL SPAN RATING 40/20). PROVIDE 2x FLAT BLOCKING AT ALL UNFRAMED PANEL EDGES, 3x FLAT BLOCKING WHERE ROOF FRAMING IS EXPOSED TO VIEW (BLOCKED DIAPHRAGMS). NAIL SHEATHING AT ALL PANEL EDGES, DIAPHRAGM BOUNDARIES, AND EXTERIOR SHEAR WALLS BELOW WITH 10d @ 4" OC. NAIL SHEATHING AT ALL STRUTS, BLOCKING, STRUT BLOCKING AND INTERIOR SHEAR WALLS BELOW WITH 10d @ 3" OC STAGGERED. NAIL SHEATHING TO ALL INTERMEDIATE FRAMING WITH 10d @ 12" OC. SEE 3/S50.62 FOR STAGGERED SHEATHING LAYOUT.

2. FRAME OPENINGS IN STRUCTURAL WALLS PER 12/S50.63, UNLESS NOTED OTHERWISE. HEADERS IN EXTERIOR WALLS SHALL BE (4) 2x8 AND DROPPED BELOW STUD WALL TOP PLATE PER 7/S50.62, UNLESS NOTED OTHERWISE. HEADERS IN INTERIOR WALLS SHALL BE (3) 2x8 AND DROPPED BELOW STUD WALL TOP PLATE, UNLESS NOTED OTHERWISE.

LEGEND

STRUCTURAL WALL BELOW THIS LEVEL

SPAN DIRECTION OF FRAMING MEMBERS

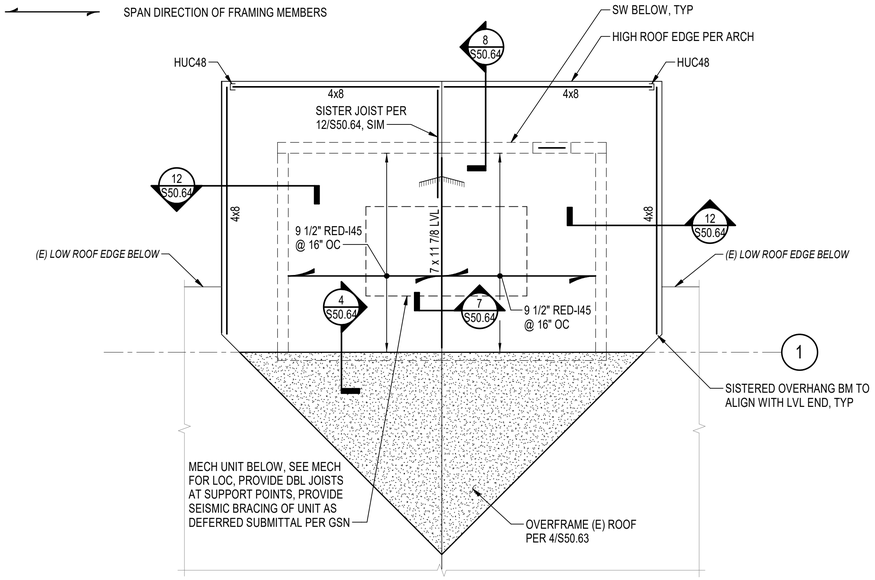

HIGH ROOF PARTIAL FRAMING PLAN 12
1/4" = 1'-0"

RICE fergus MILLER
ARCHITECTURE INTERIORS PLANNING VIZLAB
275 FIFTH STREET, SUITE 100
BREMERTON, WA 98337
360-377-8773
RFMARCH.COM

Reid Middleton
728 134th Street SW, Suite 200
Everett, Washington 98204
Ph: 425.741.3800
www.reidmiddleton.com

© Copyright 2023 Reid Middleton, Inc.

STATE OF WASHINGTON
COLLIN MICHAEL SMITH
43107
PROFESSIONAL ENGINEER
10/12/23

STATION 57 ADDITION
GIG HARBOR FIRE AND MEDIC ONE
10521 CRESCENT VALLEY DR. NW
GIG HARBOR, WA 98332

PROJECT #	2022010.03
BID SET	
ISSUE DATE	JANUARY 8, 2024

REVISION SCHEDULE

1	BUILDING PERMIT REVIEW	7/5/2023

AHJ APPROVAL STAMP

PARTIAL FRAMING
PLAN AND DETAILS

SHEET #
S23.01

DATE/ TIME PRINTED: 10/10/2023 11:53:08 AM
Autodesk Docs://Gig Harbor Fire Capital Facilities/2022010_03 GHFRMO_S3_STRU_2022.rvt

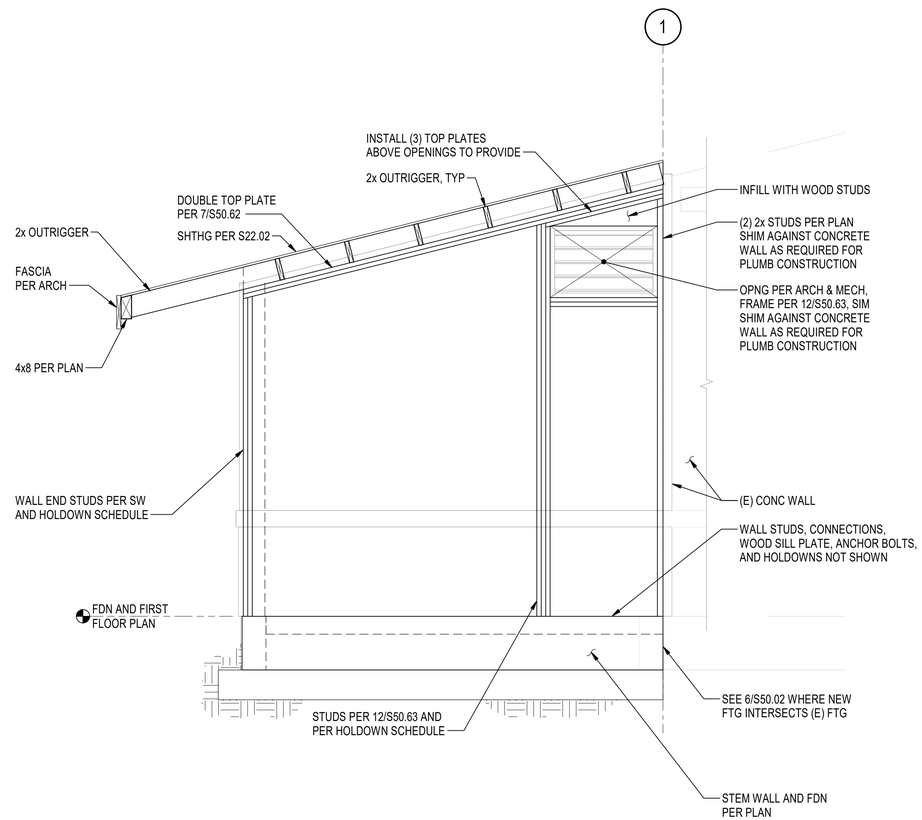

WALL ELEVATION 12
1/2" = 1'-0"

RICE fergus MILLER
ARCHITECTURE INTERIORS PLANNING VIZLAB
275 FIFTH STREET, SUITE 100
BREMERTON, WA 98337
360-377-8773
RFMARCH.COM

Reid Middleton
728 134th Street SW, Suite 200
Everett, Washington 98204
Ph: 425.741.3800
www.reidmiddleton.com
© Copyright 2023 Reid Middleton, Inc.

STATE OF WASHINGTON
CONRAD MICHAEL MILLER
43107
PROFESSIONAL ENGINEER
10/12/23

STATION 57 ADDITION
GIG HARBOR FIRE AND MEDIC ONE
10521 CRESCENT VALLEY DR. NW
GIG HARBOR, WA 98332

PROJECT #	2022010.03
BID SET	
ISSUE DATE	JANUARY 8, 2024

REVISION SCHEDULE

AHJ APPROVAL STAMP

WALL ELEVATION

SHEET #
S30.01

DATE/ TIME PRINTED: 10/10/2023 11:53:08 AM
Autodesk Docs://Gig Harbor Fire Capital Facilities/2022010_03 GHFRMO_S3_STRU_2022.rvt

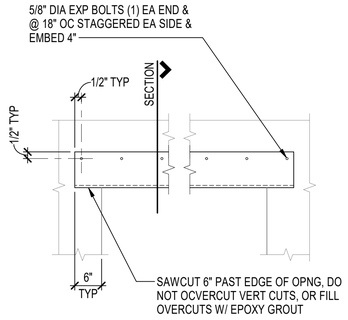

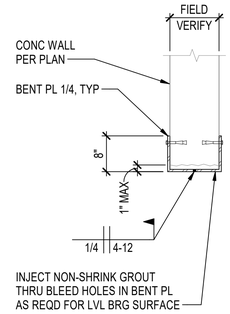

SECTION

STEEL HEADER ABOVE OPENING 2
NTS

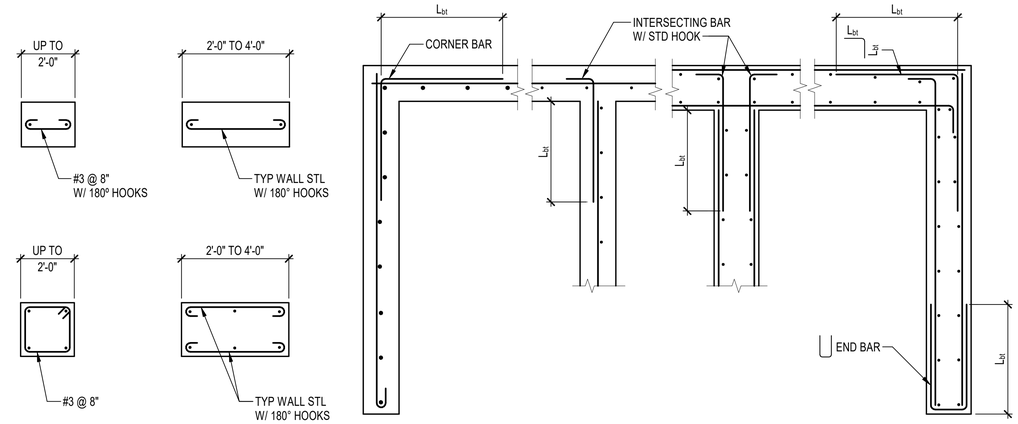

TYPICAL CONCRETE WALL PLAN DETAILS 4
NTS

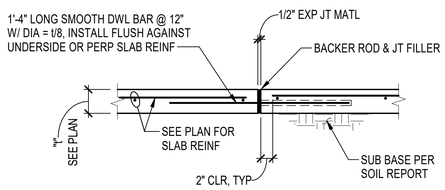

EXPANSION JOINT

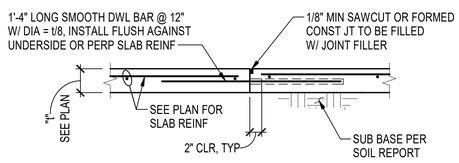

CONSTRUCTION JOINT

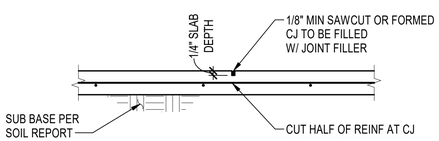

CONTROL JOINT

NOTES:

1. CONSTRUCTION JOINT MAY BE USED AT ANY CONTROL JOINT SHOWN ON PLANS AT CONTRACTORS OPTION.
2. REFER TO PLANS FOR SLAB THICKNESS AND REINFORCING.
3. CONTROL JOINTS TO BE SPACED AT 20'-0" ON CENTER MAXIMUM, EACH WAY. RATIO OF DISTANCE BETWEEN CONTROL JOINTS IN EACH DIRECTION FOR A SLAB PANEL SHALL NOT EXCEED 1.5. CONSTRUCTION JOINTS PER THIS DETAIL SHALL BE CONSIDERED AS CONTROL JOINTS FOR CONTROL JOINT SPACING REQUIREMENTS.

TYPICAL SLAB ON GRADE JOINT DETAILS 9
NTS

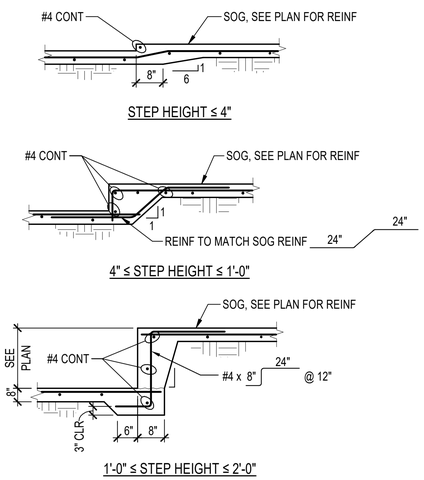

TYPICAL SLAB ON GRADE STEP DETAILS 6
NTS

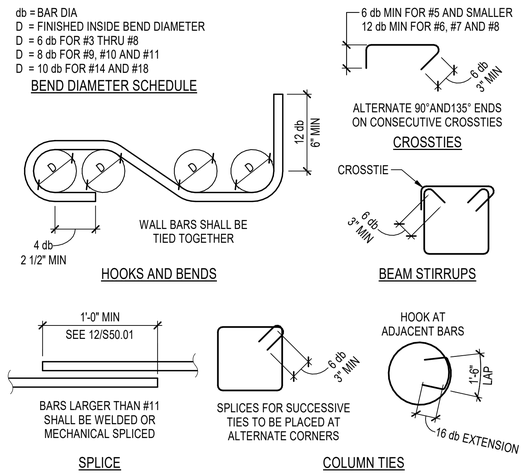

TYPICAL REINFORCING BAR BEND AND LAP DETAILS 7
NTS

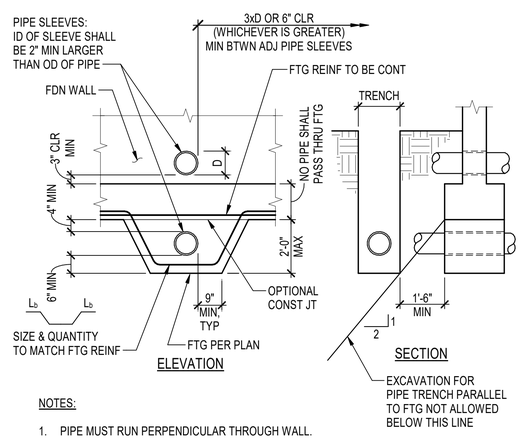

NOTES:

1. PIPE MUST RUN PERPENDICULAR THROUGH WALL.
2. MAXIMUM SLEEVE DIAMETER EQUAL TO 8".

TYPICAL PIPE ENCASEMENTAT FOOTING 10
NTS

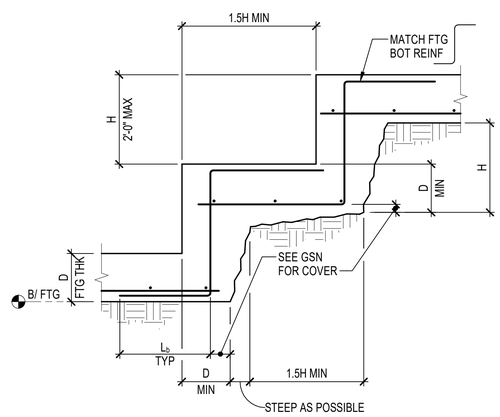

TYPICAL STEPPED FOOTING DETAIL 11
NTS

(I) MINIMUM STRAIGHT DEVELOPMENT LENGTH (L_d)

f'c = 4,000 to 5,000 PSI

BAR SIZE	TOP BARS	OTHER BARS
# 3	19"	15"
# 4	25"	19"
# 5	31"	24"
# 6	37"	29"
# 7	54"	42"
# 8	62"	48"
# 9	70"	54"
# 10	79"	61"
# 11	87"	67"

"TOP BARS" ARE HORIZONTAL BARS WITH MORE THAN 12" DEPTH OF CONCRETE CAST BELOW THEM.

IF CLEAR CONCRETE COVER IS LESS THAN 1x THE DIAMETER OF THE BAR OR THE CENTER-TO-CENTER SPACING IS LESS THAN (3) BAR DIAMETERS, THEN VALUES SHALL BE INCREASED BY 50%.

(II) MINIMUM LAP SPLICE LENGTHS (L_s) (CLASS B)

f'c = 4,000 to 5,000 PSI

BAR SIZE	TOP BARS	OTHER BARS
# 3	25"	19"
# 4	33"	25"
# 5	40"	31"
# 6	48"	37"
# 7	71"	54"
# 8	81"	62"
# 9	91"	70"
# 10	103"	79"
# 11	114"	87"

"TOP BARS" ARE HORIZONTAL BARS WITH MORE THAN 12" DEPTH OF CONCRETE CAST BELOW THEM.

IF CLEAR CONCRETE COVER IS LESS THAN 1x THE DIAMETER OF THE BAR OR THE CENTER-TO-CENTER SPACING IS LESS THAN (3) BAR DIAMETERS, THEN VALUES SHALL BE INCREASED BY 50%.

(III) MINIMUM EMBEDMENT LENGTHS (L_{dh}) FOR STANDARD END HOOKS

BAR SIZE	f'c = 4,000 to 5,000 PSI
# 3	6"
# 4	7"
# 5	9"
# 6	10"
# 7	12"
# 8	14"
# 9	15"
# 10	17"
# 11	19"

NOTES:

1. SIDE COVER MUST BE EQUAL TO OR GREATER THAN 2 1/2".
2. END COVER FOR 90 DEGREE HOOKS MUST BE EQUAL TO OR GREATER THAN 2".

DEVELOPMENT AND SPLICE LENGTH TABLES 12
NTS

RICE fergus MILLER
ARCHITECTURE INTERIORS PLANNING VIZLAB
275 FIFTH STREET, SUITE 100
BREMERTON, WA 98337
360-377-8773
RFMARCH.COM

Reid Middleton
728 134th Street SW, Suite 200
Everett, Washington 98204
Ph: 425.741.3800
www.reidmiddleton.com

© Copyright 2023 Reid Middleton, Inc.

STATE OF WASHINGTON
COMBS, MICHAEL J.
43107
PROFESSIONAL ENGINEER
10/12/23

STATION 57 ADDITION
GIG HARBOR FIRE AND MEDIC ONE
10521 CRESCENT VALLEY DR. NW
GIG HARBOR, WA 98332

PROJECT #	2022010.03
BID SET	
ISSUE DATE	JANUARY 8, 2024

REVISION SCHEDULE

1	BUILDING PERMIT REVIEW	7/5/2023

AHJ APPROVAL STAMP

TYPICAL CONCRETE DETAILS

SHEET #
S50.01

DATE/ TIME PRINTED: 10/10/2023 11:53:08 AM
Autodesk Docs://Gig Harbor Fire Capital Facilities/2022010_03 GHFHO_S3_STRU_2022.rvt

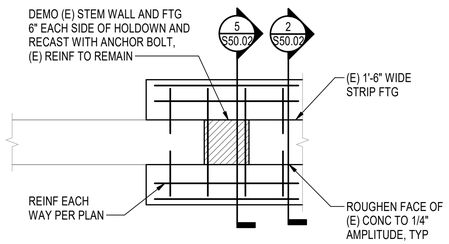

PLAN

EXPANDED FOOTING 1
NTS

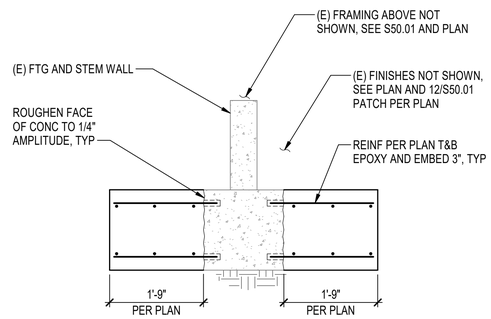

SECTION

EXPANDED FOOTING SECTION 2
3/4" = 1'-0"

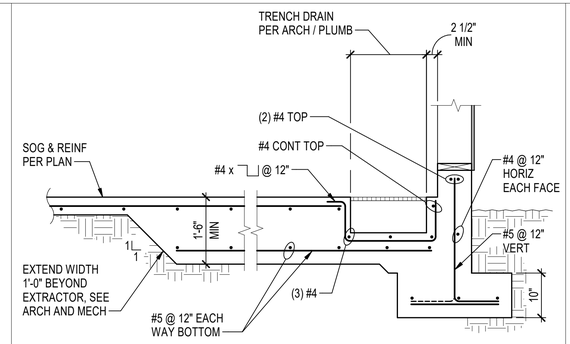

NOTE:

1. SEE 1/S50.02 FOR ADDITIONAL INFORMATION.

EXTRACTOR PAD AND TRENCH 3
3/4" = 1'-0"

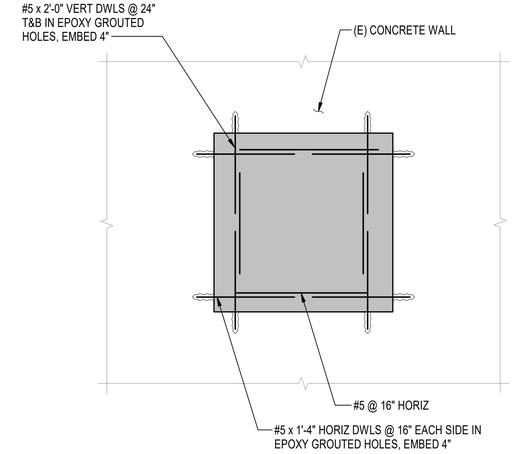

TYPICAL CONCRETE INFILL 4
NTS

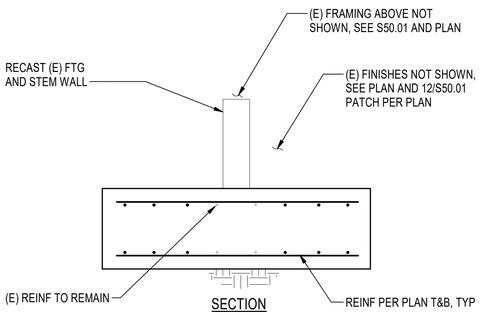

SECTION

RECAST FOOTING SECTION 5
NTS

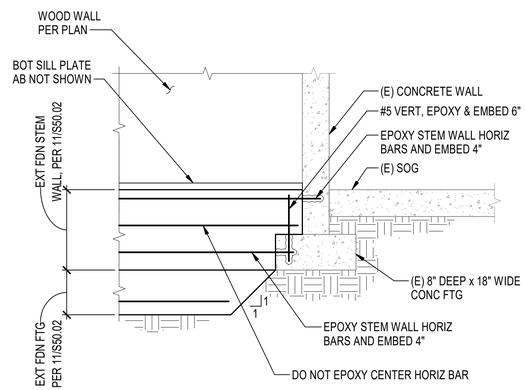

FOOTING SECTION AT EXISTING FOOTING 6
3/4" = 1'-0"

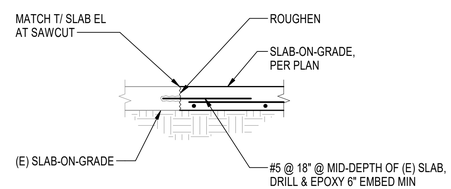

SOG TO EXISTING CONNECTION 7
NTS

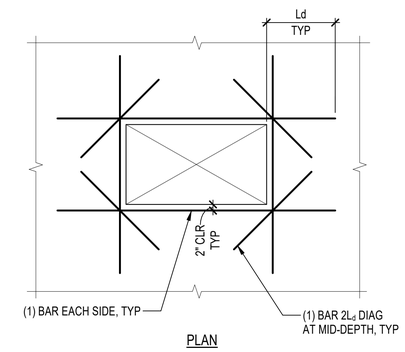

PLAN

NOTES:

1. BAR SIZE TO MATCH SLAB REINFORCING.
2. IF TWO LAYERS OF STEEL IN SLAB, PROVIDE OPENING REINFORCEMENT FOR EACH LAYER.

TYPICAL REINFORCING AT SLAB ON GRADE OPENING 8
NTS

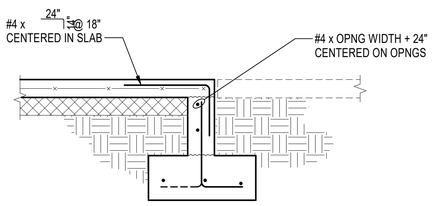

NOTE:

1. FOR CALL OUTS IN COMMON SEE 11/S50.02.

EXTERIOR FOUNDATION AT DOORWAY 9
3/4" = 1'-0"

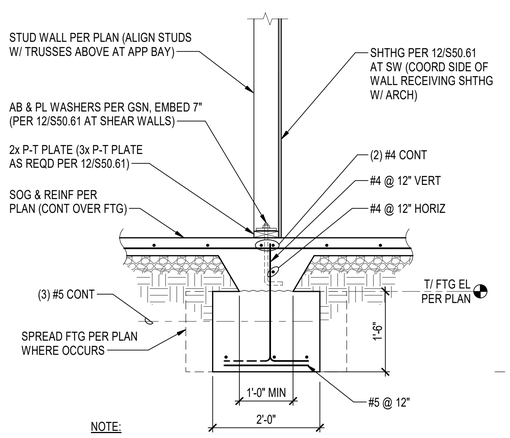

NOTE:

1. SEE DETAILS ON S50.65 WHERE HOLDOWNS OCCUR.

TYPICAL INTERIOR FOOTING 10
3/4" = 1'-0"

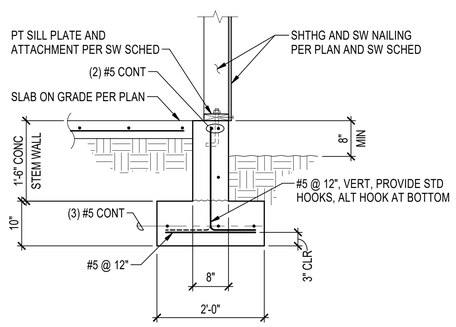

NOTE:

1. AT SIMILAR CONDITION EXTEND STEM WALL 6" ABOVE SLAB TO ALIGN WITH HEIGHT PER 3/S50.02.

EXTERIOR FOUNDATION SECTION 11
3/4" = 1'-0"

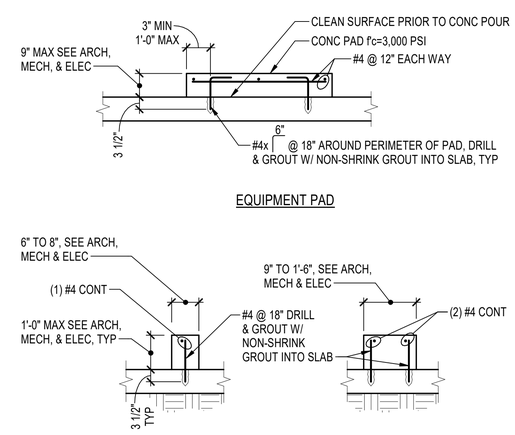

TYPICAL CURB AND PAD ON CONCRETE SLAB DETAILS 12
NTS

RICE fergus MILLER
ARCHITECTURE INTERIORS PLANNING VIZLAB
275 FIFTH STREET, SUITE 100
BREMERTON, WA 98337
360-377-8773
RFMARCH.COM

Reid Middleton
728 134th Street SW, Suite 200
Everett, Washington 98204
Ph: 425.741.3800
www.reidmiddleton.com

© Copyright 2023 Reid Middleton, Inc.

STATE OF WASHINGTON 43107 PROFESSIONAL ENGINEER 10/12/23

STATION 57 ADDITION
GIG HARBOR FIRE AND MEDIC ONE
10521 CRESCENT VALLEY DR. NW
GIG HARBOR, WA 98332

PROJECT #	2022010.03
BID SET	
ISSUE DATE	JANUARY 8, 2024

REVISION SCHEDULE

1	BUILDING PERMIT REVIEW	7/5/2023

AHJ APPROVAL STAMP

TYPICAL CONCRETE DETAILS

SHEET #
S50.02

DATE/ TIME PRINTED: 10/10/2023 11:53:09 AM
Autodesk Docs://Gig Harbor Fire Capital Facilities/2022010_03 GHFHO_S3_STRU_2022.rvt

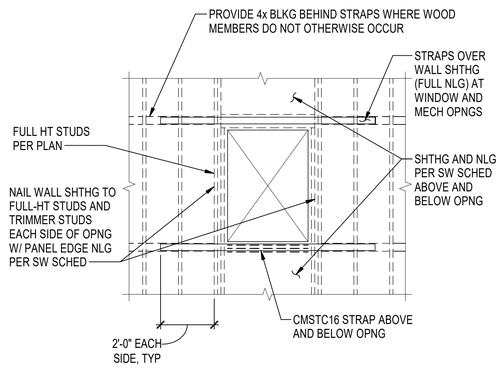

STRAPS AT WINDOWS / DUCT OPENINGS IN SW 2
NTS

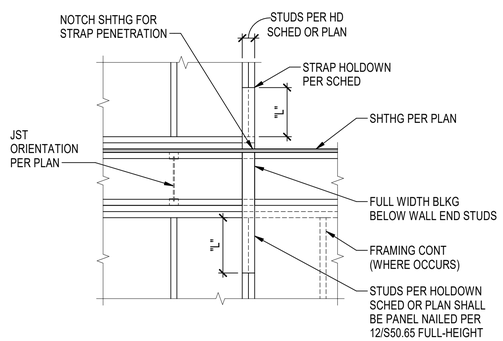

STRAP LENGTH SCHEDULE		
STRAP TYPE	"L"	NAIL SPACING
CMSTC16E	4'-0"	3" OC, EACH ROW

FLOOR-TO-FLOOR STRAP HOLDOWN 6
NTS

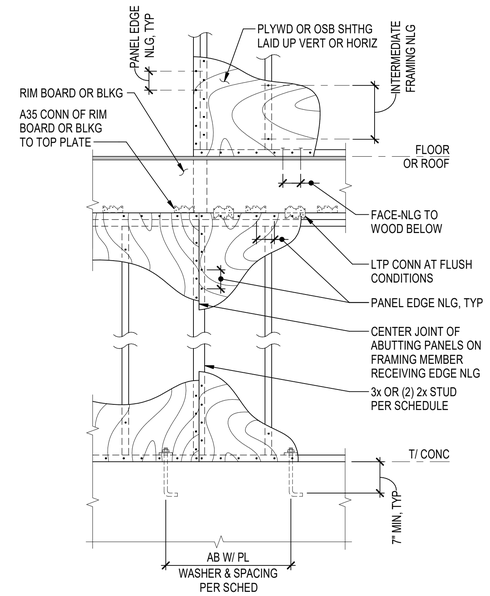

TYPICAL SHEAR WALL NAILING CONVENTION

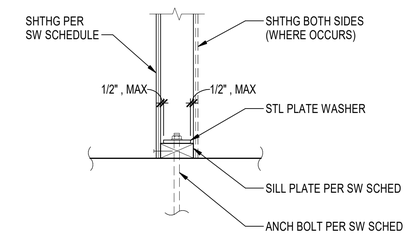

SHEAR WALL SILL PLATE
ANCHOR BOLT PLATE WASHER

SHEAR WALL SCHEDULE										
WALL MARK	WALL SHEATHING	PANEL EDGE NAILING	FRAMING AT ADJ PANEL EDGES	(2) 2x FRAMING NAILING	BOTTOM PLATE NAILING	ALTERNATE BOTTOM PLATE CONNECTION TO FRAMING BELOW	TOP PLATE CONNECTION A35 OR LTP4	FDN STILL PLATE	ANCHOR BOLTING OF SILL PLATE TO CONCRETE	ALLOWABLE SHEAR (PLF)
	NOTES #1, #10	NOTES #2, #8	NOTES #4, #5	NOTES #5, #8	NOTES #3, #8, #9	NOTES #3, #9	NOTES #7, #8	NOTE #9	NOTE #6	NOTE #8
SW6	15/32" (1) SIDE	0.148 x 2 1/2" @ 6" OC	2x	-	0.148 x 3 1/2" @ 6" OC	1/4" x 5" SDS SCREWS @ 18" OC	@ 2'-3" OC	2x	5/8" DIA @ 48" OC or 3/4" DIA @ 48" OC	310
SW4	15/32" (1) SIDE	0.148 x 2 1/2" @ 4" OC	2x	-	0.148 x 3 1/2" @ 4 1/2" OC	1/4" x 5" SDS SCREWS @ 14" OC	@ 1'-8" OC	2x	5/8" DIA @ 30" OC or 3/4" DIA @ 40" OC	460
SW3	15/32" (1) SIDE	0.148 x 2 1/2" 3" OC	3x ((2) 2x)	0.148 x 3 1/2" @ 3 1/2" OC	0.148 x 3 1/2" @ 3 1/2" OC	1/4" x 5" SDS SCREWS @ 10" OC	@ 1'-2" OC	2x	5/8" DIA @ 24" OC or 3/4" DIA @ 32" OC	600
2SW2	15/32" (2) SIDES	0.148 x 2 1/2" @ 2" OC	3x ((2) 2x)	(2) ROWS 1/4" x 5" SDS SCREWS @ 8" OC	(2) ROWS 1/4" x 5" SDS SCREWS @ 8" OC	-	@ 10" OC EACH SIDE	2x (3x)	5/8" DIA @ 9" OC or 3/4" DIA @ 12" OC (5/8" DIA @ 12" OC or 3/4" DIA @ 16" OC)	1,540
2SW3	15/32" (2) SIDES	0.148 x 2 1/2" @ 3" OC	3x ((2) 2x)	(2) ROWS 0.148 x 3 1/2" @ 3 1/2" OC	(2) ROWS 0.148 x 3 1/2" @ 3 1/2" OC	1/4" x 5" SDS SCREWS @ 6" OC	@ 14" OC EACH SIDE	2x (3x)	5/8" DIA @ 12" OC or 3/4" DIA @ 16" OC (5/8" DIA @ 16" OC or 3/4" DIA @ 20" OC)	1,200
2SW4	15/32" (2) SIDES	0.148 x 2 1/2" @ 4" OC	3x ((2) 2x)	(2) ROWS 0.148 x 3 1/2" @ 4" OC	(2) ROWS 0.148 x 3 1/2" @ 4" OC	1/4" x 5" SDS SCREWS @ 7" OC	@ 16" OC EACH SIDE	2x (3x)	5/8" DIA @ 16" OC or 3/4" DIA @ 20" OC (5/8" DIA @ 18" OC or 3/4" DIA @ 24" OC)	920

SHEAR WALL NOTES:

1. WALL SHEATHING SHALL BE APA RATED ORIENTED STRAND BOARD (OSB) OR CDX PLYWOOD, EXPOSURE 1, AND HAVE A PANEL SPAN RATING OF 24/16. WALL PANELS MAY BE INSTALLED VERTICALLY OR HORIZONTALLY.
2. THE SPECIFIED PANEL EDGE NAILING IS REQUIRED AT ALL PANEL EDGES AND ENDS. INSTALL 2x SOLID BLOCKING AT ALL UNFRAMED PANEL EDGES AND ENDS WITH MINIMUM 2x SOLID BLOCKING, UNO (SEE NOTES 4 AND 5 FOR 3x REQUIREMENTS). SPACE NAILS MINIMUM 3/8" FROM EDGES AND ENDS OF WALL PANELS, WALL STUDS, TOP AND BOTTOM PLATES, AND BLOCKING. NAIL INTERMEDIATE FRAMING MEMBERS WITH PANEL NAILING @ 12" OC. WHERE SHEATHING IS 7/16" THICK AND STUD SPACING IS 24" OC, NAIL SHEATHING TO INTERMEDIATE FRAMING WITH PANEL NAILS @ 6" OC.
3. BOTTOM PLATE NAILING SHALL PENETRATE INTO RIMBOARD OR BLOCKING BELOW, WHERE OCCURS. SINGLE ROWS OF NAILING SHALL BE CENTERED IN THE BLOCKING OR RIMBOARD BELOW. WHERE MULTIPLE ROWS OF NAILING IS REQURIED, OFFSET ROWS AT LEAST 1 1/2" AND STAGGER NAILS AND MAINTAIN 1/2" MINIMUM FROM EDGES. WHERE MULTIPLE ROWS OF NAILS ARE SPECIFIED, BLOCKING OR RIM BOARD BELOW SHALL BE 3 1/2" WIDE MINIMUM.
4. INSTALL 3x WALL STUDS AT ADJOINING VERTICAL PANEL EDGES AND 3x SOLID BLOCKING AT ADJOINING HORIZONTAL EDGES. STAGGER PANEL EDGE NAILING 1/2" AND MAINTAIN SUFFICIENT EDGE DISTANCE TO AVOID SPLITTING OF WOOD.
5. (2) 2x WALL STUDS AND BLOCKING ARE PERMITTED TO BE SUBSTITUTED FOR RESPECTIVE 3x FRAMING AT ADJOINING PANEL EDGES WHERE SPECIFIED. FASTEN (2) 2x FRAMING TOGETHER WITH 0.148" DIA x 3 1/4" NAILS AT THE SPECIFIED SPACING. WHERE MULTIPLE ROWS OF NAILS ARE SPECIFIED, SPACE ROWS 1 1/2" APART AND STAGGER. MAINTAIN SUFFICIENT EDGE DISTANCE TO AVOID SPLITTING OF WOOD.
6. AT SILL PLATES, EMBED ANCHOR RODS A MINIMUM OF 7" INTO CONCRETE, SEE DETAILS. INSTALL STEEL PLATE WASHER BETWEEN THE SILL PLATE AND NUT AT EACH ANCHOR ROD. LOCATE PLATE WASHER SUCH THAT EDGE OF PLATE WASHER IS 1/2" MAX AWAY FROM EACH EDGE OF SILL PLATE RECEIVING PANEL EDGE NAILING FROM SHEAR WALL SHEATHING, SEE ENLARGED DETAIL TO THE LEFT. HOLE IN PLATE WASHER IS PERMITTED TO BE DIAGONALLY SLOTTED WITH A MAXIMUM WIDTH 3/16" > BOLT DIAMETER AND MAXIMUM LENGTH OF 1 3/4", PROVIDED STANDARD CUT WASHER INSTALLED BETWEEN PLATE WASHER AND NUT.
7. TOP PLATE CONNECTORS IDENTIFIED AS "A35", AND "LTP4" ARE MANUFACTURED BY SIMPSON STRONG-TIE. WHERE CONNECTORS ARE SPECIFIED ON BOTH SIDES, CONNECTORS SHALL BE STAGGERED TO AVOID INTERFERENCE. SEE GENERAL STRUCTURAL NOTES FOR ADDITIONAL INFORMATION AND FOR ADDITIONAL REQUIREMENTS WHEN CONNECTORS ARE IN CONTACT WITH PRESERVATIVE TREATED OR FIRE RETARDANT TREATED LUMBER.
8. SHEAR WALL CAPACITIES ARE BASED ON THE USE OF GALVANIZED BOX OR POWER DRIVEN NAILS OF THE DIAMETER AND LENGTH INDICATED. NAILS PENETRATING INTO PRESSURE-TREATED OR FIRE RETARDANT TREATED LUMBER SHALL BE HOT-DIPPED GALVANIZED NAILS PER GENERAL STRUCTURAL NOTES.
9. SDS SCREWS ARE MANUFACTURED BY SIMPSON STRONG-TIE WHERE MULTIPLE ROWS OF SDS SCREWS ARE SPECIFIED, SPACE ROWS 1 1/2" APART AND STAGGER. MAINTAIN SUFFICIENT EDGE DISTANCE.
10. WHERE WALL SHEATHING PANELS ARE APPLIED ON EACH SIDE OF WALL, PANEL JOINTS SHALL BE OFFSET TO FALL ON DIFFERENT FRAMING MEMBERS. WHERE WALL SHEATHING PANELS ARE APPLIED ON EACH SIDE OF WALL, PANEL JOINTS SHALL BE OFFSET TO FALL ON DIFFERENT FRAMING MEMBERS.

SHEAR WALL SCHEDULE 12
NTS

RICE fergus MILLER
ARCHITECTURE INTERIORS PLANNING VIZLAB
275 FIFTH STREET, SUITE 100
BREMERTON, WA 98337
360-377-8773
RFMARCH.COM

Reid Middleton
728 134th Street SW, Suite 200
Everett, Washington 98204
Ph: 425.741.3800
www.reidmiddleton.com
© Copyright 2023 Reid Middleton, Inc.

STATE OF WASHINGTON 43107 PROFESSIONAL ENGINEER 10/12/23

STATION 57 ADDITION
GIG HARBOR FIRE AND MEDIC ONE
10521 CRESCENT VALLEY DR. NW
GIG HARBOR, WA 98332

PROJECT # 2022010.03
BID SET
ISSUE DATE JANUARY 8, 2024
REVISION SCHEDULE

AHJ APPROVAL STAMP

TYPICAL WOOD DETAILS

SHEET #
S50.61

DATE/ TIME PRINTED: 10/10/2023 11:53:09 AM
Autodesk Docs://Gig Harbor Fire Capital Facilities/2022010_03 GHFMO_S3_STRU_2022.rvt

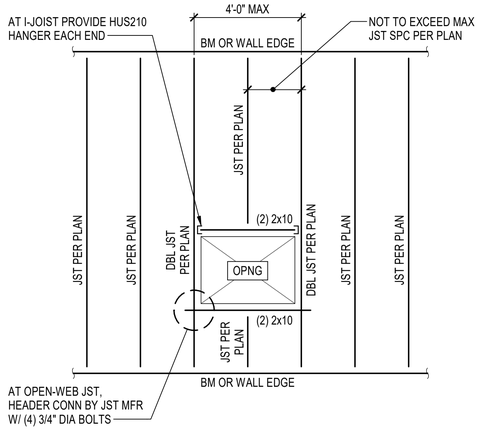

NOTE:

1. SEE 2/S50.62 FOR ADDITIONAL INFORMATION NOT SHOWN.

FRAMING AT LARGE FLOOR / ROOF OPENINGS 1
NTS

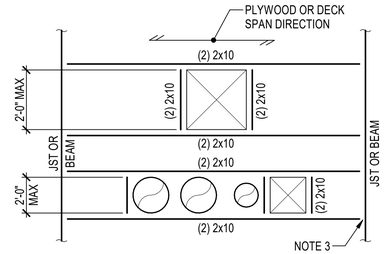

NOTES:

1. ATTACH PLYWOOD OR DECK TO FRAMING WITH DIAPHRAGM BOUNDARY NAILING .
2. LARGER OPENINGS MUST BE COORDINATED WITH ARCHITECT AND ENGINEER.
3. CONTRACTOR AND JOIST MANUFACTURER TO COORDINATE OPENINGS. JOIST MANUFACTURER TO PROVIDE WEB FILLER AND / OR TRANSFER BLOCKS.

REINFORCING AT MISCELLANEOUS ROOF OPENINGS IN THE WOOD FRAMING 2
NTS

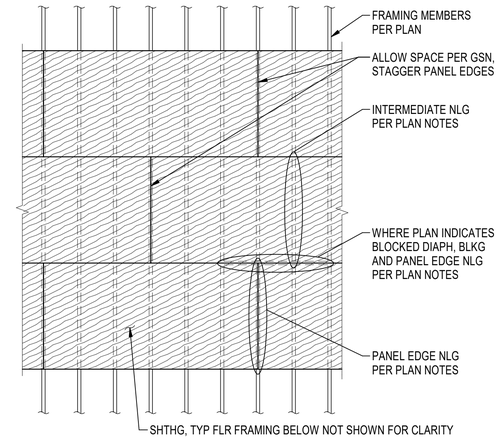

TYPICAL FLOOR AND ROOF SHEATHING PLAN 3
NTS

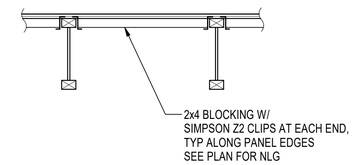

NOTE:

1. TYPICAL AT ALL PANEL EDGES WHERE BLOCKING IS REQUIRED, SEE PLAN FOR LOCATIONS.

PANEL EDGE BLOCKING DETAIL 4
NTS

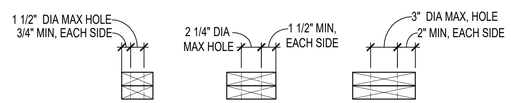

NO REINFORCING REQUIRED

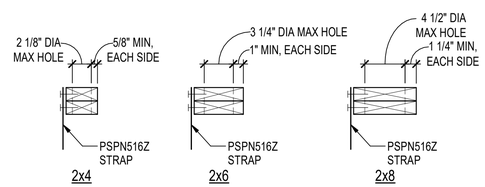

STRAP REINFORCING

NOTE:

1. AT BOTTOM PLATES, FOLLOW GUIDELINES SHOWN, EXCEPT USE CS16 x 2'-0" STRAP.

ALLOWABLE HOLES THRU TOP PLATES 6
NTS

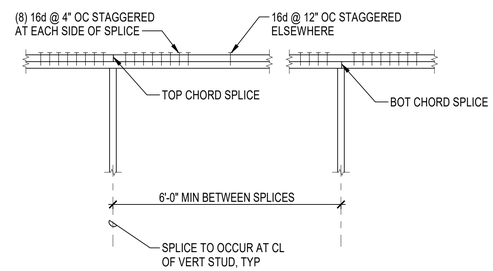

TOP PLATE SPLICE DETAIL 7
NTS

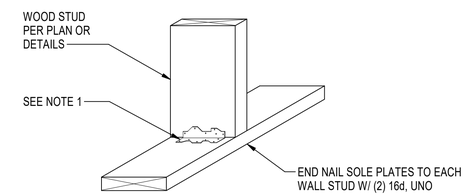

NOTE:

1. ALL STUDS GREATER THAN 14'-0" IN HEIGHT AND SUBJECT TO WIND LOADING SHALL BE ATTACHED TO TOP AND BOTTOM PLATES WITH A35, UNO.

WOOD STUD TO WALL PLATE 8
NTS

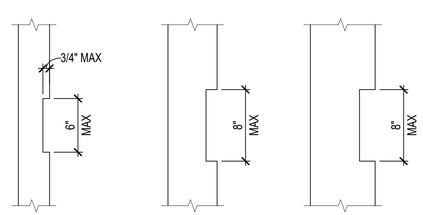

2x4 STUDS (3x4 SIMILAR) | 2x6 STUDS (3x6 SIMILAR) | 2x8 STUDS (3x8 SIMILAR)

NOTE:

1. NOTCHES SHALL NOT OCCUR IN MORE THAN (2) SUCCESSIVE STUDS.

ALLOWABLE NOTCHES IN STUDS 9
NTS

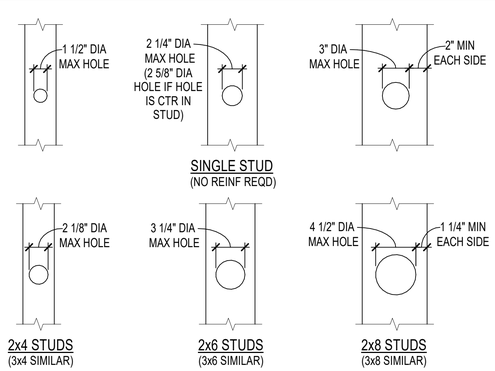

SINGLE STUD (NO REINF REQD)

2x4 STUDS (3x4 SIMILAR) | 2x6 STUDS (3x6 SIMILAR) | 2x8 STUDS (3x8 SIMILAR)

DOUBLE STUDS (NO MORE THAN TWO SUCCESSIVE STUDS MAY BE BORED)

NOTE:

1. MULTIPLE HOLES IN STUDS SHALL BE SPACED TO PROVIDE (3) DIAMETERS CLEARANCE MINIMUM BETWEEN HOLES BASED ON LARGER HOLE SIZE.

HOLES ALLOWED THRU STUDS 10
NTS

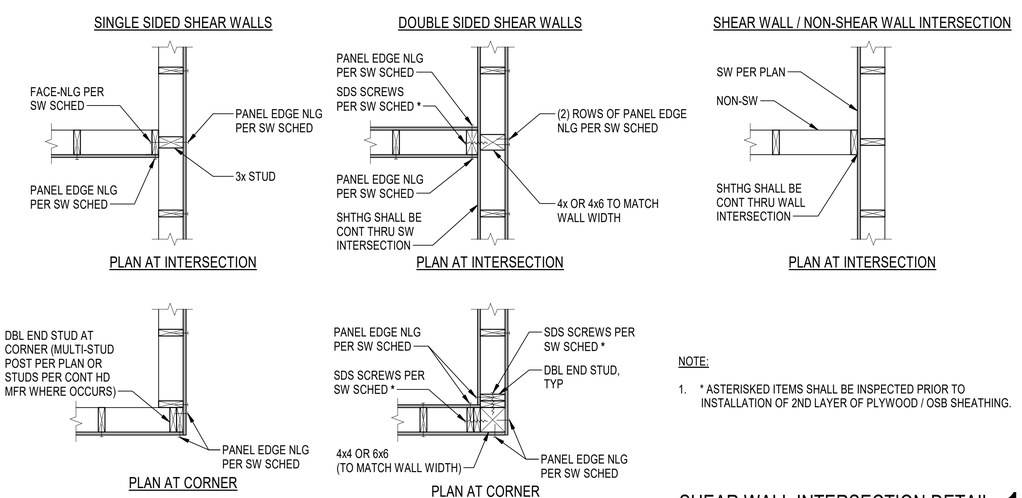

NOTE:

1. * ASTERISKED ITEMS SHALL BE INSPECTED PRIOR TO INSTALLATION OF 2ND LAYER OF PLYWOOD / OSB SHEATHING.

SHEAR WALL INTERSECTION DETAIL 12
NTS

RICE fergus MILLER
ARCHITECTURE INTERIORS PLANNING VIZLAB
275 FIFTH STREET, SUITE 100
BREMERTON, WA 98337
360-377-8773
RFMARCH.COM

Reid Middleton
728 134th Street SW, Suite 200
Everett, Washington 98204
Ph: 425.741.3800
www.reidmiddleton.com

© Copyright 2023 Reid Middleton, Inc.

STATE OF WASHINGTON COMMISSION 43107 PROFESSIONAL ENGINEER 10/12/23

STATION 57 ADDITION
GIG HARBOR FIRE AND MEDIC ONE
10521 CRESCENT VALLEY DR. NW
GIG HARBOR, WA 98332

PROJECT #	2022010.03
BID SET	
ISSUE DATE	JANUARY 8, 2024

REVISION SCHEDULE

AHJ APPROVAL STAMP

TYPICAL WOOD DETAILS

SHEET #
S50.62

DATE/ TIME PRINTED: 10/10/2023 11:53:09 AM
Autodesk Docs://Gig Harbor Fire Capital Facilities/2022010_03 GHFMO_53_STRU_2022.rvt

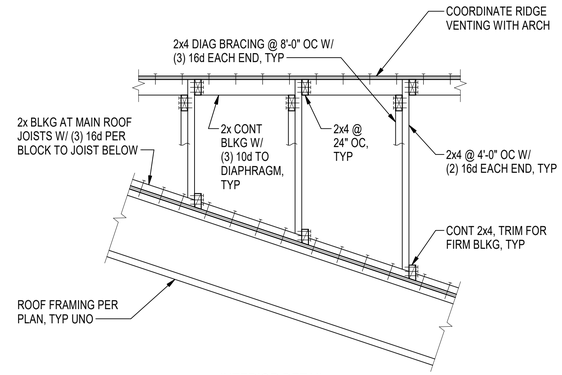

INTERIOR DETAIL

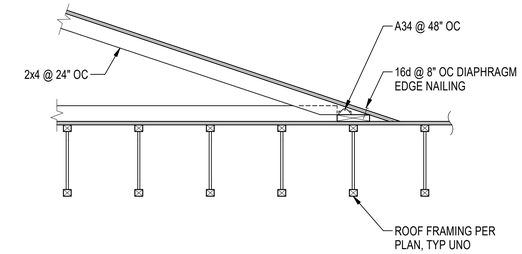

NOTE:

1. VENTILATION MAY BE REQUIRED AT BLOCKING. VERIFY METHOD WITH ENGINEER PRIOR TO CONSTRUCTION.

EDGE DETAIL

OVERFRAMING DETAIL 4
NTS

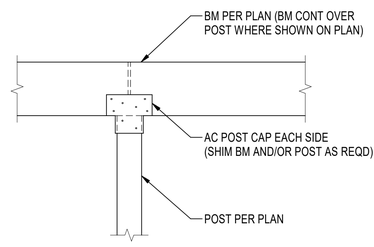

TYPICAL BEAM-TO-POST CONNECTION 6
NTS

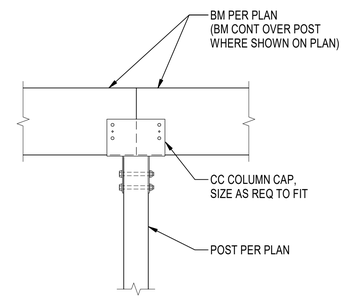

CC POST CONNECTION 7
NTS

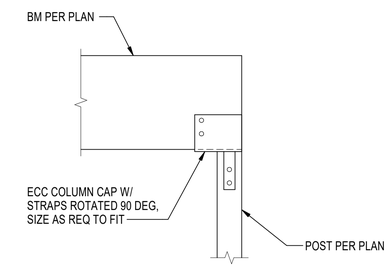

ECC POST CONNECTION 8
NTS

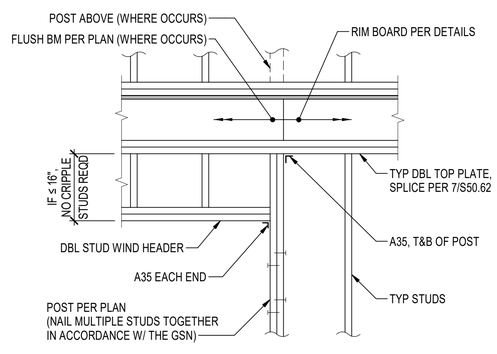

TYPICAL EXTERIOR FLUSH BEAM CONNECTION 10
NTS

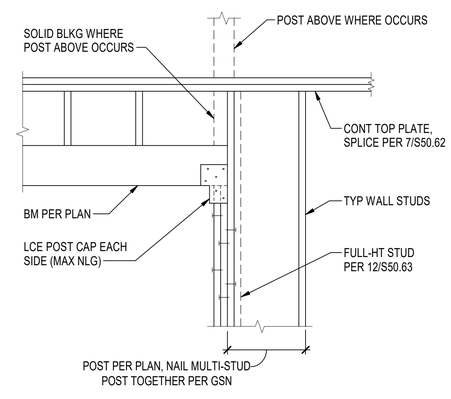

TYPICAL HEADER DETAIL 11
NTS

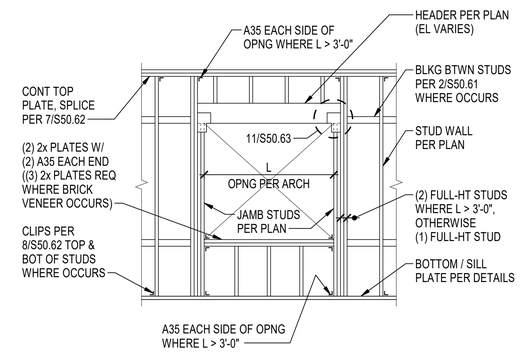

TYPICAL STRUCTURAL WALL OPENING 12
NTS

RICE fergus MILLER
ARCHITECTURE INTERIORS PLANNING VIZLAB
275 FIFTH STREET, SUITE 100
BREMERTON, WA 98337
360-377-8773
RFMARCH.COM

Reid Middleton
728 134th Street SW, Suite 200
Everett, Washington 98204
Ph: 425.741.3800
www.reidmiddleton.com

© Copyright 2023 Reid Middleton, Inc.

STATE OF WASHINGTON COLLIN MICHAEL MILLER 43107 PROFESSIONAL ENGINEER 10/12/23

STATION 57 ADDITION
GIG HARBOR FIRE AND MEDIC ONE
10521 CRESCENT VALLEY DR. NW
GIG HARBOR, WA 98332

PROJECT #	2022010.03
BID SET	
ISSUE DATE	JANUARY 8, 2024

REVISION SCHEDULE

AHJ APPROVAL STAMP

TYPICAL WOOD DETAILS

SHEET #
S50.63

DATE/ TIME PRINTED: 10/10/2023 11:53:10 AM
Autodesk Docs://Gig Harbor Fire Capital Facilities/2022010_03 GHFHMO_S3_STRU_2022.rvt

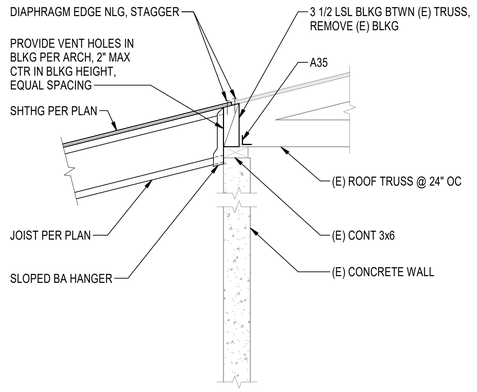

ROOF JOIST AT CONCRETE WALL 3
3/4" = 1'-0"

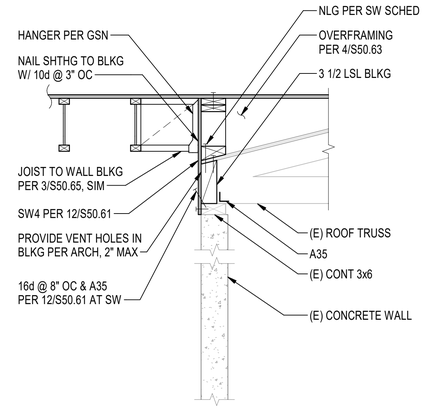

WOOD WALL ON CONCRETE WALL 4
3/4" = 1'-0"

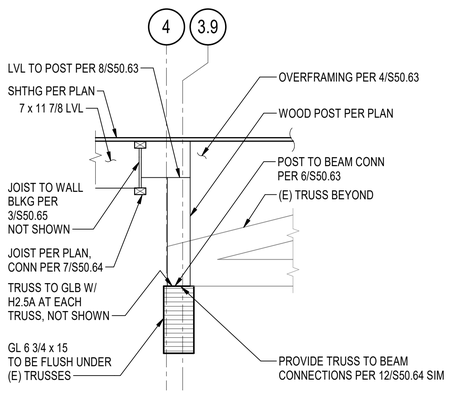

ROOF FRAMING SECTION 6
3/4" = 1'-0"

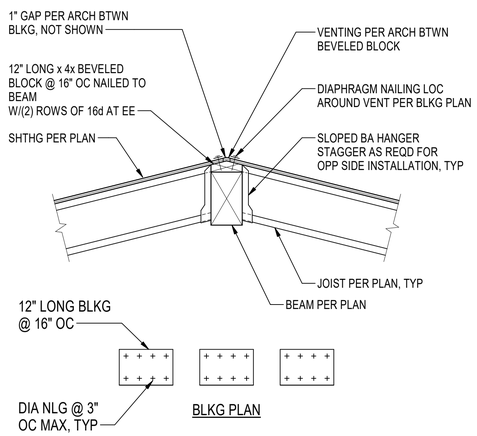

ROOF PEAK SECTION 7
3/4" = 1'-0"

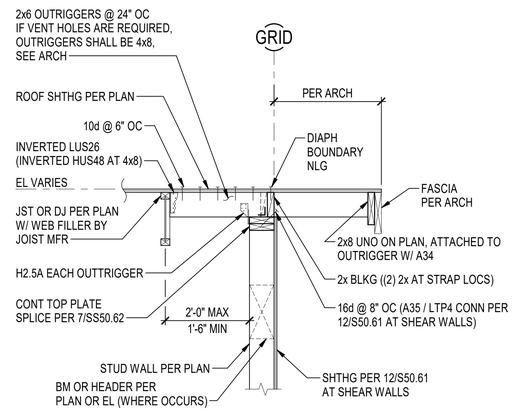

ROOF I-JOIST AT EXTERIOR WALL - PARALLEL 8
3/4" = 1'-0"

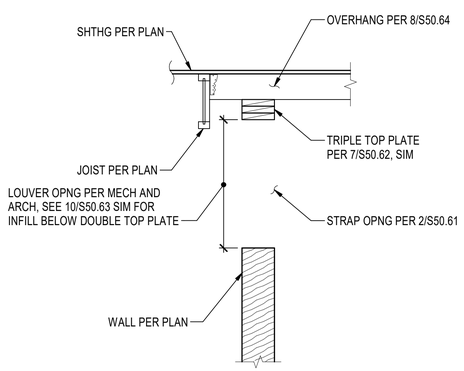

LOUVER OPENING SECTION 10
3/4" = 1'-0"

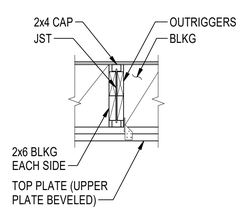

12A SECTION

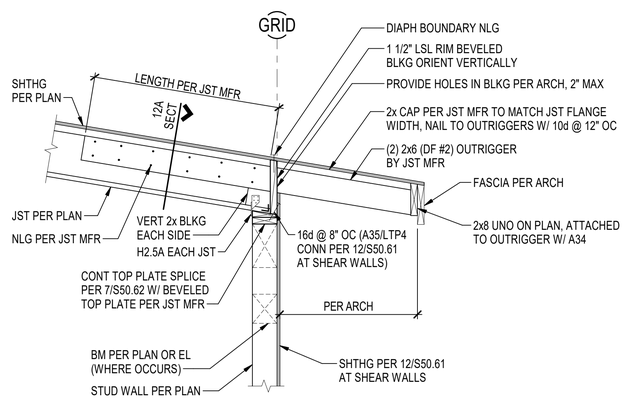

SLOPED ROOF OVERHANG SECTION 12
3/4" = 1'-0"

RICE fergus MILLER
ARCHITECTURE INTERIORS PLANNING VIZLAB
275 FIFTH STREET, SUITE 100
BREMERTON, WA 98337
360-377-8773
RFMARCH.COM

Reid Middleton
728 134th Street SW, Suite 200
Everett, Washington 98204
Ph: 425.741.3800
www.reidmiddleton.com
© Copyright 2023 Reid Middleton, Inc.

COUNTY OF WASHINGTON STATE OF WASHINGTON 43107 PROFESSIONAL ENGINEER
10/12/23

STATION 57 ADDITION
GIG HARBOR FIRE AND MEDIC ONE
10521 CRESCENT VALLEY DR. NW
GIG HARBOR, WA 98332

PROJECT #	2022010.03
BID SET	
ISSUE DATE	JANUARY 8, 2024

REVISION SCHEDULE

1	BUILDING PERMIT REVIEW	7/5/2023

AHJ APPROVAL STAMP

TYPICAL WOOD DETAILS

SHEET #
S50.64

DATE/ TIME PRINTED: 10/10/2023 11:53:10 AM
Autodesk Docs://Gig Harbor Fire Capital Facilities/2022010_03 GHFMO_S3_STRU_2022.rvt

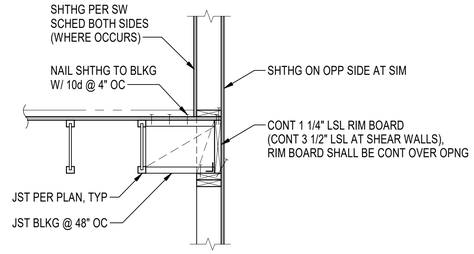

NOTES:

1. FOR ADDITIONAL INFORMATION NOT SHOWN SEE 4/S50.65.

JOISTS PARALLEL TO EXTERIOR WALL 3
NTS

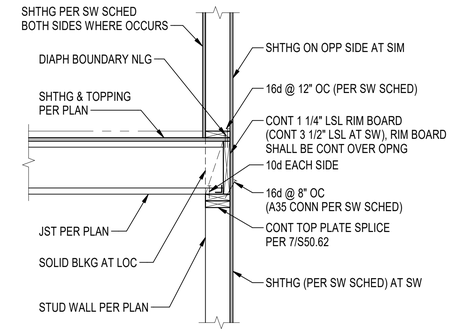

JOISTS BEARING ON EXTERIOR WALL 4
NTS

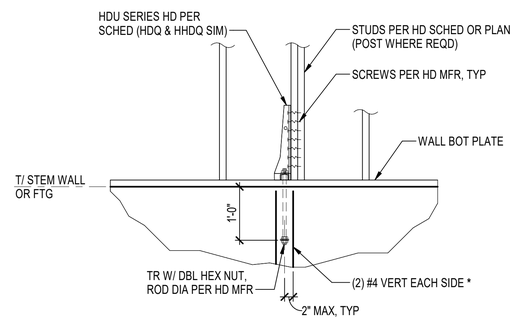

NOTE:

1. * REINFORCING SHOWN IS IN ADDITION TO REINFORCING REQUIRED BY OTHER FOUNDATION DETAILS.

HOLDOWN MID-WALL CONDITION 7
NTS

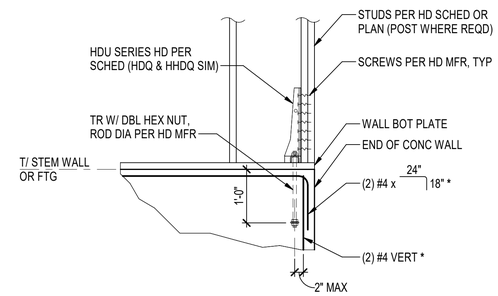

NOTE:

1. * REINFORCING SHOWN IS IN ADDITION TO REINFORCING REQUIRED BY OTHER FOUNDATION DETAILS.

HOLDOWN END / CORNER CONDITION 8
NTS

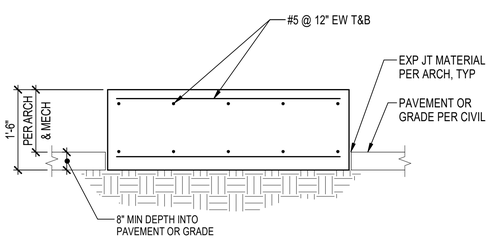

NOTES:

1. LOCATION AND SIZE PER ARCHITECTURAL AND MECHANICAL.
2. PAD SHALL EXTEND 6" ON ALL SIDES BEYOND THE EQUIPMENT DIMENSIONS.

EQUIPMENT PAD 9
NTS

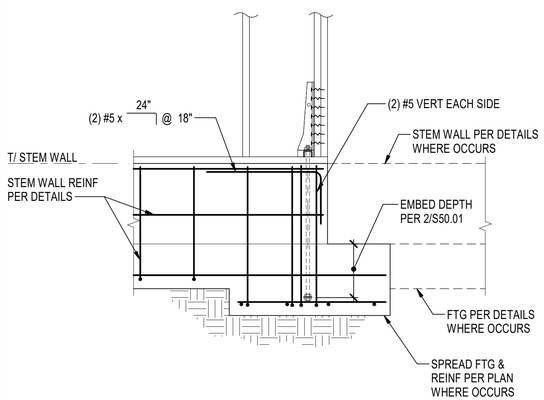

NOTE:

1. FOR ADDITIONAL INFORMATION NOT SHOWN SEE 10/S50.02.

HOLDOWN DETAIL 10
NTS

HOLDOWN SCHEDULE - WITH SCREWS										
MARK	MODEL (NOTE 1)	WOOD POST (NOTE 2)	2x POST NAILING (NOTE 3)	# OF SDS2.5 TO POST (NOTE 1)	SECOND ROW EDGE NAILING	ANCHOR BOLT TO CONCRETE (NOTES 4 AND 8) THREADED ROD AT WOOD FLOOR (NOTES 5 AND 8)				
						DIA	AB CONCRETE EMBED		ALTERNATE TO ANCHOR BOLT (NOTES 6 AND 8)	ALTERNATE TO ANCHOR BOLT IN FOUNDATION WALL (NOTES 7 AND 8)
							FDN WALL	FOOTING		
HD1	HDU2-SDS2.5	(2) 2x	12d @ 12" OC	6	NO	5/8"	-	-	PAB5	SSTB20
HD2	HDU4-SDS2.5	(2) 2x	12d @ 8" OC	10	YES	5/8"	-	-	PAB5	-
HD3	HDU5-SDS2.5	(2) 2x	12d @ 7" OC	14	YES	5/8"	-	-	PAB5	-
HD4	HDU8-SDS2.5	4x6	12d @ 6" OC	20	YES	5/8"	-	-	PAB7	SSTB28

NOTES:

1. "SDS2.5" IS 1/4" DIA x 2 1/2" STRONG-DRIVE WOOD SCREW (MODEL SDS25212), MANUFACTURED BY SIMPSON STRONG-TIE.
2. SIZES LISTED IN THE SCHEDULE ARE FOR THE NOMINAL THICKNESS OF WOOD POST PERPENDICULAR TO THE HOLDOWN. WIDTH OF THE POST IS THE SAME AS THE WIDTH OF THE WALL IN WHICH THE HOLDOWN IS LOCATED.
3. FASTEN TOGETHER 2x MEMBERS OF POST AT THE SPECIFIED SPACING. "12d" NAIL IS 0.148" DIA x 3 1/4" AT (3) 2x POSTS, FASTEN SECOND TO FIRST STUD AND THIRD TO SECOND STUD AT THE SPECIFIED SPACING.
4. "AB" IS A STRAIGHT, HEX-HEADED, CARBON STEEL ANCHOR BOLT COMPLYING WITH ASTM F1554, GRADE 36, CLASS 2A.
5. "TR" IS A CARBON STEEL STUD (e.g. THREADED ROD) COMPLYING WITH ASTM A307, GRADE A.
6. "PABx" IS A PRE-ASSEMBLED ANCHOR BOLT MANUFACTURED BY SIMPSON STRONG-TIE. INSTALL AT SAME EMBEDMENT LENGTHS AS SPECIFIED IN THE "AB CONCRETE EMBED" COLUMNS.
7. "SSTBxx" AND "SBx" ARE PROPRIETARY ANCHOR BOLTS COMPLYING WITH ICC-ES ESR-2611 AND MANUFACTURED BY SIMPSON STRONG-TIE. INSTALL PER MANUFACTURER'S INSTRUCTIONS.
8. INSTALL A CARBON STEEL HEX NUT COMPLYING WITH ASTM A563, GRADE A, AT EACH BOLT, EXCEPT FOR HDU14-SDS2.5 AND HHDQ14-SDS2.5 WHERE A HEAVY HEX NUT IS NEEDED.

HOLDOWN SCHEDULE - WITH SCREWS 12
NTS

RICE fergus MILLER
ARCHITECTURE INTERIORS PLANNING VIZLAB
275 FIFTH STREET, SUITE 100
BREMERTON, WA 98337
360-377-8773
RFMARCH.COM

Reid Middleton
728 134th Street SW, Suite 200
Everett, Washington 98204
Ph: 425.741.3800
www.reidmiddleton.com
© Copyright 2023 Reid Middleton, Inc.

COMMISSION EXPIRES 10/12/23

STATION 57 ADDITION
GIG HARBOR FIRE AND MEDIC ONE
10521 CRESCENT VALLEY DR. NW
GIG HARBOR, WA 98332

PROJECT # 2022010.03
BID SET
ISSUE DATE JANUARY 8, 2024

REVISION SCHEDULE

AHJ APPROVAL STAMP

TYPICAL WOOD DETAILS

SHEET #
S50.65

DATE/ TIME PRINTED: 10/10/2023 11:53:10 AM
Autodesk Docs://Gig Harbor Fire Capital Facilities/2022010_03 GHFMO_S3_STRU_2022.rvt

MECHANICAL SYMBOLS LEGEND

HYDRONIC SYSTEM LABELS

- PIPE BREAK (CONTINUATION)
- HYDRONIC SUPPLY
- HYDRONIC RETURN
- DIRECTION OF FLOW
- CAP
- HEAT TRACED PIPING

HYDRONIC VALVES AND SPECIALTIES

- F.O. / F.C. — 2-WAY ELECTRIC CONTROL VALVE (F.O. FAIL OPEN; F.C. FAIL CLOSED)
- 3-WAY ELECTRIC CONTROL VALVE
- 4-WAY CONTROL VALVE

DUCTWORK LABELS

- INTERNALLY LINED DUCT
- HIDDEN DUCT
- 16X12 — DUCT (1ST DIMENSION SIDE SHOWN, 2ND DIMENSION OTHER SIDE)
- REMOVE DUCT, PIPE OR MECH. EQUIPMENT
- FLEX DUCT
- RECTANGULAR SUPPLY DUCT OUT OF PAGE
- RECTANGULAR SUPPLY DUCT INTO PAGE
- SUPPLY DIFFUSER
- OUTSIDE AIR DIFFUSER
- RECTANGULAR RETURN / EXHAUST DUCT OUT OF PAGE
- RECTANGULAR RETURN / EXHAUST DUCT INTO PAGE
- OR — RETURN OR EXHAUST GRILLE
- TURNING VANES
- STRAIGHT TAP
- TAPERED FITTING
- BELL MOUTH FITTING
- CONICAL FITTING
- 45 DEG. ANGLE TAP
- ROUND ELBOW OUT OF PAGE
- ROUND ELBOW INTO PAGE
- ROUND DUCT OUT OF PAGE
- ROUND DUCT INTO PAGE
- ROUND DUCT BREAK (CONTINUATION)
- RECTANGULAR DUCT BREAK (CONTINUATION)
- FLEX CONNECTION

REFERENCE SYMBOLS

- M-1 — DETAIL NUMBER / SHEET
- FLAG NOTE
- 1 — REVISION TAG
- AHU-1 — MECHANICAL EQUIPMENT
- D / 0 — DIFFUSER/GRILLE TYPE / CFM
- 1 — SECTION NUMBER / SHEET NUMBER

LIFE SAFETY SYMBOLS

- CEILING RADIATION DAMPER
- OR — COMBINATION SMOKE/FIRE DAMPER
- HORIZONTAL SMOKE DAMPER
- FIRE DAMPER

CONTROL SYMBOLS

- VOLUME DAMPER
- M — MOTORIZED CONTROL DAMPER
- T — THERMOSTAT IN DUCT
- P — PRESSURE SENSOR IN DUCT
- OR — REMOTE OPERATED VOLUME DAMPER
- BACKDRAFT DAMPER
- PRESSURE INDEPENDENT VOLUME CONTROLLER (TROX VFC)
- PRESSURE INDEPENDENT VOLUME CONTROLLER W/ ACTUATOR (TROX VFC EØ / MØ)
- T — THERMOSTAT, MOUNT @ 4'-0" A.F.F.
- S — SENSOR
- C — CONTROL DEVICE
- D — MAGNETIC DOOR SWITCH
- CO / GEF-1 — CARBON MONOXIDE DETECTOR WITH FAN INDICATED
- CO2 — CARBON DIOXIDE DETECTOR

PIPING SYSTEM LABELS

- G — NATURAL GAS OR PROPANE
- BALL VALVE MANUAL LEVER
- BUTTERFLY VALVE MANUAL LEVER
- BUTTERFLY GEAR VALVE
- GLOBE VALVE MANUAL LEVER
- BALANCE VALVE (CIRCUIT SETTER)
- BALANCE VALVE (PRESSURE INDEPENDENT)
- PIPE TO DRAIN
- PRESSURE SAFETY VALVE
- AAV — AUTOMATIC AIR VENT
- MAV — MANUAL AIR VENT
- WYE STRAINER
- WYE STRAINER WITH VALVE AND HOSE END CAP
- HEAT TRACE PIPING
- HOSE END AND CAP
- EXPANSION LOOP

REFERENCE DESIGN CODES

2018 INTERNATIONAL BUILDING CODE (IBC)
2018 WASHINGTON STATE ENERGY CODE (WSEC)
2018 INTERNATIONAL FIRE CODE (IFC)
2018 INTERNATIONAL MECHANICAL CODE (IMC)
2018 INTERNATIONAL FUEL GAS CODE (IFGC)
2020 NATIONAL ELECTRICAL CODE (NEC)
2018 UNIFORM PLUMBING CODE (UPC)

ABBREVIATIONS

ACT	ACOUSTICAL CEILING TILE
ADA	AMERICANS WITH DISABILITIES ACT
ADJ	ADJUSTABLE
AFF	ABOVE FINISHED FLOOR
AFG	ABOVE FINISHED GRADE
ALT	ALTERNATE
AP	ACCESS PANEL
APPROX	APPROXIMATE
ARCH	ARCHITECTURAL/ARCHITECT
AS	AIR SEPARATOR
AUX	AUXILIARY
BFF	BELOW FINISHED FLOOR
BHP	BRAKE HORSE POWER
BLDG	BUILDING
BOP	BOTTOM OF PIPE
BTU	BRITISH THERMAL UNIT
BTUH	BRITISH THERMAL UNIT PER HOUR
CA	COMBUSTION AIR
CFH	CUBIC FEET PER HOUR
CFM	CUBIC FEET PER MINUTE
C/L	CENTER LINE
CLG	CEILING
CO	CARBON MONOXIDE
CO2	CARBON DIOXIDE
COND	CONDENSATE
CW	COLD WATER
CX	CONNECT TO EXISTING
dB	DECIBEL
DB °F	DRY BULB TEMPERATURE
° OR DEG.	DEGREE
Ø OR DIA	DIAMETER
DL	DOOR LOUVER
DN	DOWN
DWG(S)	DRAWING(S)
DWV	DRAIN, WASTE, VENT
EX	EXISTING/EXISTING TO REMAIN
EA	EACH
EA	EXHAUST AIR
EAT	ENTERING AIR TEMPERATURE
ERU	ENERGY RECOVERY UNIT
ESP	EXTERNAL STATIC PRESSURE
ET	EXPANSION TANK
EWH	ELECTRIC WALL HEATER
EXP	EXPANSION
FC	FAIL CLOSED
FSD	FIRE/SMOKE DAMPER
FF	FINISHED FLOOR
FLA	FULL LOAD AMPS
FO	FAIL OPEN
FP	FIRE PROTECTION
FPM	FEET PER MINUTE
FPS	FEET PER SECOND
FT	FEET/FOOT
FTG	FOOTING
FOIC	FURNISHED BY OWNER INSTALLED BY CONTRACTOR
FOIO	FURNISHED BY OWNER INSTALLED BY OWNER
FSD	FIRE/SMOKE DAMPER
G	NATURAL GAS
GA	GAUGE
GAL	GALLON
GALV	GALVANIZED
G.C.	GENERAL CONTRACTOR
GSM	GALVANIZED SHEET METAL
H	HEIGHT
HD	HEAD
HP	HORSEPOWER
HVAC	HEATING VENTILATING AND AIR CONDITIONING
HW	HOT WATER
HX	HEAT EXCHANGER
HZ	HERTZ
ID	INSIDE DIAMETER/DIMENSION
IN	INCH/INCHES
IN WC	INCHES WATER COLUMN
KW	KILOWATT/KILOWATTS
LAT	LEAVING AIR TEMPERATURE
LBS	POUNDS
LF	LINEAL FOOT
LRA	LOCKED ROTOR AMPS
LTG	LIGHTING
LWT	LEAVING WATER TEMPERATURE
MBH	1000 BRITISH THERMAL UNIT PER HOUR
MCD	MOTORIZED CONTROL DAMPER
MD	MOTORIZED DAMPER
MED	MEDIUM
MEP	MECHANICAL, ELECTRICAL & PLUMBING
MEZZ	MEZZANINE
MIN	MINIMUM OR MINUTE
MISC	MISCELLANEOUS
N/A	NOT APPLICABLE
NC	NORMALLY CLOSED
NEG	NEGATIVE
NIC	NOT IN CONTRACT
NO	NORMALLY OPEN
NOM	NOMINAL
NPT	NATIONAL PIPE THREAD
NTS	NOT TO SCALE
OA/OSA	OUTSIDE AIR
OBD	OPPOSED BLADE DAMPER
OC	ON CENTER
OD	OUTSIDE DIAMETER
OFCI	OWNER FURNISHED CONTRACTOR INSTALLED
OFOI	OWNER FURNISHED OWNER INSTALLED
ΔP	PRESSURE DIFFERENTIAL
PERF	PERFORATED
Φ OR PH	PHASE
PIVD	PRESSURE INDEPENDENT VOLUME DAMPER
PLBG	PLUMBING
POC	POINT OF CONNECTION
PRV	PRESSURE REDUCING VALVE
PSF	POUNDS PER SQUARE FOOT
PSI	POUNDS PER SQUARE INCH
PSIG	POUNDS PER INCH GAUGE
PTAC	PACKAGE TERMINAL AIR CONDITIONER
QTY	QUANTITY
RA	RETURN AIR
RH	RELATIVE HUMIDITY
RM	ROOM
RPBP	REDUCED PRESSURE BACKFLOW PREVENTER
RPM	REVOLUTIONS PER MINUTE
RLX	RELOCATE EXISTING
RTU	ROOF TOP UNIT
RV	RELIEF VALVE
RX	REMOVE EXISTING
SA	SUPPLY AIR
SD	SMOKE DETECTOR
SF	SQUARE FOOT
S.L.	SOUND LINER
SP	STATIC PRESSURE
SPEC	SPECIFICATION
S/S, OR SS	STAINLESS STEEL
STD	STANDARD
T&P	TEMPERATURE AND PRESSURE RELIEF VALVE
TBD	TO BE DETERMINED
TEMP	TEMPERATURE
TOB	TOP OF BEAM
TOC	TOP OF CONCRETE
TOD	TOP OF DECK
TOJ	TOP OF JOIST
TOS	TOP OF SLAB/TOP OF STEEL
T&P	TEMPERATURE & PRESSURE
TSP	TOTAL STATIC PRESSURE
TYP	TYPICAL
UL	UNDERWRITERS LABORATORY
UNO	UNLESS NOTED OTHERWISE
UTR	UP THROUGH ROOF
V	VOLT
VAV	VARIABLE AIR VOLUME
VERT	VERTICAL
VFD	VARIABLE FREQUENCY DRIVE
VIB	VALVE-IN-BOX
VOL	VOLUME
W/	WITH
W/IN	WITHIN
W/O	WITHOUT
WB °f	WET BULB TEMPERATURE
WC	WATER COLUMN
WPD	WATER PRESSURE DROP
WT	WEIGHT

RICE fergus MILLER
ARCHITECTURE INTERIORS PLANNING VIZLAB
275 FIFTH STREET, SUITE 100
BREMERTON, WA 98337
360-377-8773
RFMARCH.COM

SIDER + BYERS
MECHANICAL + ELECTRICAL ENGINEERS
192 Nickerson, Suite #300
Seattle, Washington 98109
Phone: 206.285.2966

STATION 57 ADDITION
GIG HARBOR FIRE AND MEDIC ONE
10521 CRESCENT VALLEY DR. NW
GIG HARBOR, WA 98332

PROJECT # 22043
BID SET
ISSUE DATE JANUARY 8, 2024

REVISION SCHEDULE

AHJ APPROVAL STAMP

COVER SHEET

SHEET #
M00.01

COMMISSIONING NOTES

1. BUILDING COMMISSIONING BY A CERTIFIED COMMISSIONING PROFESSIONAL (CCXP) SHALL BE COMPLETED FOR THE MECHANICAL SYSTEMS, SERVICE WATER HEATING SYSTEMS AND ENERGY METERING SYSTEMS ON THIS PROJECT IN ACCORD WITH THE COMMERCIAL ENERGY CODE SECTION C408 AND SPECIFICATION SECTION 230800. THE GOAL OF COMMISSIONING IS TO VERIFY THAT EQUIPMENT, CONTROLS AND THE SEQUENCING OF SUCH OPERATE AS INTENDED. THE COMMISSIONING DOCUMENTATION THAT IS REQUIRED IS THE PROOF OF THIS OPERATION. THE FOLLOWING TASKS ARE REQUIRED FOR COMMISSIONING. SEE SECTION 230800 FOR ADDITIONAL REQUIREMENTS.

2. COMMISSIONING PLAN: THE CCXP SHALL DEVELOP A PLAN WHICH OUTLINES THE ORGANIZATION, SCHEDULE, ALLOCATION OF RESOURCES AND DOCUMENTATION REQUIREMENTS OF THE COMMISSIONING PROCESS. ITEMS 1 THROUGH 4 AS SPECIFIED SHALL BE PREPARED AND SUBMITTED WITH THE MECHANICAL PERMIT. ITEMS 5 THROUGH 8 AS SPECIFIED SHALL BE SUBMITTED TO BUILDING DEPARTMENT PRIOR TO THE FIRST MECHANICAL INSPECTION. ALL ITEMS SHALL BE SUBMITTED WITH THE MECHANICAL SUBMITTALS.

3. PRELIMINARY COMMISSIONING REPORT: COMPLETION OF THE COMMISSIONING TEST PROCEDURES AND RESULTS SHALL BE CERTIFIED BY THE CCXP. REPORT SHALL NOTE DEFICIENCIES FOUND DURING TESTING, CORRECTIVE ACTION TAKEN OR THE ANTICIPATED DATE OF CORRECTION, CONDITIONS UNDER WHICH THE TESTING WAS PERFORMED AND STATUS OF ANY DEFERRED TESTS.
   - A. SUBMISSION OF THIS REPORT IS REQUIRED PRIOR TO FINAL MECHANICAL & PLUMBING INSPECTIONS AND CERTIFICATE OF OCCUPANCY.
   - B. A COPY OF THIS REPORT SHALL BE MADE AVAILABLE TO THE CODE OFFICIAL.

4. WITHIN 90 DAYS OF RECEIPT OF THE BUILDING CERTIFICATE OF OCCUPANCY, THE PROJECT RECORD DRAWINGS, O&M MANUALS, FINAL BALANCING REPORT, FINAL COMMISSIONING REPORT AND DOCUMENTATION OF COMPLETED OWNER TRAINING SHALL BE SUBMITTED FOR REVIEW.

5. RECORD DRAWINGS: LOCATION AND PERFORMANCE DATA ON EACH PIECE OF INSTALLED EQUIPMENT, AS-INSTALLED CONFIGURATION OF DUCT AND PIPE DISTRIBUTION SYSTEM, INCLUDING SIZES, AND THE TERMINAL AIR AND WATER DESIGN FLOW RATES OF THE ACTUAL INSTALLATION.

6. OPERATION & MAINTENANCE MATERIALS: SUBMIT ALL OF THE FOLLOWING.
   - A. EQUIPMENT SIZE, SELECTED OPTIONS, AND REQUIRED MAINTENANCE.
   - B. MANUFACTURER'S O&M MANUAL FOR EACH PIECE OF EQUIPMENT.
   - C. NAME AND ADDRESS OF SERVICE AGENCY.
   - D. CONTROLS MAINTENANCE AND CALIBRATION INFORMATION INCLUDING WIRING DIAGRAMS, SCHEMATICS, RECORD DRAWINGS AND CONTROL SEQUENCES. SETPOINTS SHALL BE PERMANENTLY RECORDED IN THESE DOCUMENTS.
   - E. NARRATIVE OF HOW EACH SYSTEM IS INTENDED TO OPERATE.

7. SYSTEM ADJUSTING & BALANCING: ALL HVAC, HYDRONIC AND SERVICE HOT WATER SYSTEMS SHALL BE BALANCED BY A LICENSED CONTRACTOR IN ACCORDANCE WITH ACCEPTED ENGINEERING STANDARDS AND SECTION 230593. FINAL FLOW RATES SHALL BE WITHIN TOLERANCES SPECIFIED. EACH AIR INLET OR OUTLET AND HYDRONIC COIL SHALL BE EQUIPPED WITH A MEANS FOR BALANCING.

8. FUNCTIONAL PERFORMANCE TESTING (FPT): THE CCXP SHALL PROVIDE AND EXECUTE WRITTEN PROCEDURES WHICH CLEARLY DESCRIBE THE INDIVIDUAL SYSTEMATIC TEST PROCEDURES, THE EXPECTED SYSTEMS' RESPONSE, ACCEPTANCE CRITERIA FOR
   EACH PROCEDURE, THE ACTUAL RESPONSE OR FINDINGS AND ANY NOTES. TESTING SHALL AFFIRM OPERATION DURING ACTUAL
   OR SIMULATED WINTER AND SUMMER CONDITIONS AND DURING FULL OUTSIDE AIR CONDITIONS.
   - A. EQUIPMENT FPT SHALL DEMONSTRATE THE CORRECT INSTALLATION AND OPERATION OF EACH COMPONENT, SYSTEM, AND SYSTEM-TO-SYSTEM INTERTIE RELATIONSHIP. TESTING SHALL INCLUDE ALL MODES AND SEQUENCE OF OPERATIONS, INCLUDING FULL-LOAD, PART-LOAD, EMERGENCY, ALARMS AND LOSS OF POWER.
   - B. CONTROL SYSTEMS SHALL BE TESTED TO ENSURE THAT CONTROL DEVICES, COMPONENTS, EQUIPMENT AND SYSTEMS ARE CALIBRATED, ADJUSTED AND OPERATE IN ACCORDANCE WITH THE PLANS AND SPECIFICATIONS. SEQUENCE OF OPERATION SHALL BE FUNCTIONALLY TESTED TO DOCUMENT THEY OPERATE AS REQUIRED.
   - C. ECONOMIZER SHALL UNDERGO A FUNCTIONAL TEST TO DETERMINE THAT THEY OPERATE ACCORDING TO MANUFACTURER'S SPECIFICATIONS.

9. OWNER TRAINING: PROVIDE SYSTEM/EQUIPMENT OVERVIEW (WHAT IT IS, WHAT IT DOES AND WHICH OTHER SYSTEMS AND OR EQUIPMENT DOES IT INTERFACE WITH). REVIEW THE AVAILABLE O&M MATERIALS. REVIEW THE PROJECT RECORD DRAWINGS, PROVIDE HANDS-ON DEMONSTRATION OF ALL NORMAL MAINTENANCE PROCEDURES, NORMAL OPERATING MODES, AND ALL EMERGENCY SHUTDOWN AND START-UP PROCEDURES. INCLUDE WRITTEN DOCUMENTATION THAT ALL THE PREVIOUS HAS BEEN COMPLETED.

10. FINAL COMMISSIONING REPORT: THE CCXP SHALL COMPLETE AND CERTIFY THE RESULTS OF ALL FUNCTIONAL PERFORMANCE TESTS AND THAT THE COMMISSIONING PLAN HAS BEEN FULLY EXECUTED. REPORT SHALL INCLUDE:
    - A. DISPOSITION OF ALL DEFICIENCIES FOUND DURING TESTING, INCLUDING DETAILS OF CORRECTIVE MEASURES USED OR PROPOSED.
    - B. ALL FUNCTIONAL PERFORMANCE TEST PROCEDURES USED DURING THE COMMISSIONING PROCESS INCLUDING CRITERIA FOR TEST ACCEPTANCE, PROVIDED HEREIN FOR REPEATABILITY.

11. BUILDINGS OR PORTIONS THEREOF, SHALL NOT BE CONSIDERED ACCEPTABLE FOR FINAL INSPECTION UNTIL THE CODE OFFICIAL HAS RECEIVED A LETTER OF TRANSMITTAL FROM THE BUILDING OWNER ACKNOWLEDGING RECEIPT OF THE PRELIMINARY COMMISSIONING REPORT. THIS MAY BE ACCOMPLISHED BY SUBMITTING THE COMMISSIONING COMPLIANCE CHECKLIST.

12. THE MECHANICAL CONTRACTOR SHALL NOT BE CONSIDERED SUBSTANTIALLY COMPLETE UNTIL THE PRELIMINARY COMMISSIONING REPORT HAS BEEN APPROVED BY THE ENGINEER.

HVAC ENERGY CODE NOTES

1. SEE SCHEDULES FOR EQUIPMENT TYPE, CAPACITY AND EFFICIENCY. ALL EQUIPMENT SHALL MEET MINIMUM EFFICIENCY PER C403.3.2.
2. THERMOSTATIC CONTROLS IN THE SAME ZONE OR IN NEIGHBORING ZONES CONNECTED BY OPENINGS LARGER THAN 10% OF THE FLOOR AREA OF EITHER ZONE SHALL BE INTERLOCKED TO NOT ALLOW SIMULTANEOUS HEATING AND COOLING.
3. HEAT PUMPS WITH SUPPLEMENTARY ELECTRIC HEAT SHALL INCLUDE MICROPROCESSOR CONTROLS THAT MINIMIZE ELECTRIC HEAT USAGE DURING START-UP, SET-UP, AND DEFROST CONDITIONS. CONTROLS SHALL ANTICIPATE NEED FOR HEAT AND USE COMPRESSION HEATING AS THE FIRST STAGE. CONTROLS SHALL INDICATE WHEN ELECTRIC HEAT IS BEING USED THROUGH VISUAL MEANS. ELECTRIC HEAT SHALL NOT OPERATE ABOVE 40 F OUTSIDE AIR TEMPERATURE.
4. THERMOSTATIC CONTROLS SHALL BE CONFIGURED WITH AT LEAST A 5F DEADBAND BETWEEN HEATING AND COOLING SETPOINTS.
5. THERMOSTATS (OTHER THAN GROUP R) SHALL BE 7-DAY PROGRAMMABLE WITH AUTOMATIC SETBACK CONTROLS SET DOWN TO 55F AND UP TO 85F. CONTROLS SHALL MAINTAIN PROGRAMMING FOR AT LEAST 10 HOURS DURING LOSS OF POWER. CONTROLS SHALL HAVE A MANUAL 2 HR OVERRIDE FOR TEMPORARY OPERATION. CONTROLS SHALL ADJUST THE DAILY START TIME FOR MORNING WARMUP PRIOR TO SCHEDULED OCCUPANCY.
6. PROVIDE AMCA CLASS 1A MOTORIZED CONTROL DAMPERS FOR OUTSIDE AIR INTAKES, EXHAUST OUTLETS, RELIEF OPENINGS, STAIRWAY AND SHAFT VENTS AND RETURN SIDE OF AIRSIDE ECONOMIZERS.
7. AIR-COOLED UNITARY DIRECT-EXPANSION UNITS WITH A COOLING CAPACITY OF 54 MBH OR GREATER THAT ARE EQUIPPED WITH AN ECONOMIZER SHALL INCLUDE FAULT DETECTION AND DIAGNOSTICS (FDD).
8. PROVIDE GAS-FIRED HEATING EQUIPMENT WITH MODULATING OR STAGED COMBUSTION CONTROL FOR ALL EQUIPMENT OVER 225 MBH.
9. THERMOSTATS (GROUP R) SHALL BE 5-2 PROGRAMMABLE SCHEDULE WITH AT LEAST 2 SETBACK PERIODS PER DAY.
10. PROVIDE DUCT, SHAFT AND PLENUM INSULATION PER C403.2.8 AND SPECIFICATION SECTION 23 07 00.
11. SEAL ALL TRANSVERSE AND LONGITUDINAL SEAMS, JOINTS AND CONNECTIONS OF ALL DUCTWORK WITH WELDS, GASKETS OR MASTICS.
12. PROVIDE PIPE INSULATION PER ENERGY CODE SECTION C403.2.9 AND SPECIFICATION SECTION 23 07 00.
13. INSULATION EXPOSED TO WEATHER SHALL BE PROTECTED FROM DAMAGE, SUNLIGHT, MOISTURE AND WIND. PROVIDE JACKET AND ALUMINUM COVERS. ADHESIVE TAPE IS NOT PERMITTED.
14. SINGLE FAN OR MULTIPLE FANS IN PARALLEL WITH COMBINED MOTOR NAMEPLATE OVER 5HP SHALL HAVE A FAN EFFICIENCY GRADE (FEG) OF 67 OR HIGHER AND SHALL BE SELECTED TO OPERATE WITHIN 15% OF THE MAXIMUM TOTAL EFFICIENCY OF THE FAN.
15. COOLING SYSTEMS 65 MBH AND GREATER SHALL HAVE TWO SPEED FAN CONTROL OR MODULATING FAN CONTROL.
16. FAN AND PUMP MOTORS 7.5 HP AND GREATER SHALL BE PROVIDED WITH A VFD.
17. ECONOMIZERS SHALL BE INTEGRATED WITH MECHANICAL COOLING AND SHALL BE CAPABLE OF PROVIDING PARTIAL ECONOMIZER COOLING EVEN WHEN ADDITIONAL MECHANICAL COOLING IS REQUIRED.
18. AIR ECONOMIZERS SHALL HAVE FIXED DRY-BULB HIGH-LIMIT SHUTOFF CONTROL NOT TO EXCEED 75 DEG. F.
19. ALL ELECTRIC MOTORS SHALL MEET THE EFFICIENCY REQUIREMENTS OF TABLES C405.8(1) THROUGH C405.8(4).
20. FAN MOTORS 1/12 HP UP TO 1 HP SHALL BE ECM.
21. PROVIDE A MEANS OF BALANCING EVERY AIR INLET AND OUTLET AND EVERY AIR OR WATER TERMINAL DEVICE.
22. ALL PIPE AND DUCT INSULATION SHALL BE LABELLED WITH ITS THICKNESS AND INSULATING VALUE (R OR K).

HVAC GENERAL NOTES

1. THESE PLANS ARE SCHEMATIC AND DO NOT SHOW EXACT ROUTING OR EVERY OFFSET, WHICH MAY BE REQUIRED. THE HVAC CONTRACTOR IS TO COORDINATE WITH ALL OTHER TRADES AND IS TO VERIFY ALL CLEARANCES BEFORE COMMENCING WORK.
2. MATERIALS, METHODS AND INSTALLATION SHALL COMPLY WITH THE PROVISIONS OF THE LATEST EDITION OF THE INTERNATIONAL MECHANICAL CODE, INTERNATIONAL BUILDING CODE, INTERNATIONAL FIRE CODE AND LOCAL CODES AND ORDINANCES.
3. DUCT CONSTRUCTION AND HANGING SHALL COMPLY WITH THE LATEST IMC AND WITH CURRENT SMACNA STANDARDS.
4. JOINTS OF DUCT SYSTEM SHALL BE SEALED WITH GASKETS OR LISTED MASTIC TYPE DUCT SEALANT.
5. DUCTS SHALL BE INSULATED AS INDICATED ON PLANS TO MEET THE REQUIREMENTS OF THE CURRENT INTERNATIONAL ENERGY CODE AND SPECIFICATION.
6. FLEXIBLE DUCTS SHALL ONLY BE USED WHERE SHOWN AND SHALL NOT EXCEED 6 FT IN LENGTH UNLESS NOTED OTHERWISE.
7. PROVIDE EARTHQUAKE RESTRAINT FOR HVAC EQUIPMENT IN ACCORDANCE WITH THE CURRENT IBC.
8. PIPING PENETRATIONS OF FIRE RATED WALLS OR FLOOR SHALL BE SLEEVED AND FIRE STOPPED WITH LISTED MATERIALS SO AS TO MAINTAIN THE INTEGRITY AND RATING OF THE FLOOR OR WALL.
9. PROVIDE RETURN DUCT SMOKE DETECTOR(S) FOR AUTOMATIC SHUT DOWN OF ALL HEATING OR COOLING EQUIPMENT DELIVERING IN EXCESS OF 2000 CFM IN ACCORDANCE WITH THE CURRENT INTERNATIONAL MECHANICAL CODE. POWER WIRING AND INTERLOCK WIRING WITH THE BUILDING FIRE ALARM SYSTEM IS BY THE ELECTRICAL CONTRACTOR.
10. HVAC EQUIPMENT, VALVES AND DAMPERS SHALL BE LOCATED IN EASILY ACCESSIBLE LOCATIONS, UNLESS SHOWN ON ARCHITECTURAL DRAWINGS. REQUIRED ACCESS PANELS SHALL BE PROVIDED BY THE HVAC CONTRACTOR AND INSTALLED BY THE GENERAL CONTRACTOR.
11. HVAC CONTRACTOR MUST COORDINATE WITH LIGHTING FIXTURES PRIOR TO DUCT AND PIPING INSTALLATION.

RICE fergus MILLER
ARCHITECTURE INTERIORS PLANNING VIZLAB
275 FIFTH STREET, SUITE 100
BREMERTON, WA 98337
360-377-8773
RFMARCH.COM

SIDER + BYERS
MECHANICAL + ELECTRICAL ENGINEERS
192 Nickerson, Suite #300
Seattle, Washington 98109
Phone: 206.285.2966

STATION 57 ADDITION
GIG HARBOR FIRE AND MEDIC ONE
10521 CRESCENT VALLEY DR. NW
GIG HARBOR, WA 98332

PROJECT # 22043

BID SET

ISSUE DATE JANUARY 8, 2024

REVISION SCHEDULE

AHJ APPROVAL STAMP

NOTES

SHEET #
M00.02

SPLIT SYSTEM HEAT PUMP SCHEDULE

INDOOR UNIT																OUTDOOR UNIT										
				SUPPLY			COOLING					ELECTRICAL		SOUND							ELECTRICAL					
MARK	MAKE	SERVES	MODEL	TOTAL CFM	ESP W.C.	OSA CFM	TOTAL MBH	SENS MBH	EAT DB / WB	OAT DB	HEATING MBH OUTPUT @ 20 OAT	VOLT / PH	MCA	LEVEL dBA	OP. WT. LBS.	MARK	MAKE	MODEL	SEER2	HSPF2	VOLT/PH	MCA	MOCP	dbA	OP. WT. LBS.	NOTES:
																CU-3	TRANE/MITSUBISHI	NTXSKS09A112AA	24.0	10	230/1	9	15	50	88	
FC-8	TRANE/MITSUBISHI	SR-5	NTXCKS09A112AA	300	N/A	--	8.9	7.8	75/63	90.0	6.4	230/1	0.25	31	37											ALL

NOTES
1. FACTORY PROVIDED WASHABLE FILTER.
2. NEOPRENE MOUNTING ISOLATION.

A. TAR-40MA REMOTE CONTROLLER.
B. INTEGRAL CONDENSATE PUMP
C. CONNECT TO EXISTING TC-24A CENTRAL CONTROLLER.

ENERGY RECOVERY VENTILATOR SCHEDULE

				SUPPLY				EXHAUST				FAN POWER	HEAT EXCHANGER AHRI 1060		HEAT			ELECTRICAL				WGT.	
MARK	MAKE	MODEL	TYPE	CFM	ESP	BHP	HP	CFM	ESP	BHP	HP	(W/CFM)	MATERIAL	WINTER SENS.	INPUT	OUTPUT	EFF	MCA	MOCP	VOLT/PH	SCCR	LBS	NOTES
ERV-1	VENTACITY	VS900 CME (ERV)	CEILING	700 (7)	0.34	0.55	0.63	700	0.34	0.55	0.63	<1.0	PLATE	86.1 EFF.	5.3 KW	SCR	---	32	35	240/1	NOTE B	500	ALL

NOTES:
1. SCR FROST CONTROL ELECTRIC PRE-HEATER WITH SINGLE POINT POWER
2. MERV 13 SUPPLY FILTERS; MERV 8 EXHAUST FILTERS
3. VARIABLE SPEED MOTOR CONTROL
4. FOAM INSULATION, GLAVANIZED STEEL INNER/OUTER CASING
5. PROVIDE WITH EXTERNAL CONDENSATE PUMP
6. PROVIDE CONDENSATE DRAIN SIPHON
7. INCREASE SUPPLY AIRFLOW TO 900 CFM FOR LAUNDRY MAKEUP SEE SPEC 230593

A. FACTORY SUPPLIED TOUCH-SCREEN CONTROLLER W/REMOTE DAMPER CONTROL.
B. PROVIDE RATING PER SPECIFICATIONS AND ELECTRICAL.

FAN SCHEDULE

MARK	SERVES	MAKE	MODEL	TYPE	CFM	ESP INCH WC	RPM	BHP	MOTOR HP (W)	ELEC VOLT/PH	WGT. LBS	MAX SOUND	NOTES:
SF-2 (EXISTING)	VENTILATION	GREENHECK	SQ-75	INLINE CENT	150 (1)	0.4	1550	0.03	1/30 HP	115 / 1	50	77 DBA	1

NOTES:
1. INCREASE AIRFLOW TO 150 CFM

PENTHOUSE SCHEDULE

MARK	MAKE	MODEL	SIZE	AIRFLOW DIRECTION	CFM	P.D. IN WG	FREE AREA	MATERIAL	WEIGHT (LBS)	NOTES:
PH-1	GREENHECK	WIH	16X16	INTAKE	900	0.045	2.9	ALUMINUM	50	ALL

NOTES:
1. 1" HOOD INSULATION
2. ALUMINUM BIRDSCREEN AND ALUMINUM INSECT SCREEN
3. FACTORY CURB W/ LINER, MATCH ROOF SLOPE
4. CLASS 1A INSULATED MOTORIZED CONTROL DAMPER.
5. ALUMINUM INTAKE FILTERS.

FIRE/SMOKE DAMPER SCHEDULE

MARK	LEVEL	LOCATION	HVAC SYSTEM	UL LISTING	FIRE RATING (HR)	VOLT/ PHASE	NOTES:
FSD-1	LEVEL 1	SR-5	FC-3	555/555S	1.5	120/1	ALL
FSD-2	LEVEL 1	SR-5	FC-3	555/555S	1.5	120/1	ALL
FSD-3	LEVEL 1	SR-5	SF-2	555/555S	1.5	120/1	ALL
FSD-4	LEVEL 1	SR-5	FC-3	555/555S	1.5	120/1	ALL

NOTES:
1. CONFIRM EXACT QUANTITIES, LOCATIONS AND CONNECTION REQUIREMENTS
2. POWER BY EC
3. WIRING TO FIRE ALARM SYSTEM NOT BY M.C.
4. VERIFY SIZE PRIOR TO ORDERING
5. PROVIDE WITH INTEGRAL SMOKE DETECTOR.

LOUVER SCHEDULE

MARK	MAKE	MODEL	WIDTH	HEIGHT	FREE AREA	MATERIAL	FINISH	NOTES:
L-6	GREENHECK	ESD-403	24"	24"	1.78 SQFT	ALUMINUM	KYNAR	1, 2, 3

NOTES:
1. CUSTOM COLOR TO BE SELECTED BY ARCHITECT (MATCH ADJACENT SIDING).
2. PROVIDE ALUMINUM BIRDSCREEN.
3. PROVIDE INSTALLATION HARDWARE AS REQUIRED.

RADIANT CEILING PANEL SCHEDULE

					ELECTRICAL			
MARK	SERVES	MANUFACTURER	MODEL	SIZE	WATTS	VOLT/PH	WEIGHT	NOTES:
RCP-A1	BUNKER GEAR STORAGE	MARKEL	CP-127	24"X48"	750	240/1	40	1, 2
RCP-A2	BUNKER GEAR STORAGE	MARKEL	CP-127	24"X48"	750	240/1	40	1, 2
RCP-A3	BUNKER GEAR STORAGE	MARKEL	CP-127	24"X48"	750	240/1	40	1, 2
RCP-A4	DECON	MARKEL	CP-127	24"X48"	750	240/1	40	1, 2,
RCP-A5	DECON	MARKEL	CP-127	24"X48"	750	240/1	40	1, 2
RCP-B1	TOTE/STORAGE	MARKEL	CP-127	24"X48"	750	240/1	40	1, 3

NOTES:
1. PROVIDE LOW VOLTAGE WALL THERMOSTAT WITH RELAY.
2. PROVIDE SURFACE MOUNTING FRAME.
3. PROVIDE T-BAR MOUNTING.

DIFFUSER AND GRILLE SCHEDULE

ITEM	MAKE	MODEL	DESCRIPTION	SIZE	MARK
SUPPLY DIFFUSER	TITUS	MCD	SQUARE FACE/NECK, SURFACE MOUNT FRAME SIZE OR 24"X24" LAY-IN. SIDE INLET PLENUM PER PLANS. 4 ADJ. CORES, STEEL, WHITE ENAMEL	6"X6"	D-1
				8"X8"	D-2
				10"X10"	D-3
				12"X12"	D-4
SUPPLY DIFFUSER	PRICE	SPJD	SQUARE FACE INDUCTION NOZZLES STEEL, WHITE ENAMEL PROVIDE 5"Ø SIDE INLET PLENUM	6"-24"X24"	D-11
OSA SUPPLY DIFFUSER	PRICE	RSD	SQUARE FACE, 24"X24" LAY-IN. CIRCULAR ARRAY, SIDE INLET PLENUM. ADJUSTABLE DISCHARGE PATTERN. STEEL, WHITE W/ BLACK BLADES.	6"-12"x12"	D-21
				8"	D-22
				10"	D-23
OSA SUPPLY DIFFUSER	PRICE	RTD	SQUARE FACE, 24"X24" LAY-IN. HIGH INDUCTION VORTEX PATTERN PROVIDE SIDE INLET PLENUM. STEEL	10"	D-31
				12"	D-32
RETURN GRILLE	TITUS	50F	1/2" EGG CRATE, ALUM., WHITE ENAMEL	12"X24"	G-1
RETURN GRILLE	TITUS	355RL	1/2" BLADE SPACING, 35 DEG DEFLECTION, BLADES PARALLEL TO LONG DIMENSION, STEEL, WHITE	12"X12"	G-11

NOTES:
1. CEILING UNIT FRAME SHALL BE COMPATIBLE WITH CEILINGS; FLAT FRAME SURFACE MOUNT (TITUS BORDER TYPE 1) FOR DRYWALL CEILINGS AND WITH LAY-IN PANEL FOR EXPOSED GRID CEILINGS (TITUS BORDER TYPE 3). SEE ARCHITECTURAL PLANS FOR CEILING TYPES.
2. BEVELED DROP FACE DIFFUSERS (TITUS BORDER TYPE 6) ARE NOT ACCEPTABLE.
3. SIZE INDICATES DUCT COLLAR.

RICE fergus MILLER
ARCHITECTURE INTERIORS PLANNING VIZLAB
275 FIFTH STREET, SUITE 100
BREMERTON, WA 98337
360-377-8773
RFMARCH.COM

SIDER + BYERS
MECHANICAL + ELECTRICAL ENGINEERS
192 Nickerson, Suite #300
Seattle, Washington 98109
Phone: 206.285.2966

STATION 57 ADDITION
GIG HARBOR FIRE AND MEDIC ONE
10521 CRESCENT VALLEY DR. NW
GIG HARBOR, WA 98332

PROJECT # 22043
BID SET
ISSUE DATE JANUARY 8, 2024

REVISION SCHEDULE

AHJ APPROVAL STAMP

SCHEDULES

SHEET #
M00.03

SEQUENCE OF OPERATIONS

1. CONTROL SYSTEM.

   PROVIDE ELECTRIC/ELECTRONIC CONTROLS TO PERFORM FUNCTIONS IN ACCORD WITH THE FOLLOWING.

2. VRFZ SPLIT SYSTEMS: CU-3 & FC-8

   THE FOLLOWING CONTROL BY UNIT MANUFACTURER DIGITAL CONTROL SYSTEM INCLUDED WITH EQUIPMENT.

   TAR-MA ZONE REMOTE CONTROLLERS PROVIDE START/STOP, TEMPERATURE CONTROL & FAN SPEED CONTROL FOR EACH ZONE.

   FAN COIL FANS ARE GENERALLY OFF DURING OCCUPIED MODE AND CYCLE ON HEAT/COOL WHICH MODULATES TO MAINTAIN ROOM SETPOINT. FAN COILS CYCLE DURING UNOCCUPIED SCHEDULE TO MAINTAIN UNOCCUPIED HEAT SETPOINT.

   FAN COILS SCHEDULE OCCUPIED 24/7.

3. ENERGY RECOVERY VENTILATOR: ERV-1

   UNIT CONTROL BY MANUFACTURER'S MICROPROCESSOR CONTROLLER WITH REMOTE WALL MOUNTED INTERFACE.

   ERV-1 SCHEDULE OCCUPIED 24/7.

   ERV-1 OPERATES CONTINUOUSLY IN OCCUPIED MODE. SUPPLY AND EXHAUST FANS OPERATE CONTINUOUSLY DURING OCCUPIED SCHEDULE AND ARE OFF DURING UNOCCUPIED. OUTSIDE AIR AND RELIEF DAMPERS ARE OPEN DURING NORMAL OPERATION AND CLOSED WHEN FANS ARE OFF OR IF UNIT FANS FAIL.

   ELECTRIC PRE-HEATER SCR MODULATES TO PROVIDE INTERNAL FROST PROTECTION.

   SUPPLY FAN SPEED MODULATES SUPPLY AIRFLOW TO MAINTAIN SUPPLY DUCT PRESSURE SETPOINT OF 0.5" W.G. (ADJ). EXHAUST FAN VFD SPEED IS SET FOR CONSTANT VOLUME. INITIAL SETPOINTS SHOULD BE BASED ON MINIMUM SCHEDULED AIRFLOWS AND ADJUSTED DURING BALANCING TO PROVIDE OPTIMAL PERFORMANCE. VERIFY MAXIMUM SUPPLY AIRFLOW IS PROVIDE FOR DEMAND CONTROL VENTILATION / MAKEUP AIR.

   UNIT FANS SHUT DOWN, MOTORIZED DAMPERS CLOSE AND CONTROLS ALARM IF UNIT SUPPLY TEMPERATURE DROPS BELOW 40 F (ADJ).

4. SUPPLY FAN: SF-2 (EXISTING)

   FAN OPERATES CONTINUOUSLY. REBALANCE SYSTEM FOR NEW AIRFLOW.

5. RADIANT CEILING PANELS: RCP

   UNITS OPERATE WITH ELECTRONIC LOW VOLTAGE HEATING ONLY WALL THERMOSTATS WITH RELAYS. SPACE TEMPERATURE SETPOINT OF 60F (ADJ).

6. DECON ROOM 140 MAKEUP AIR:

   DRYER CURRENT SENSOR ACTIVATES 2-POSITION MOTORIZED TROX VFC DAMPER TO PROVIDED ADDITIONAL OUTSIDE (HIGH CFM VALUE) AIR WHEN GEAR DRYER IS IN OPERATION. MOTORIZED TROX PROVIDES MINIMUM OUTSIDE AIR OTHERWISE (LOW CFM VALUE).

7. DOOR SWITCHES FOR HVAC SYSTEM CONTROL

   MAGNETIC DOOR SWITCH ACTIVATES 300 SECOND DELAY TIMER UPON DOOR OPENING. TIMER AUTOMATICALLY RESETS WHEN DOOR CLOSES. WHEN DOOR REMAINS OPEN FOR 300 SECONDS, DEPENDING ON TYPE OF ASSOCIATED HVAC EQUIPMENT:

   A. THE ASSOCIATED HVAC SYSTEM HEATING & COOLING SHUTS DOWN VIA UNIT CONTROL CONTACT (UNIT FAN REMAINS AVAILABLE)
      OR
   B. HEATING & COOLING SIGNAL FROM THERMOSTAT IS INTERRUPTED (UNIT REMAINS POWERED, FAN REMAINS AVAILABLE)
      OR
   C. POWER FOR LINE VOLTAGE CONTROLLED EQUIPMENT IS INTERRUPTED (EQUIPMENT IS OFF).

   WHEN DOOR CLOSES THE ASSOCIATED HVAC SYSTEM SHALL RESUME NORMAL OPERATION.

RICE fergus MILLER
ARCHITECTURE INTERIORS PLANNING VIZLAB
275 FIFTH STREET, SUITE 100
BREMERTON, WA 98337
360-377-8773
RFMARCH.COM

SIDER + BYERS
MECHANICAL + ELECTRICAL ENGINEERS
192 Nickerson, Suite #300
Seattle, Washington 98109
Phone: 206.285.2966

STATION 57 ADDITION
GIG HARBOR FIRE AND MEDIC ONE
10521 CRESCENT VALLEY DR. NW
GIG HARBOR, WA 98332

PROJECT # 22043
BID SET
ISSUE DATE JANUARY 8, 2024

REVISION SCHEDULE		

AHJ APPROVAL STAMP

SEQUENCE OF OPERATIONS

SHEET #
M00.04

GENERAL NOTES:

1. TO FACILITATE NEW ROOFING, REMOVE EXISTING ROOF EQUIPMENT, PRESERVE AND REINSTALL.

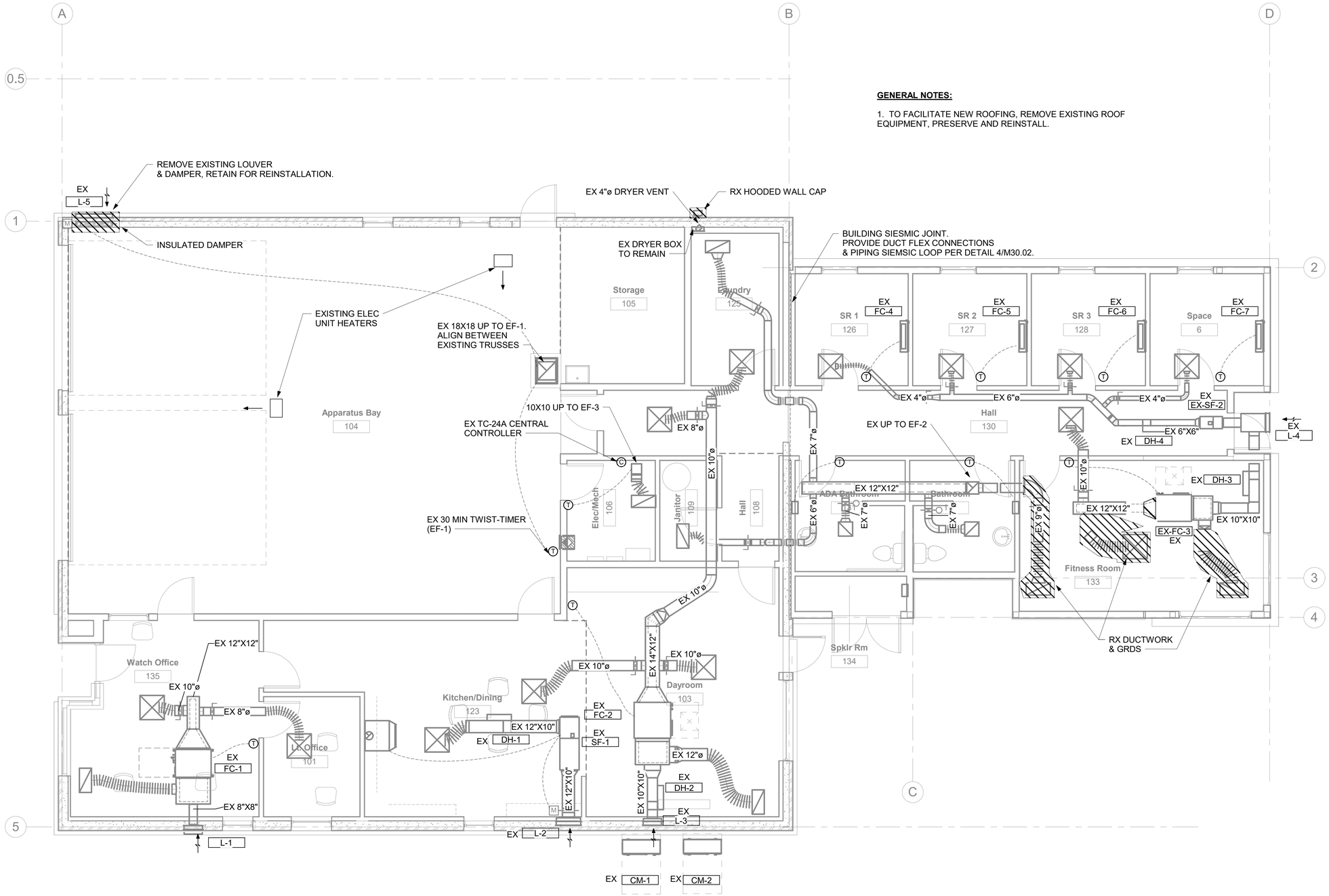

1 DEMOLITION FLOOR PLAN
1/4" = 1'-0"

RICE fergus MILLER
ARCHITECTURE INTERIORS PLANNING VIZLAB
275 FIFTH STREET, SUITE 100
BREMERTON, WA 98337
360-377-8773
RFMARCH.COM

SIDER + BYERS
MECHANICAL + ELECTRICAL ENGINEERS
192 Nickerson, Suite #300
Seattle, Washington 98109
Phone: 206.285.2966

STATION 57 ADDITION
GIG HARBOR FIRE AND MEDIC ONE
10521 CRESCENT VALLEY DR. NW
GIG HARBOR, WA 98332

PROJECT #	22042
BID SET	
ISSUE DATE	JANUARY 8, 2024

REVISION SCHEDULE

AHJ APPROVAL STAMP

DEMOLITION FLOOR PLAN

SHEET #
M20.01

GENERAL NOTES:

1. REFRIGERANT PIPING REPRESENTATION SHOWS ONE LINE FOR EACH PIPE BETWEEN THE CU AND FCS. SEE PIPING SCHEMATIC ON M30.04.

2. PROVIDE EQUIPMENT ANCHORING AND SEISMIC BRACING PER ASCE 7-16.

PLANS NOTES:

(1) PROVIDE DOOR INTERLOCK WITH ZONE FAN COIL. FAN COIL HEATING/COOLING SHALL BE DISABLED WHEN DOOR HAS BEEN OPEN FOR 5 MINUTES. SEE DETAIL 1/M30.04.

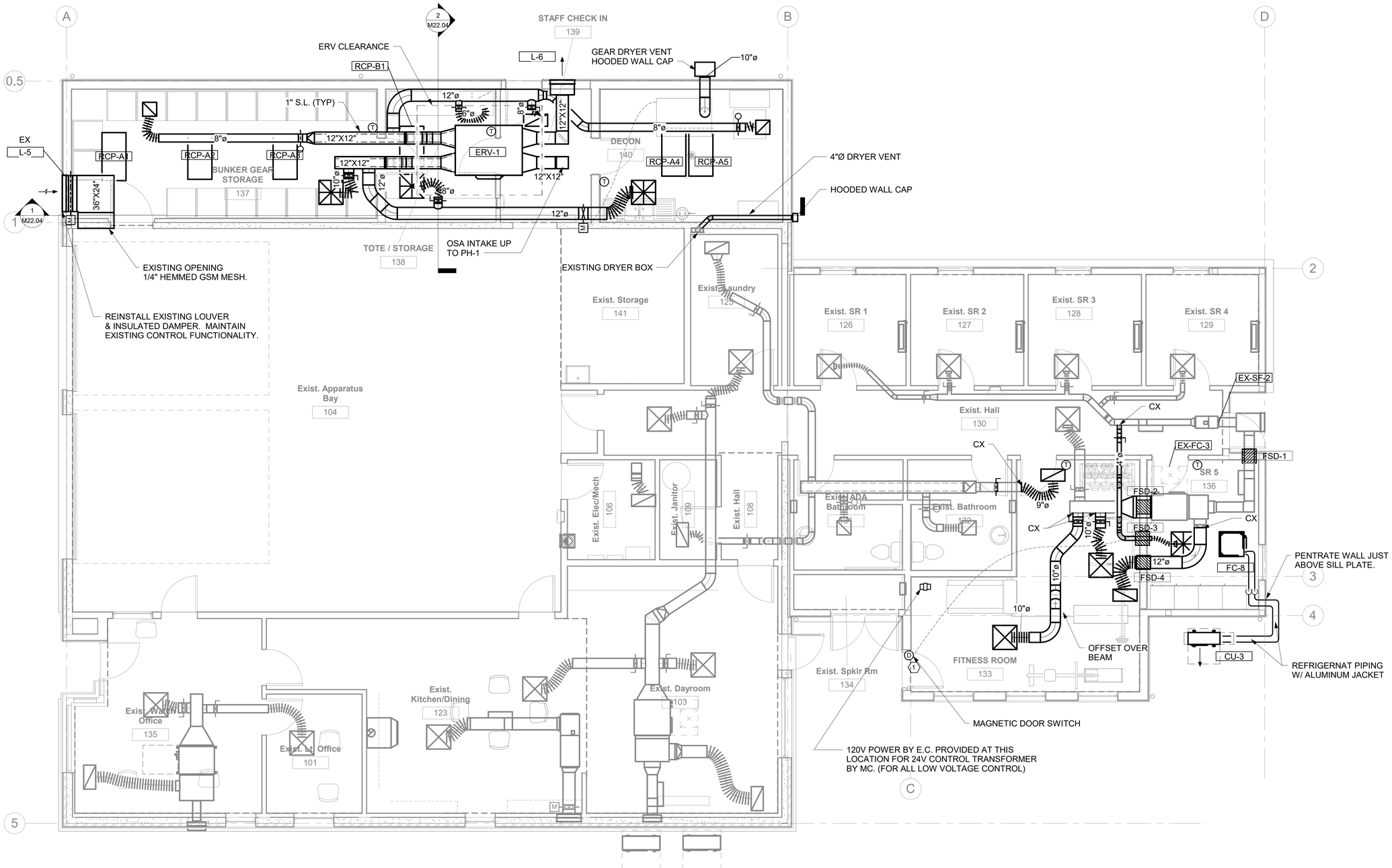

(1) FLOOR PLAN
1/4" = 1'-0"

RICE fergus MILLER
ARCHITECTURE INTERIORS PLANNING VIZLAB
275 FIFTH STREET, SUITE 100
BREMERTON, WA 98337
360-377-8773
RFMARCH.COM

SIDER + BYERS
MECHANICAL + ELECTRICAL ENGINEERS
192 Nickerson, Suite #300
Seattle, Washington 98109
Phone: 206.285.2966

STATION 57 ADDITION
GIG HARBOR FIRE AND MEDIC ONE

10521 CRESCENT VALLEY DR. NW
GIG HARBOR, WA 98332

PROJECT #	22042
BID SET	
ISSUE DATE	JANUARY 8, 2024

REVISION SCHEDULE

AHJ APPROVAL STAMP

FLOOR PLAN

SHEET #
M22.01

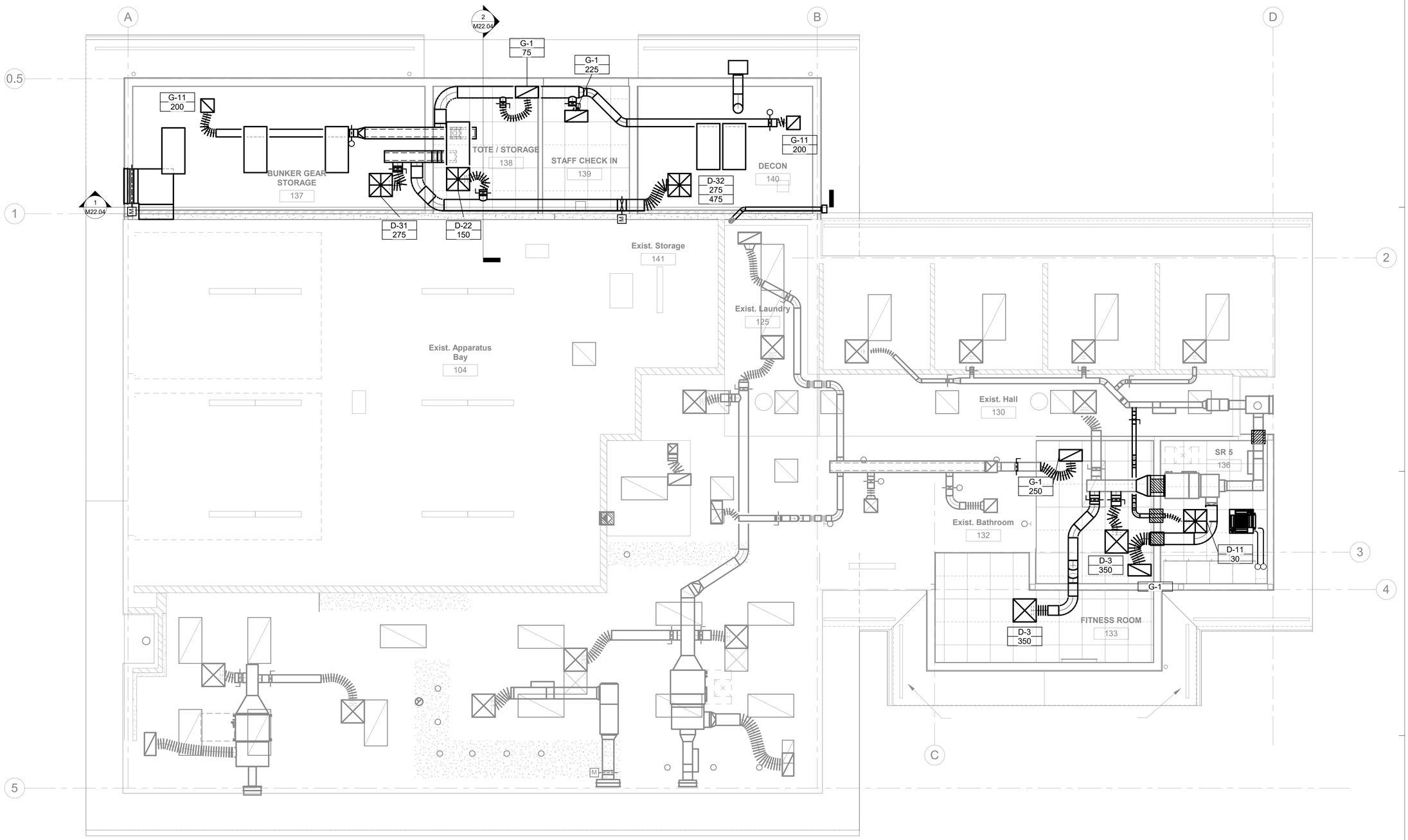

1 RELECTED CEILING PLAN
1/4" = 1'-0"

RICE fergus MILLER
ARCHITECTURE INTERIORS PLANNING VIZLAB
275 FIFTH STREET, SUITE 100
BREMERTON, WA 98337
360-377-8773
RFMARCH.COM

SIDER + BYERS
MECHANICAL + ELECTRICAL ENGINEERS
192 Nickerson, Suite #300
Seattle, Washington 98109
Phone: 206.285.2966

STATION 57 ADDITION
GIG HARBOR FIRE AND MEDIC ONE
10521 CRESCENT VALLEY DR. NW
GIG HARBOR, WA 98332

PROJECT #	22042
BID SET	
ISSUE DATE	JANUARY 8, 2024

REVISION SCHEDULE

AHJ APPROVAL STAMP

CEILING PLAN

SHEET #
M22.02

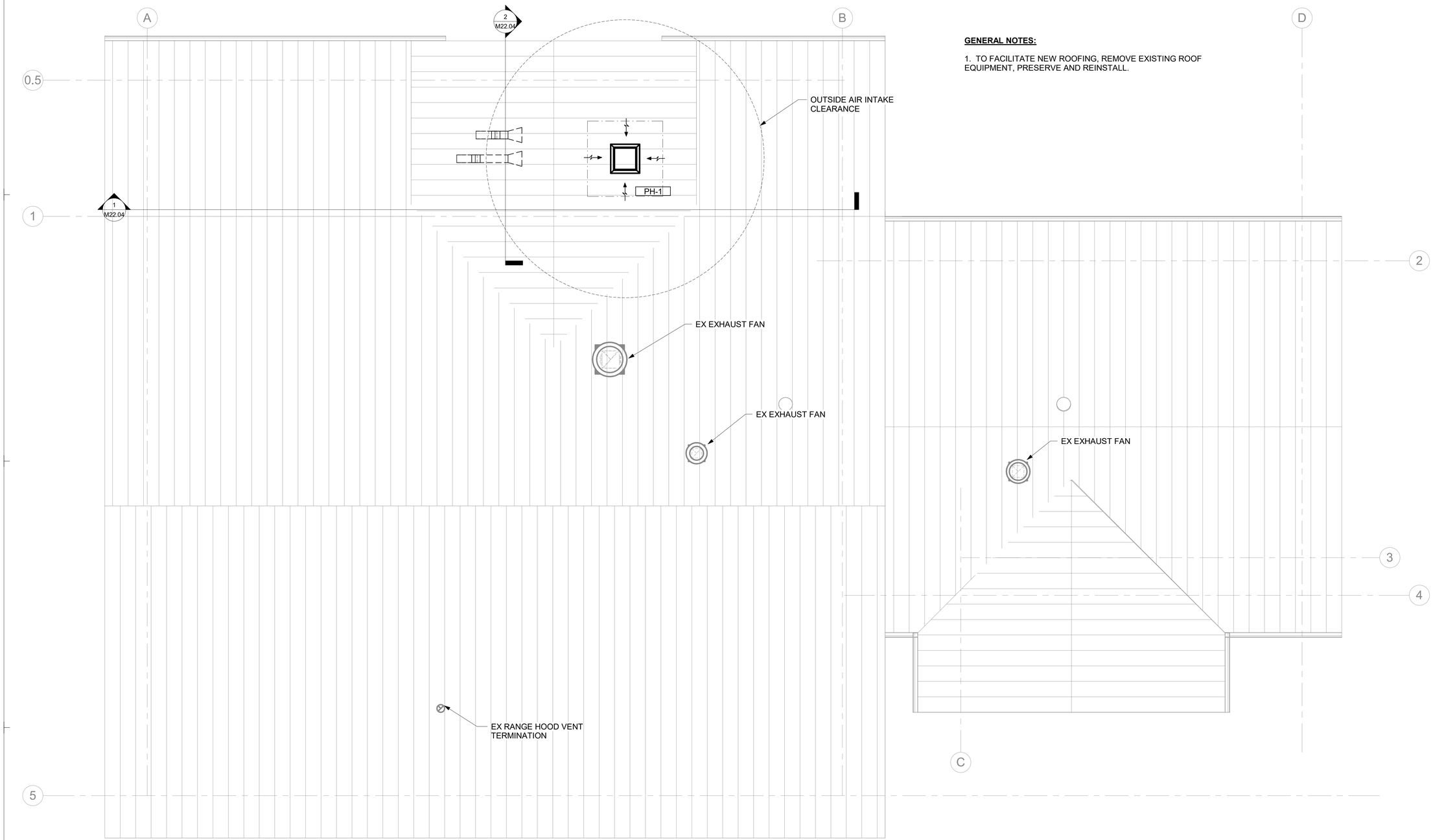

GENERAL NOTES:

1. TO FACILITATE NEW ROOFING, REMOVE EXISTING ROOF EQUIPMENT, PRESERVE AND REINSTALL.

1 ROOF PLAN
1/4" = 1'-0"

RICE fergus MILLER
ARCHITECTURE INTERIORS PLANNING VIZLAB
275 FIFTH STREET, SUITE 100
BREMERTON, WA 98337
360-377-8773
RFMARCH.COM

SIDER + BYERS
MECHANICAL + ELECTRICAL ENGINEERS
192 Nickerson, Suite #300
Seattle, Washington 98109
Phone: 206.285.2966

STATION 57 ADDITION
GIG HARBOR FIRE AND MEDIC ONE
10521 CRESCENT VALLEY DR. NW
GIG HARBOR, WA 98332

PROJECT #	22042
BID SET	
ISSUE DATE	JANUARY 8, 2024

REVISION SCHEDULE

AHJ APPROVAL STAMP

ROOF PLAN

SHEET #
M22.03

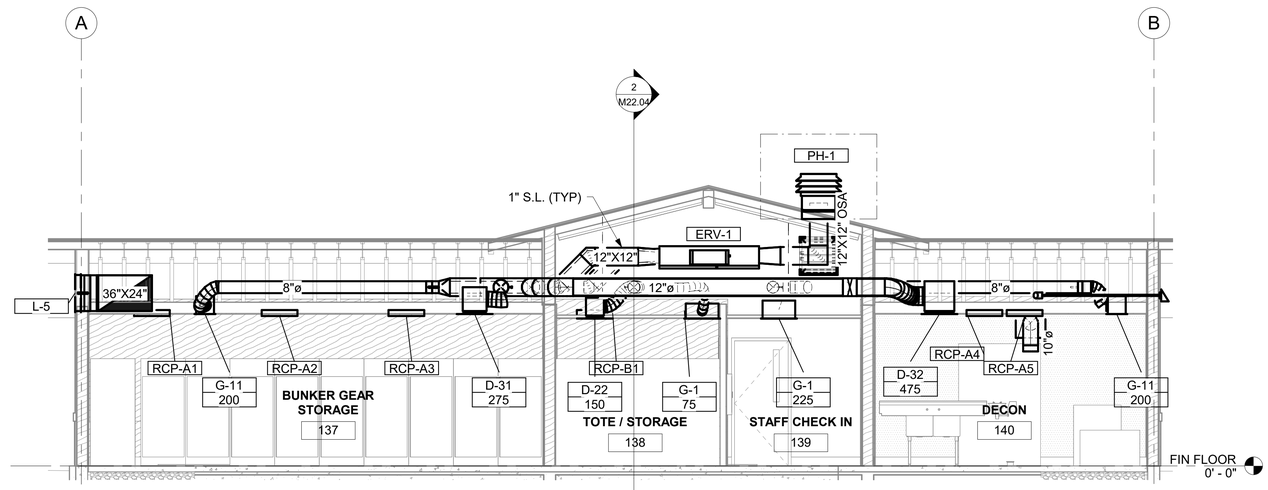

1 ADDITION SECTION
1/4" = 1'-0"

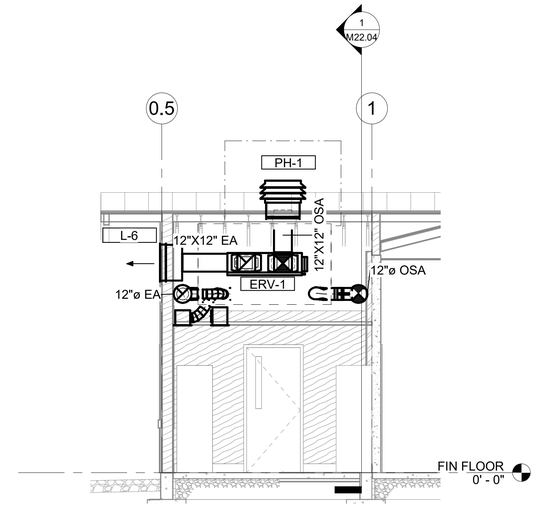

2 ADDITION CROSS SECTION
1/4" = 1'-0"

RICE fergus MILLER
ARCHITECTURE INTERIORS PLANNING VIZLAB
275 FIFTH STREET, SUITE 100
BREMERTON, WA 98337
360-377-8773
RFMARCH.COM

SIDER + BYERS
MECHANICAL + ELECTRICAL ENGINEERS
192 Nickerson, Suite #300
Seattle, Washington 98109
Phone: 206.285.2966

STATION 57 ADDITION
GIG HARBOR FIRE AND MEDIC ONE
10521 CRESCENT VALLEY DR. NW
GIG HARBOR, WA 98332

PROJECT #	22042
BID SET	
ISSUE DATE	JANUARY 8, 2024

REVISION SCHEDULE

AHJ APPROVAL STAMP

SECTIONS

SHEET #
M22.04

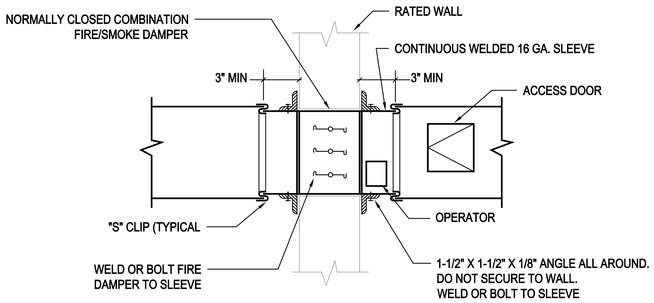

NOTE:

ELECTRICAL POWER CONNECTION REQUIRED COORDINATE W/ ELECTRICAL SECTION OF WORK

1 M30.01 U.L. LISTED COMBINATION FIRE/SMOKE DAMPER

N.T.S.

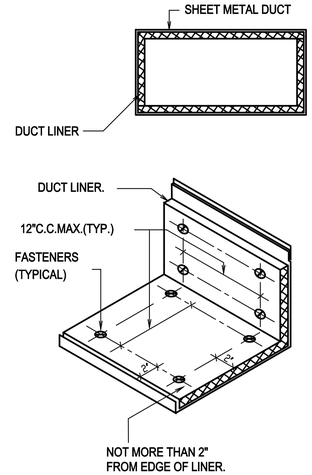

NOTES:

1. PROVIDE S/M NOSING AT EXPOSED EDGES OF INSULATION.
2. ALL TRANSVERSE AND LONGITUDINAL ENDS OF LINER TO BE COATED WITH ADHESIVE.

2 M30.01 DUCT LINER DETAIL

N.T.S.

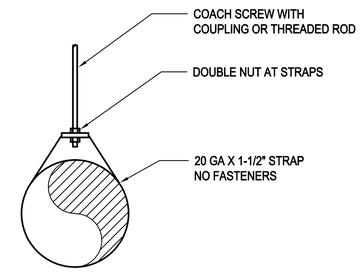

3 M30.01 EXPOSED SPIRAL DUCT HANGING DETAIL

Scale: NONE

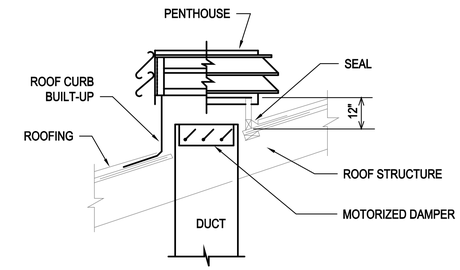

4 M30.01 PENTHOUSE DETAIL

N.T.S.

RICE fergus MILLER
ARCHITECTURE INTERIORS PLANNING VIZLAB
275 FIFTH STREET, SUITE 100
BREMERTON, WA 98337
360-377-8773
RFMARCH.COM

SIDER + BYERS
MECHANICAL + ELECTRICAL ENGINEERS
192 Nickerson, Suite #300
Seattle, Washington 98109
Phone: 206.285.2966

STATION 57 ADDITION
GIG HARBOR FIRE AND MEDIC ONE
10521 CRESCENT VALLEY DR. NW
GIG HARBOR, WA 98332

PROJECT # 22043

BID SET

ISSUE DATE JANUARY 8, 2024

REVISION SCHEDULE

AHJ APPROVAL STAMP

DETAILS

SHEET #
M30.01

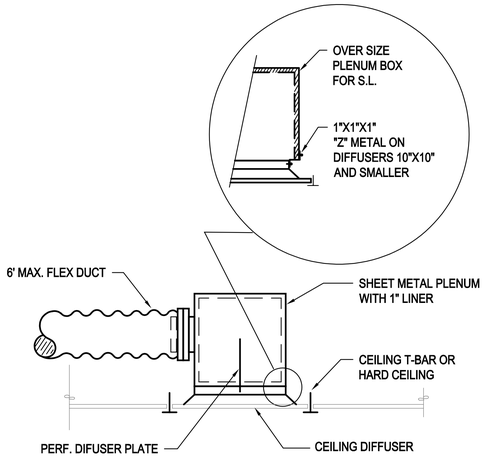

OPTION 1: FOR RECTANGULAR OR ROUND DIFFUSER COLLARS

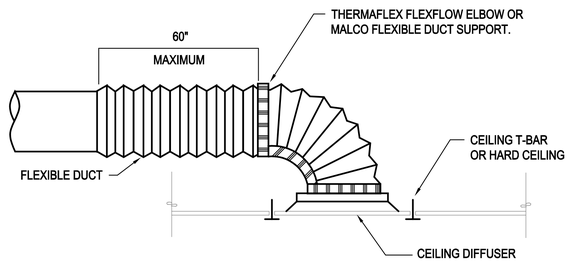

OPTION 2: FOR ROUND DIFFUSER COLLARS ONLY (SPACE PERMITTING)

NOTES:

1. SEE ARCHITECTURAL PLANS FOR CEILING TYPES.
2. SUPPLY SHOWN, DETAIL WITHOUT PERF PLATE IS TYPICAL FOR CEILING RETURN OR EXHAUST GRILLE INSTALLATION.

TYPICAL DIFFUSER DETAIL CEILING INSTALLATION

1 / M30.02 Scale: NONE

NOTE:

MECH. CONTRACTOR TO HIRE THIRD PARTY STRUCTURAL ENGINEER TO PROVIDE EXACT NUMBER AND SIZE OF BOLTS/FASTENERS AND PROVIDE EQUIPMENT SEISMIC CALCULATIONS.

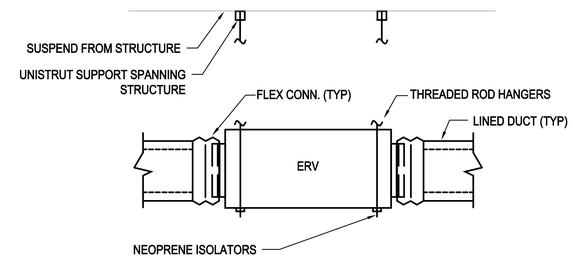

NOTE: PROVIDE SEISMIC BRACING.

INLINE ERV DETAIL

2 / M30.02 Scale: NONE

RICE fergus MILLER
ARCHITECTURE INTERIORS PLANNING VIZLAB
275 FIFTH STREET, SUITE 100
BREMERTON, WA 98337
360-377-8773
RFMARCH.COM

SIDER + BYERS
MECHANICAL + ELECTRICAL ENGINEERS
192 Nickerson, Suite #300
Seattle, Washington 98109
Phone: 206.285.2966

STATION 57 ADDITION
GIG HARBOR FIRE AND MEDIC ONE
10521 CRESCENT VALLEY DR. NW
GIG HARBOR, WA 98332

PROJECT # 22043

BID SET

ISSUE DATE JANUARY 8, 2024

REVISION SCHEDULE

AHJ APPROVAL STAMP

DETAILS

SHEET #
M30.02

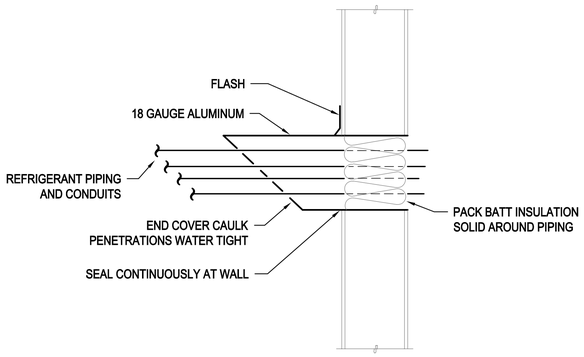

1 M30.03 **WALL PIPE PENETRATION**
N.T.S.

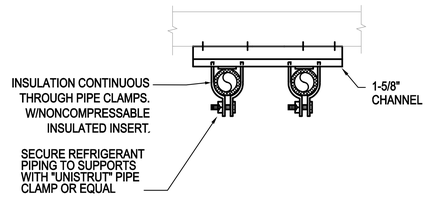

NOTE:
QUANTITY OF PIPES SHOWN REPRESENATIVE ONLY, PROVIDE QUANITY OF PIPES REQUIRED.

2 M30.03 **REFRIGERANT PIPE SUPPORT**
N.T.S.

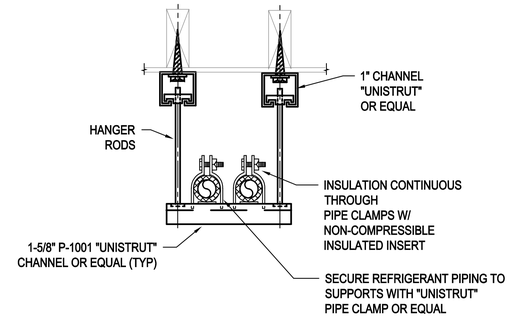

NOTE:

1. QUANTITY OF PIPES SHOWN REPRESENTATIVE ONLY, PROVIDE QUANTITY OF PIPES REQUIRED.

3 M30.03 **SUSPENDED REFRIGERANT PIPE SUPPORT**
N.T.S.

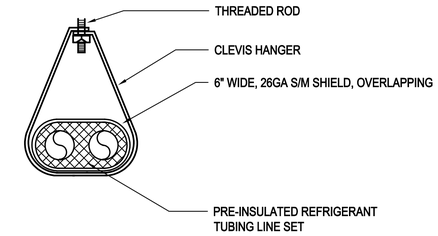

4 M30.03 **REFRIGERANT PIPE SUPPORT**
N.T.S.

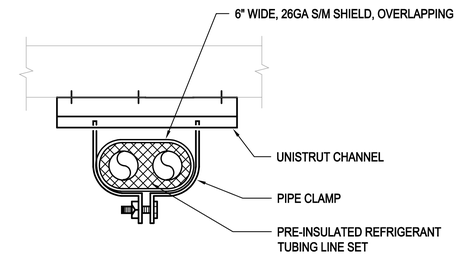

5 M30.03 **REFRIGERANT PIPE SUPPORT**
N.T.S.

NOTES:

1. INSULATE BOTH LIQUID AND VAPORS LINES THROUGH OUT SYSTEM.
2. SECURE OUTDOOR UNIT TO SUPPORT.
3. SIZE REFRIGERANT LINES BASED ON MITSUBISHI SYSTEM CALCULATIONS.
4. VERIFY ROUTING FOR REFRIGERANT PIPING AND CONDENSATE DRAINS.

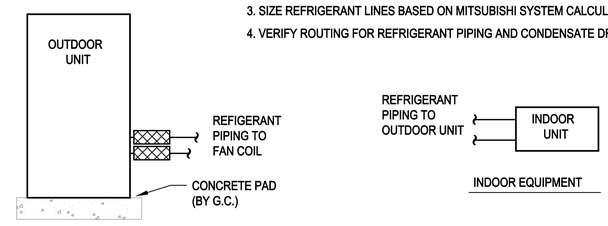

6 M30.03 **HEAT PUMP SYSTEM**
N.T.S.

RICE fergus MILLER
ARCHITECTURE INTERIORS PLANNING VIZLAB
275 FIFTH STREET, SUITE 100
BREMERTON, WA 98337
360-377-8773
RFMARCH.COM

SIDER + BYERS
MECHANICAL + ELECTRICAL ENGINEERS
192 Nickerson, Suite #300
Seattle, Washington 98109
Phone: 206.285.2966

STATION 57 ADDITION
GIG HARBOR FIRE AND MEDIC ONE
10521 CRESCENT VALLEY DR. NW
GIG HARBOR, WA 98332

PROJECT #	22043
BID SET	
ISSUE DATE	JANUARY 8, 2024

REVISION SCHEDULE

AHJ APPROVAL STAMP

DETAILS

SHEET #
M30.03

CITY MULTI

SYSTEM SCHEMATIC DWG.

DIAGRAM SYMBOL LEGEND		CONT.No		PAGE	
DISPLAY	DESCRIPTION				
—//—	POWER WIRE				
———	CONTROL WIRE				
———	REF. PIPE				

PIPING AND CONTROLS		
SYMBOL	LIQUID PIPE/GAS PIPE SIZE	
P1	1/4	3/8

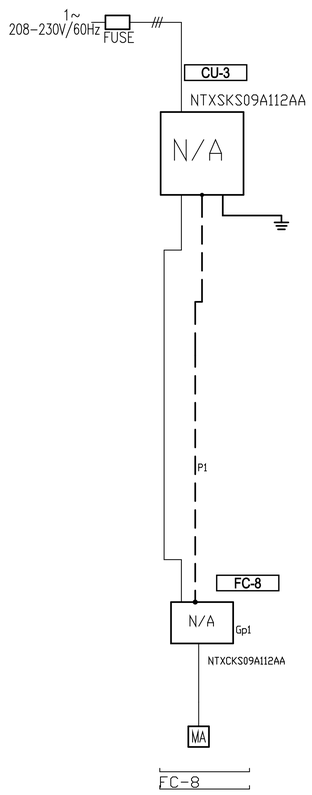

This drawing is schematic in nature. Final routing of piping & wiring shall be determined by the installing contractor and/or designer of record

Additional refrigerant charge is needed depending on the size and length of extended piping. Please refer the amount of pre-charge and the formula of calculation which is mentioned on the data book.

1.25mm²(16 AWG) : 1.25mm²(16 AWG) or more. 0.75mm²(20 AWG) : between 0.5mm²(24 AWG) and 0.75mm²(20 AWG).

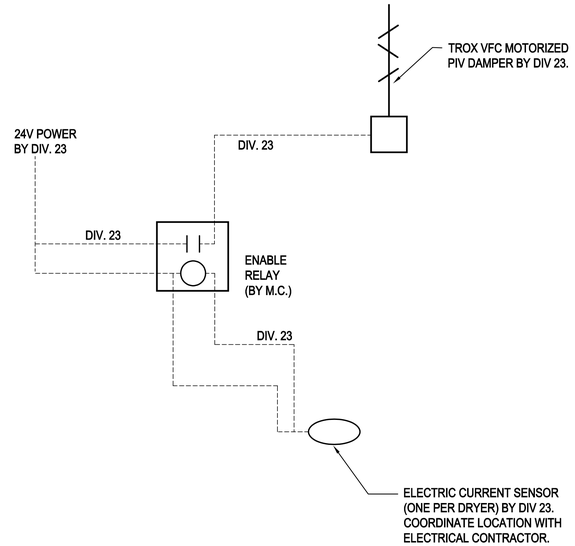

2 M30.04 DRYER MAKEUP AIR CONTROL

N.T.S.

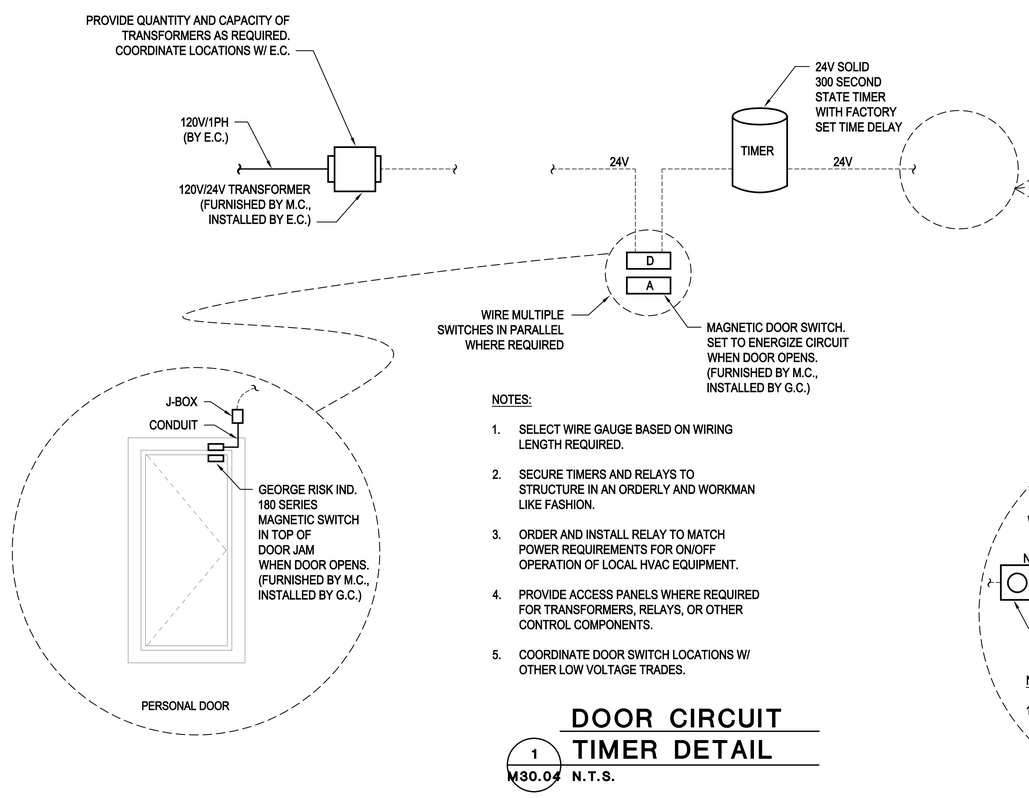

NOTES:

1. SELECT WIRE GAUGE BASED ON WIRING LENGTH REQUIRED.
2. SECURE TIMERS AND RELAYS TO STRUCTURE IN AN ORDERLY AND WORKMAN LIKE FASHION.
3. ORDER AND INSTALL RELAY TO MATCH POWER REQUIREMENTS FOR ON/OFF OPERATION OF LOCAL HVAC EQUIPMENT.
4. PROVIDE ACCESS PANELS WHERE REQUIRED FOR TRANSFORMERS, RELAYS, OR OTHER CONTROL COMPONENTS.
5. COORDINATE DOOR SWITCH LOCATIONS W/ OTHER LOW VOLTAGE TRADES.

1 M30.04 DOOR CIRCUIT TIMER DETAIL

N.T.S.

NOTES:

1. VERIFY WIRING HARNESS ADAPTER AND CONNECTION POINT FOR HEAT/COOL ON/OFF OPERATION.

RICE fergus MILLER
ARCHITECTURE INTERIORS PLANNING VIZLAB
275 FIFTH STREET, SUITE 100
BREMERTON, WA 98337
360-377-8773
RFMARCH.COM

SIDER + BYERS
MECHANICAL + ELECTRICAL ENGINEERS
192 Nickerson, Suite #300
Seattle, Washington 98109
Phone: 206.285.2966

STATION 57 ADDITION
GIG HARBOR FIRE AND MEDIC ONE

10521 CRESCENT VALLEY DR. NW
GIG HARBOR, WA 98332

PROJECT #	22043
BID SET	
ISSUE DATE	JANUARY 8, 2024

REVISION SCHEDULE

AHJ APPROVAL STAMP

DETAILS

SHEET #

M30.04

PLUMBING SYMBOLS LEGEND

LINETYPE LEGEND

- EXISTING
- NEW WORK DARK/HEAVY

PIPING SYSTEM LABELS

- CW — COLD WATER
- HW — HOT WATER
- (140) — HOT WATER (TEMPERATURE)
- HWC — HOT WATER CIRCULATING
- SD — STORM DRAIN
- PW — PUMPED WASTE
- WASTE (BURIED)
- W — WASTE (ABOVE GRADE)
- GW — GREASE WASTE
- V — VENT
- RL — RAINLEADER
- OD — OVERFLOW DRAIN
- NPW — NON-POTABLE COLD WATER
- G OR P — NATURAL GAS OR PROPANE
- F — FIRE SERVICE
- DIRECTION OF FLOW
- CA — COMPRESSED AIR
- DI — DIONIZED WATER
- V — VACUUM
- C — CONDENSATE
- PC — PUMPED CONDENSATE
- X" — SLOPE SYMBOL (X' PER FOOT)

PIPE FITTINGS

- PIPE DOWN
- PIPE UP
- TEE UP
- TEE DOWN
- UNION
- PIPE ANCHOR POINT
- PIPE GUIDE
- FLANGE
- CAP

DRAINS AND CLEANOUTS

- FLOOR SINK
- FLOOR DRAIN
- HIDDEN FLOOR DRAIN
- ROOF DRAIN
- OVERFLOW DRAIN
- FLOOR CLEANOUT
- GRADE CLEANOUT
- TRENCH DRAIN
- WALL CLEANOUT
- UP TO CLEANOUT
- FUNNEL DRAIN
- STANDPIPE FUNNEL DRAIN

PIPE VALVES AND SPECIALTIES

- P-1 — PLUMBING EQUIPMENT
- X — MEDICAL TAG
- M-1 — DETAIL NUMBER / SHEET
- FLAG NOTE
- 1 — REVISION TAG
- 1 / P-1 — PLUMBING RISER NO. / SHEET
- 1 — SECTION NUMBER / SHEET NUMBER

PIPE VALVES AND SPECIALTIES

- GATE VALVE
- GLOBE VALVE
- NON RISING STEM VALVE
- RISING STEM GATE VALVE
- BALANCING VALVE (CIRCUIT SETTER)
- AUTOFLOW VALVE
- CHECK VALVE
- BALL VALVE
- PRESSURE REDUCING VALVE
- SOLENOID VALVE
- PRESSURE GAUGE
- THERMOMETER
- STRAINER
- SAFETY VALVE
- PIPING FLEXIBLE CONNECTIONS
- BUTTERFLY VALVE
- OR — CAP
- HOSE BIBB
- DOUBLE CHECK VALVE
- RPBA
- TRIPLE DUTY VALVE
- BALL VALVE MANUAL LEVER
- GLOBE VALVE MANUAL LEVER
- BALANCE VALVE (PRESSURE INDEPENDENT)
- PUMP
- M — METER
- M — METER

PLUMBING NOTES

PLUMBING FIXTURES SHALL BE DESIGNED OR EQUIPPED TO MEET FOLLOWING MAXIMUM WATER USE EFFICIENCY STANDARDS:

A.	WATER CLOSETS (TANK STYLE OR FLUSH VALVE).	1.28 GPF
B.	SHOWER HEADS	1.8 GPM
C.	RESIDENTIAL LAVATORY FAUCETS.	1.2 GPM
D.	PUBLIC LAVATORY FAUCETS.	0.5 GPM
E.	KITCHEN SINK FAUCETS.	1.8 GPM
F.	SERVICE/LAUNDRY SINK FAUCETS.	2.2 GPM

SINK AND LAVATORY DRAINS SHALL BE CHROME PLATED 17 GA. BRASS TUBING BY ENGINEERED BRASS, DEARBORN BRASS OR BRASSCRAFT.
PROVIDE INSULATED P-TRAP AND SUPPLY COVERS (TRUEBRO OR EQUAL) AT ALL EXPOSED P-TRAPS AND SUPPLIES PER A.D.A. STANDARDS.
PLUMBING FIXTURE MOUNTING SHALL COMPLY WITH CONTRACT DOCUMENTS, ADA, AND WASHINGTON STATE ACCESSIBILITY CODE.
INSTALL WATER HAMMER ARRESTORS ON HOT & COLD WATER PIPING OF EACH FIXTURE GROUP AND AT ALL FIXTURES W/QUICK ACTING VALVES. UNITS SHALL BE ZURN "SHOKTROLL" OR EQUAL. SELECT UNIT SIZE AND LOCATION PER MANUFACTURERS RECOMMENDATIONS AND IN ACCORD WITH PDI STANDARD WH-201. PROVIDE ACCESS PANELS AT ARRESTORS ABOVE GWB CEILINGS. ALL ACCESS PANELS AND DOORS SHALL BE ELMDOR FAB. STEEL SLK SERIES OR EQUAL WITH 14 GAUGE DOOR AND FRAME. PROVIDE WITH CYLINDER LOCK, CONTINUOUS PIANO HINGE AND PRIME COATED READY FOR PAINTING.
COLD WATER AND HOT WATER PIPING SHALL BE INSULATED AND ROUTED FULL SIZE WITH APPROPRIATE SIZE REDUCTION AT POINT OF CONNECTION TO FIXTURE. 1/2" WATER LINE LIMITED TO 10'-0" DISTANCE FROM FIXTURE. "DEAD-LEGS" OR "FUTURE" STUBS ON ACTIVE POTABLE WATER LINES SHALL BE LIMITED TO 4" TO PREVENT STAGNANT WATER CONDITIONS.
INSTALL WATER PIPING ON WARM SIDE OF BUILDING INSULATION. SEE SPEC. FOR INSULATION SYSTEMS. SEE DWGS. FOR ELEC. HEAT TRACE REQUIREMENTS. SEE PLUMBING DETAILS FOR PIPE HANGER STYLE. SEE SPEC. FOR HANGER SPACING.
WHEN CONNECTING TO EXISTING BURIED WASTE PIPING VERIFY PROPER FLOW CONDITIONS BEFORE COVERING. BURIED WASTE & VENT PIPING SHALL BE MIN. 2" DIA. & SLOPED 1/4"/FT., UNLESS OTHERWISE NOTED.
PVC OR ABS PIPING SHALL BE USED ONLY IF APPROVED BY ADMINISTRATIVE AUTHORITY, SEE SPECIFICATIONS FOR FURTHER INFO.
PROVIDE TRAP PRIMERS ON ALL FLOOR DRAINS EXCEPT IN SHOWER STALLS OR OTHERWISE NOTED ON DWGS. CONTRACTOR SHALL INSTALL ACCESS PANELS WHERE PRIMERS ARE CONCEALED IN WALLS.
COORDINATE VENT THROUGH ROOF (VTR) LOCATIONS WITH HVAC UNITS. MAINTAIN MIN. 10'-0" CLEARANCE. OFFSET VTR AS NECESSARY.
COORDINATE PIPE ROUTING WITH HVAC AND SPRINKLER CONTRACTORS.
SITE WATER PRESSURE IS 58 PSI PER ON-SITE PRESSURE GAUGE.
RISER DIAGRAMS & PLANS DO NOT SHOW SOME PIPING OFFSETS REQUIRED FOR STRUCTURAL CLEARANCES. EXACT ROUTING MAY VARY FROM THAT INDICATED. ALL WASTE PIPING INCLUDING RISERS ON RESIDENTIAL LEVELS TO BE CAST IRON.
PROVIDE ELECTRIC HEAT TRACE UNDER PIPING INSULATION FOR ALL WATER PIPING INSTALLED IN UNHEATED GARAGE SPACES.
CONFIGURE PIPING FOR SUDS RELIEF AS REQUIRED BY THE UPC.
ALL LEVER CONTROLLED WATER CLOSETS TO BE INSTALLED WITH THE LEVER ON THE OPEN SIDE OF THE BATHROOM.
PROPANE TANK LOCATIONS SHALL BE VERIFIED BY CONTRACTOR WITH LOCAL GAS SUPPLIER PRIOR TO INSTALLATION OF TANK PAD OR PROPANE PIPING TO/FROM BUILDING. GAS SUPPLIER REQUIRMENTS MAY BE MORE STRICT THAN NFPA 58.

ENERGY CODE NOTES

1. SEE SCHEDULE FOR WATER HEATER EQUIPMENT TYPE, CAPACITY AND EFFICIENCY. MINIMUM EFFICIENCY SHALL MEET TABLE C404.2
2. PUBLIC LAVATORIES SHALL BE EQUIPPED WITH AN ASSE 1070 MIXING VALVE SET TO DELIVERY 110 F HOT WATER.
3. NONCIRCULATING HOT WATER SYSTEMS WITHOUT AN INTEGRAL HEAT TRAP SHALL BE PROVIDED WITH HEAT TRAPS ON THE SUPPLY AND DISCHARGE PIPING.
4. ELECTRIC WATER HEATERS IN UNCONDITIONED SPACES OR ON CONCRETE FLOORS SHALL BE PLACED ON INCOMPRESSIBLE R-10 INSULATION.
5. PROVIDE PIPE INSULATION PER ENERGY CODE SECTION C403.2.9 AND SPECIFICATION SECTION 22 07 00.
6. INSULATION EXPOSED TO WEATHER SHALL BE PROTECTED FROM DAMAGE, SUNLIGHT, MOISTURE AND WIND. PROVIDE JACKET AND ALUMINUM COVERS. ADHESIVE TAPE IS NOT PERMITTED.
7. ALL PIPE AND WRAP INSULATION SHALL BE LABELED WITH ITS THICKNESS AND INSULATING VALUE (R OR K).
8. THE MAXIMUM ALLOWABLE PIPING LENGTH FROM THE NEAREST SOURCE OF HOT WATER TO THE TERMINATION OF THE FIXTURE SUPPLY SHALL COMPLY WITH C404.3
9. CIRCULATING HOT WATER PUMPS OR HEAT TRACE SHALL BE EQUIPPED WITH AUTOMATIC TIMERS.

REFERENCE DESIGN CODES

2018 INTERNATIONAL BUILDING CODE (IBC)
2018 WASHINGTON STATE ENERGY CODE (WSEC)
2018 INTERNATIONAL FIRE CODE (IFC)
2018 INTERNATIONAL MECHANICAL CODE (IMC)
2018 INTERNATIONAL FUEL GAS CODE (IFGC)
2020 NATIONAL ELECTRICAL CODE (NEC)
2018 UNIFORM PLUMBING CODE (UPC)

ABBREVIATIONS

ACT	ACOUSTICAL CEILING TILE	MBH	1000 BRITISH THERMAL UNITS PER HOUR
ADA	AMERICANS WITH DISABILITIES ACT	MED	MEDIUM
ADJ	ADJUSTABLE	MEP	MECHANICAL, ELECTRICAL, PLUMBING
AFF	ABOVE FINISHED FLOOR	MEZZ	MEZZANINE
AFG	ABOVE FINISHED GRADE	MIN	MINIMUM
ALT	ALTERNATE	MISC	MISCELLANEOUS
AP	ACCESS PANEL		
APPROX	APPROXIMATE	N/A	NOT APPLICABLE
ARCH	ARCHITECTURAL/ARCHITECT	NC	NORMALLY CLOSED
AS	AIR SEPARATOR	NEG	NEGATIVE
AUX	AUXILIARY	NIC	NOT IN CONTRACT
		NOM	NOMINAL
BFF	BELOW FINISHED FLOOR	NPC	NON-POTABLE COLD WATER
BFG	BELOW FINISHED GRADE	NPCW	NON POTABLE COLD WATER
BHP	BRAKE HORSE POWER	NPH	NON-POTABLE HOT WATER
BLDG	BUILDING	NPHR	NON-POTABLE HOT WATER RETURN
BOP	BOTTOM OF PIPE	NPT	NATIONAL PIPE THREAD
BTU	BRITISH THERMAL UNIT	NTS	NOT TO SCALE
BTUH	BRITISH THERMAL UNIT PER HOUR		
		OD	OUTSIDE DIAMTER/OVERLOW DRAIN
CA	COMBUSTION AIR	OFCI	OWNER FURNISHED CONTRACTOR INSTALLED
CLG	CEILING	OFOI	OWNER FURNISHED OWNER INSTALLED
CMU	CONCRETE MASONRY UNIT	ORD	OVERFLOW ROOF DRAIN
CO	CLEANOUT	ORL	OVERFLOW RAINWATER LEADER
COND	CONDENSATE		
CW	COLD WATER	ΔP	PRESSURE DIFFERENTIAL
CX	CONNECT TO EXISTING		
		PD	PLANTER DRAIN; PRESSURE DROP
dB	DECIBEL	PERF	PERFORATED
DCVA	DOUBLE CHECK VALVE ASSEMBLY	PH	PHASE
DDCV	DOUBLE DETECTOR CHECK VALVE	PIV	POST INDICATOR VALVE
DDCVA	DOUBLE DETECTOR CHECK VAVLE ASSEMBLY	PLBG	PLUMBING
DF	DRINKING FOUNTAIN	PRESS	PRESSURE
DFU	DRAINAGE FIXTURE UNIT	PRV	PRESSURE REDUCING VALVE
DHW	DOMESTIC HOT WATER	PSF	POUNDS PER SQUARE FOOT
DHWC	DOMESTIC HOT WATER RECIRCULATION	PSI	POUNDS PER SQUARE INCH
Ø OR DIA	DIAMETER	PSIG	POUNDS PER INCH GAUGE
DN	DOWN		
DWG(S)	DRAWING(S)	QTY	QUANTITY
DWV	DRAIN, WASTE, VENT		
		RD	ROOF DRAIN
EA	EACH	REQD	REQUIRED
EEW	EMERGENCY EYEWASH	RL	RAIN WATER LEADER
EFF	EFFICIENCY	RM	ROOM
ELEV	ELEVATION	RPBP	REDUCED PRESSURE BACKFLOW PREVENTER
EQUIP	EQUIPMENT	RPM	REVOLUTIONS PER MINUTE
ES	EMERGENCY SHOWER	RLX	RELOCATE EXISTING
ET	EXPANSION TANK	RV	RELIEF VALVE
EX	EXISTING/EXISTING TO REMAIN	RX	REMOVE EXISTING
EXP	EXPANSION		
		S	SINK
FC	FAIL CLOSED	S	STORM
FCO	FLOOR CLEANOUT	SCFM	STANDARD CUBIC FEET PER MINUT
FD	FLOOR DRAIN	SD	STORM DRAIN
FDC	FIRE DEPARTMENT CONNECTION	SF	SQUARE FOOT
FF	FINISHED FLOOR	SFU	SUPPLY FIXTURE UNIT
FLA	FULL LOAD AMPS	SH	SHOWER
FM	FORCE MAIN	S.O.V.	SHUTOFF VALVE
FO	FAIL OPEN	SPEC	SPECIFICATION
FP	FIRE PROTECTION	S/S, OR SS	STAINLESS STEEL
FPM	FEET PER MINUTE	STD	STANDARD
FPS	FEET PER SECOND	SYM	SYMBOL
FS	FLOOR SINK		
FSZV	FIRE SPRINKLER ZONE VALVE ASSEMBLY	T&P	TEMPERATURE AND PRESSURE RELIEF VALVE
FT	FEET/FOOT	TBD	TO BE DETERMINED
FTG	FOOTING	TD	TRENCH DRAIN
FV	FLUSH VALVE	TEMP	TEMPERATURE
		TOB	TOP OF BEAM
G	NATURAL GAS	TOC	TOP OF CONCRETE
GA	GAUGE	TOD	TOP OF DECK
GAL	GALLON	TOJ	TOP OF JOIST
G.C.	GENERAL CONTRACTOR	TOS	TOP OF SLAB/TOP OF STEEL
GCO	GRADE CLEANOUT	TP	TRAP PRIMER
GD	GARAGE DRAIN	T&P	TEMPERATURE & PRESSURE
GPF	GALLONS PER FLUSH	TYP	TYPICAL
GPH	GALLONS PER HOUR		
GPM	GALLONS PER MINUTE	UL	UNDERWRITERS LABORATORY
GW	GREASE WASTE	UNO	UNLESS NOTED OTHERWISE
		UR	URINAL
H	HEIGHT		
HB	HOSE BIBB	V	VENT(S)
HBVB	HOSE BIBB VACUUM BREAKER	V	VOLT
HD	HEAD	VERT	VERTICAL
HP	HORSEPOWER	VFD	VARIABLE FREQUENCY DRIVE
HS	HAND SINK	VIB	VALVE-IN-BOX
HW	HOT WATER	VTR	VENT THROUGH ROOF
HX	HEAT EXCHANGER		
		W	WASTE/WATER
IE	INVERT ELEVATION	W/	WITH
IN	INCH/INCHES	W/IN	WITHIN
		W/O	WITHOUT
KW	KILOWATT/KILOWATTS	WC	WATER CLOSET
		WCO	WALL CLEANOUT
LAV	LAVATORY	WH	WATER HEATER
LBS	POUNDS	WPD	WATER PRESSURE DROP
LF	LINEAL FOOT	WT	WEIGHT
LTG	LIGHTING		
LWT	LEAVING WATER TEMPERATURE	YCO	YARD CLEANOUT

RICE fergus MILLER
ARCHITECTURE INTERIORS PLANNING VIZLAB
275 FIFTH STREET, SUITE 100
BREMERTON, WA 98337
360-377-8773
RFMARCH.COM

SIDER + BYERS
MECHANICAL + ELECTRICAL ENGINEERS
192 Nickerson, Suite #300
Seattle, Washington 98109
Phone: 206.285.2966

STATION 57 ADDITION
GIG HARBOR FIRE AND MEDIC ONE
10521 CRESCENT VALLEY DR. NW
GIG HARBOR, WA 98332

PROJECT # 22043
BID SET
ISSUE DATE JANUARY 8, 2024

REVISION SCHEDULE		

AHJ APPROVAL STAMP

COVER SHEET

SHEET #
P00.01

PLUMBING FIXTURE SCHEDULE

MARK	ITEM	MFR: MODEL	DESCRIPTION
S-3	SINK (DECON)	ELKAY: WNSF8230LR2	78" LONG X 27-1/2" DEEP, 14 GAUGE SS SCULLERY SINK, 2 COMPARTMENT, FULL LENGTH 8" HIGH BACKSPLASH, COMPARTMENT DIMENSIONS 15" X 24" X 14", 24" DRAIN BOARD ON LEFT & RIGHT, TUBULAR LEGS, 1/4" RADIUS COVED CORNERS, 2 HOLES ON 8" CENTERS
	FAUCET	T & S BRASS: B-0133-ADF14-B	WALL MOUNTED FITTING, 14" SWING SPOUT, INDEXED LEVER HANDLES, 8" CTRS., PRE-RINSE FAUCET RUBBER HOSE & SPRAY VALVE.
	DRAIN	ELKAY: LK25RT	2" DIAMETER TAILPIECE, ROTARY LEVER OPERATED DRAIN OUTLET
EW	EMERGENCY EYE WASH	HAWS: 7260BT	WALL MOUNTED, ABS PLASTIC HEADS, 2.5 GPM FLOW CONTROLS, FLAG PUSH ACTIVATION, UNIVERSAL EMERGENCY SIGN. PROVIDE WITH HAWS PREPACKAGED TEMPERED WATER SYSTEM MODEL 9201EFE. MOUNT EYEWASH ON WALL TO THE LEFT OF BOWL IN LOCATION THAT DOES NOT CONFLICT WITH FAUCET AND ALLOWS HEADS TO BE ABOVE BOWL WHEN PULLED DOWN FOR USE. REFER TO ARCHITECTURAL DRAWINGS FOR EXACT LOCATION.
FD-2	FLOOR DRAIN	ZURN: Z415-BZ1	2" C.I. BODY, 5" DIAMETER NICKEL BRONZE STRAINER, PROVIDE TRAP PRIMER OR TRAP SEAL DEVICE (ONLY IF ALLOWED BY AHJ) **REFER TO FLOOR DRAIN DETAIL FOR DRAIN CONST. &/OR COVERING.**
TD-1	TRENCH DRAIN	ZURN Z874-12-E1-U4-DGC	12" WIDE X 72" LONG X 12" DEEP SECTIONAL DRAIN. HIGH-DENSITY COMPOSITE CONST. W/ HEAVY-DUTY STEEL TOP FRAME & DUCTILE IRON SLOTTED GRATE, BOTTOM OUTLET CONNECTION. PROVIDE OPENING IN GRATE FOR EXTRACTOR DRAIN.

PLUMBING FIXTURE CONNECTION SCHEDULE

MARK	FIXTURE	PIPE SIZE C.W	H.W	WASTE	VENT	WATER FIXTURE UNITS	WASTE FIXTURE UNITS	REMARKS
S-3	SINK	1/2"	1/2"	2"	1-1/2"	2	2	DECON SINK
EW	EYEWASH	1/2"	-	1-1/2"	1-1/2"	1	2	WALL-MOUNTED
FD-1	FLOOR DRAIN	-	-	2"	1-1/2"	-	2	
TD-1	TRENCH DRAIN	-	-	4"	2"	-	2	

RICE fergus MILLER
ARCHITECTURE INTERIORS PLANNING VIZLAB
275 FIFTH STREET, SUITE 100
BREMERTON, WA 98337
360-377-8773
RFMARCH.COM

SIDER + BYERS
MECHANICAL + ELECTRICAL ENGINEERS
192 Nickerson, Suite #300
Seattle, Washington 98109
Phone: 206.285.2966

STATION 57 ADDITION
GIG HARBOR FIRE AND MEDIC ONE
10521 CRESCENT VALLEY DR. NW
GIG HARBOR, WA 98332

PROJECT # 22043

BID SET

ISSUE DATE JANUARY 8, 2024

REVISION SCHEDULE

AHJ APPROVAL STAMP

SCHEDULES

SHEET #
P00.02

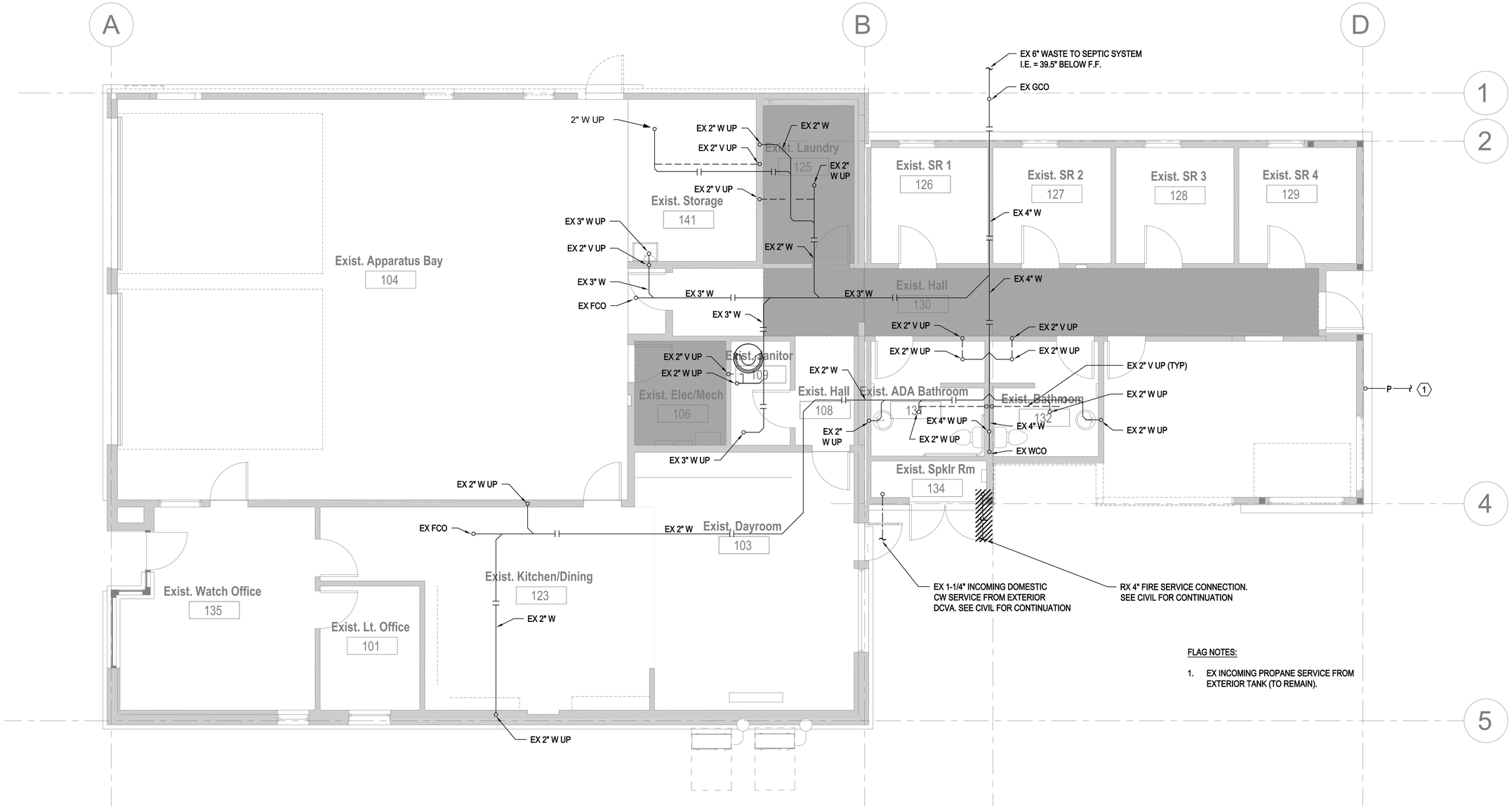

FLAG NOTES:

1. EX INCOMING PROPANE SERVICE FROM EXTERIOR TANK (TO REMAIN).

EXISTING FOUNDATION PLAN

SCALE: 1/4"=1'-0'

RICE fergus MILLER
ARCHITECTURE INTERIORS PLANNING VIZLAB
275 FIFTH STREET, SUITE 100
BREMERTON, WA 98337
360-377-8773
RFMARCH.COM

SIDER + BYERS
MECHANICAL + ELECTRICAL ENGINEERS
192 Nickerson, Suite #300
Seattle, Washington 98109
Phone: 206.285.2966

STATION 57 ADDITION
GIG HARBOR FIRE AND MEDIC ONE

10521 CRESCENT VALLEY DR. NW
GIG HARBOR, WA 98332

PROJECT #	22043
BID SET	
ISSUE DATE	JANUARY 8, 2024

REVISION SCHEDULE

AHJ APPROVAL STAMP

EXISTING FOUNDATION PLAN

SHEET #
P20.00

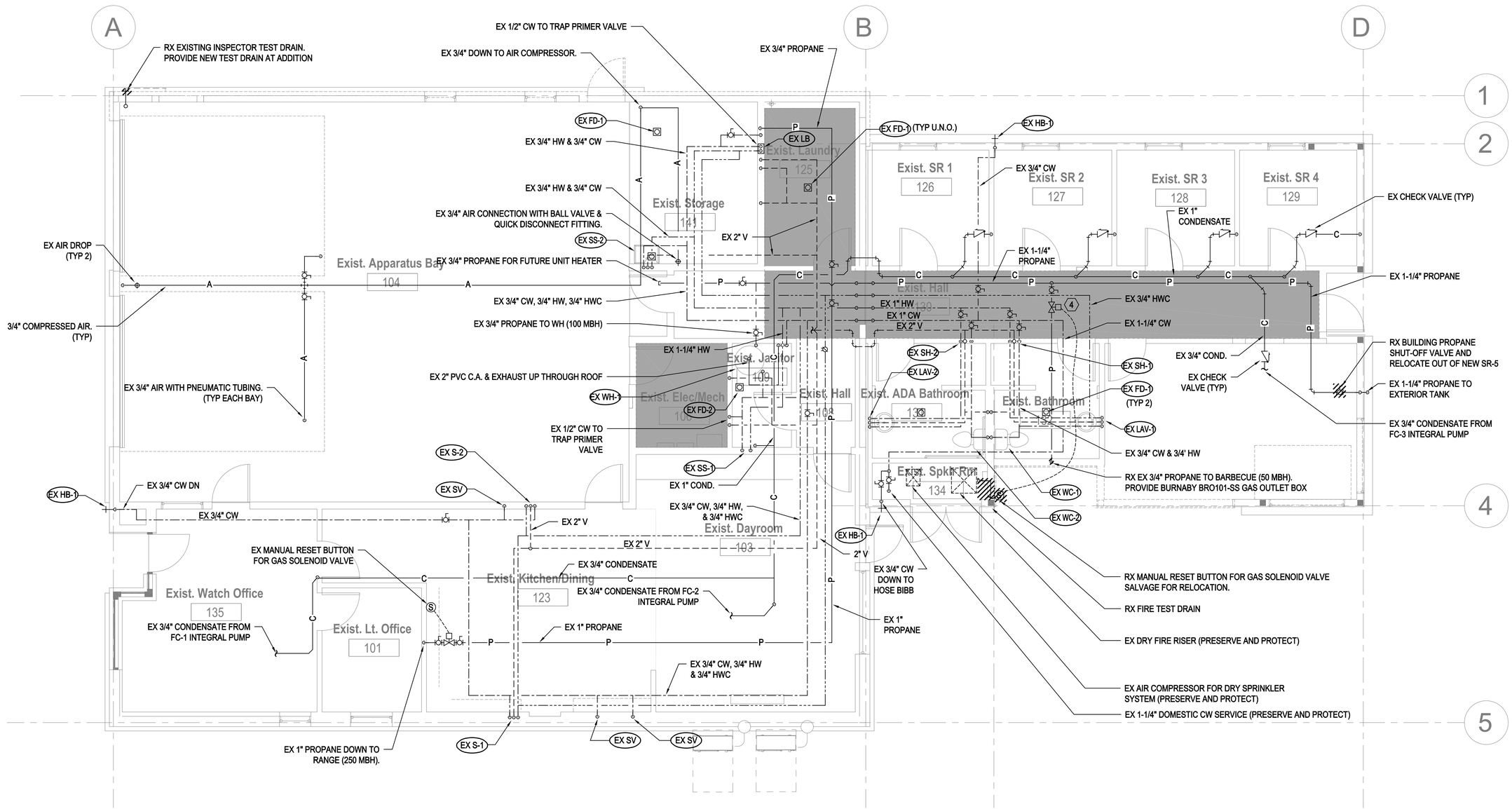

DEMOLITION FLOOR PLAN

SCALE: 1/4"=1'-0'

RICE fergus MILLER
ARCHITECTURE INTERIORS PLANNING VIZLAB
275 FIFTH STREET, SUITE 100
BREMERTON, WA 98337
360-377-8773
RFMARCH.COM

SIDER + BYERS
MECHANICAL + ELECTRICAL ENGINEERS
192 Nickerson, Suite #300
Seattle, Washington 98109
Phone: 206.285.2966

STATION 57 ADDITION
GIG HARBOR FIRE AND MEDIC ONE

10521 CRESCENT VALLEY DR. NW
GIG HARBOR, WA 98332

PROJECT #	22043
BID SET	
ISSUE DATE	JANUARY 8, 2024

REVISION SCHEDULE

AHJ APPROVAL STAMP

DEMOLITION FLOOR PLAN

SHEET #
P20.01

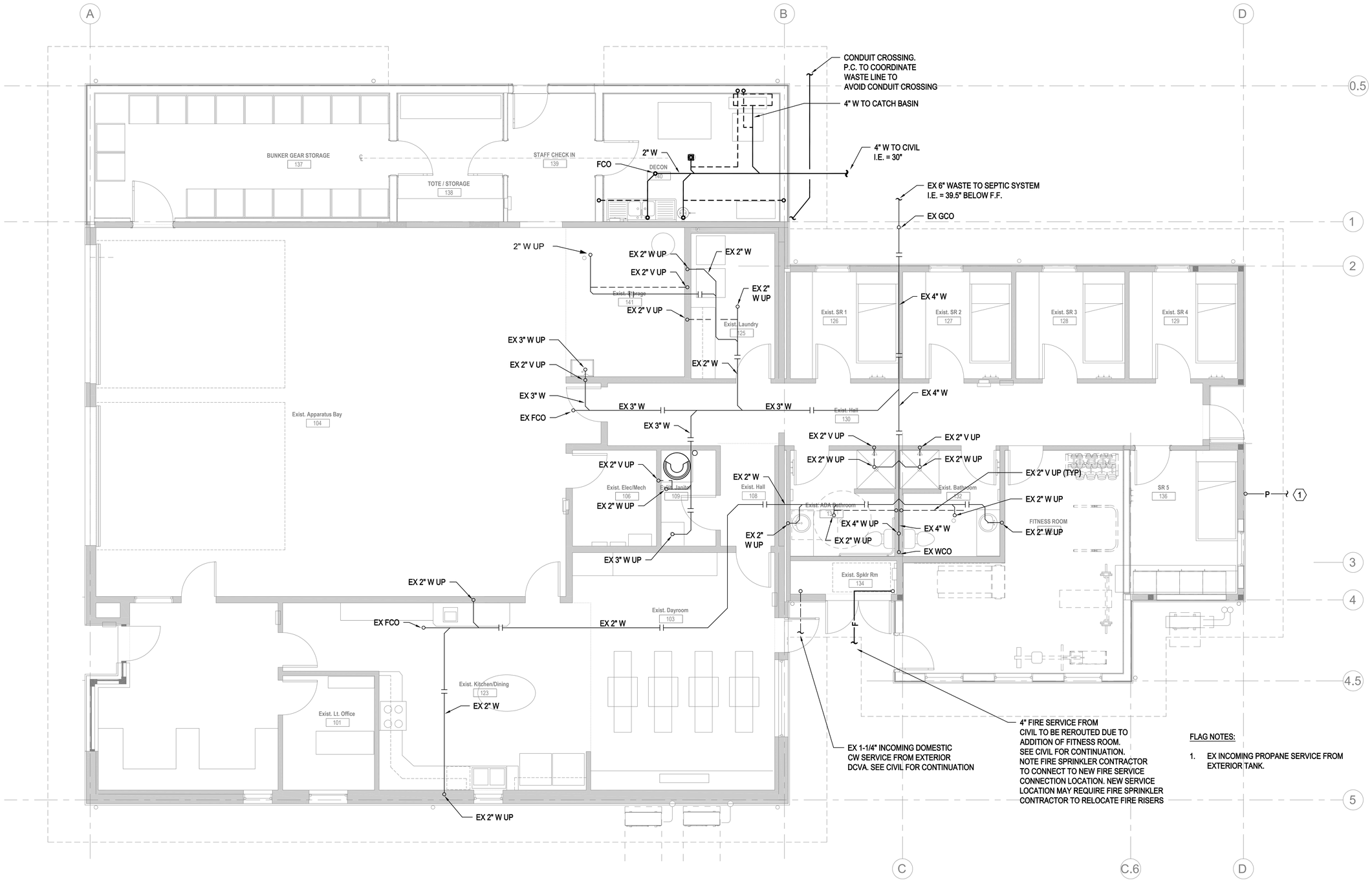

FLAG NOTES:

1. EX INCOMING PROPANE SERVICE FROM EXTERIOR TANK.

FOUNDATION PLAN

SCALE: 1/4"=1'-0'

RICE fergus MILLER
ARCHITECTURE INTERIORS PLANNING VIZLAB
275 FIFTH STREET, SUITE 100
BREMERTON, WA 98337
360-377-8773
RFMARCH.COM

SIDER + BYERS
MECHANICAL + ELECTRICAL ENGINEERS
192 Nickerson, Suite #300
Seattle, Washington 98109
Phone: 206.285.2966

STATION 57 ADDITION
GIG HARBOR FIRE AND MEDIC ONE

10521 CRESCENT VALLEY DR. NW
GIG HARBOR, WA 98332

PROJECT #	22043
BID SET	
ISSUE DATE	JANUARY 8, 2024

REVISION SCHEDULE

AHJ APPROVAL STAMP

FOUNDATION PLAN

SHEET #

P22.00

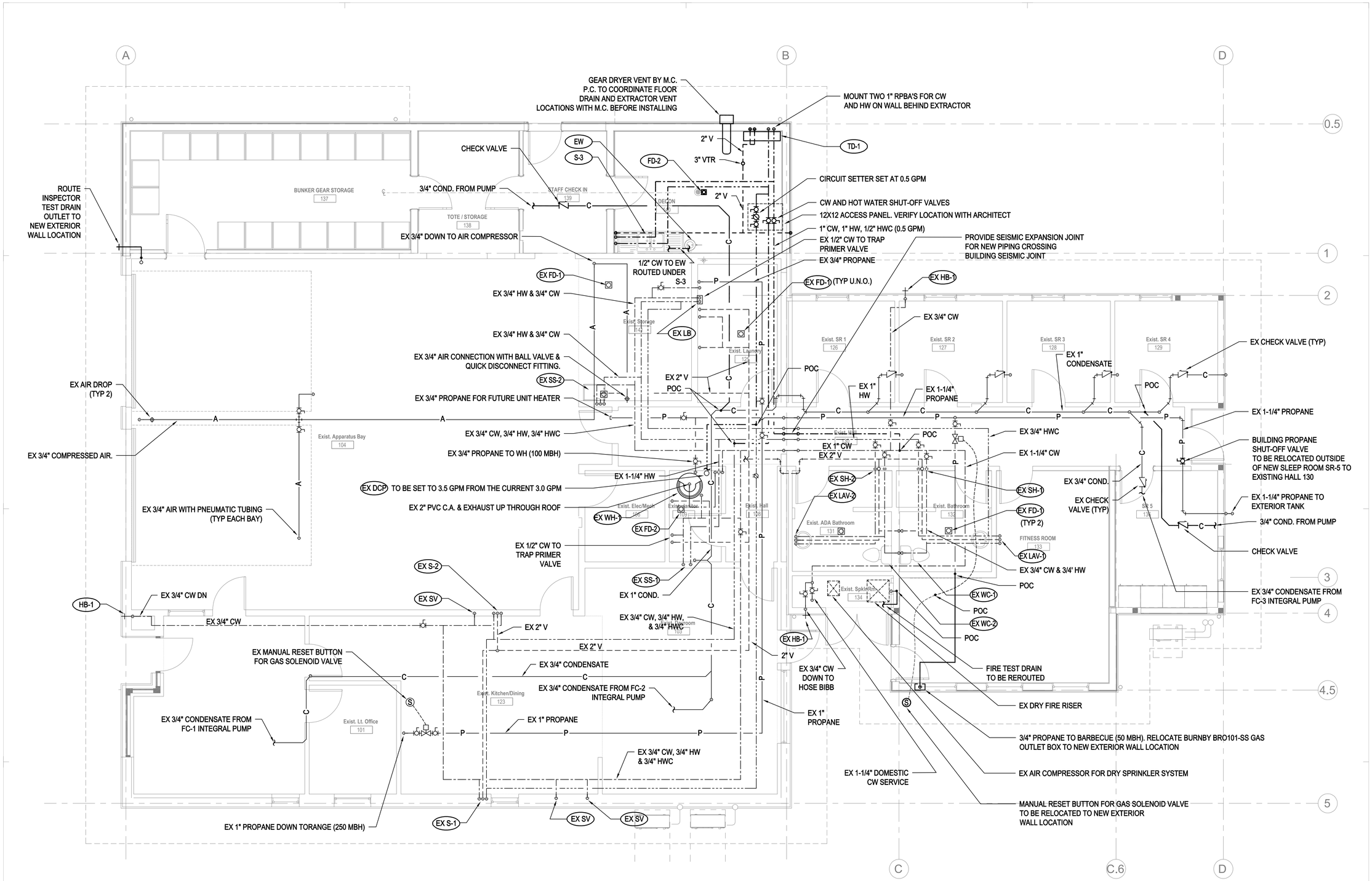

FLOOR PLAN

SCALE: 1/4"=1'-0'

RICE fergus MILLER
ARCHITECTURE INTERIORS PLANNING VIZLAB
275 FIFTH STREET, SUITE 100
BREMERTON, WA 98337
360-377-8773
RFMARCH.COM

SIDER + BYERS
MECHANICAL + ELECTRICAL ENGINEERS
192 Nickerson, Suite #300
Seattle, Washington 98109
Phone: 206.285.2966

STATION 57 ADDITION
GIG HARBOR FIRE AND MEDIC ONE

10521 CRESCENT VALLEY DR. NW
GIG HARBOR, WA 98332

PROJECT #	22043
BID SET	
ISSUE DATE	JANUARY 8, 2024

REVISION SCHEDULE

AHJ APPROVAL STAMP

FLOOR PLAN

SHEET #

P22.01

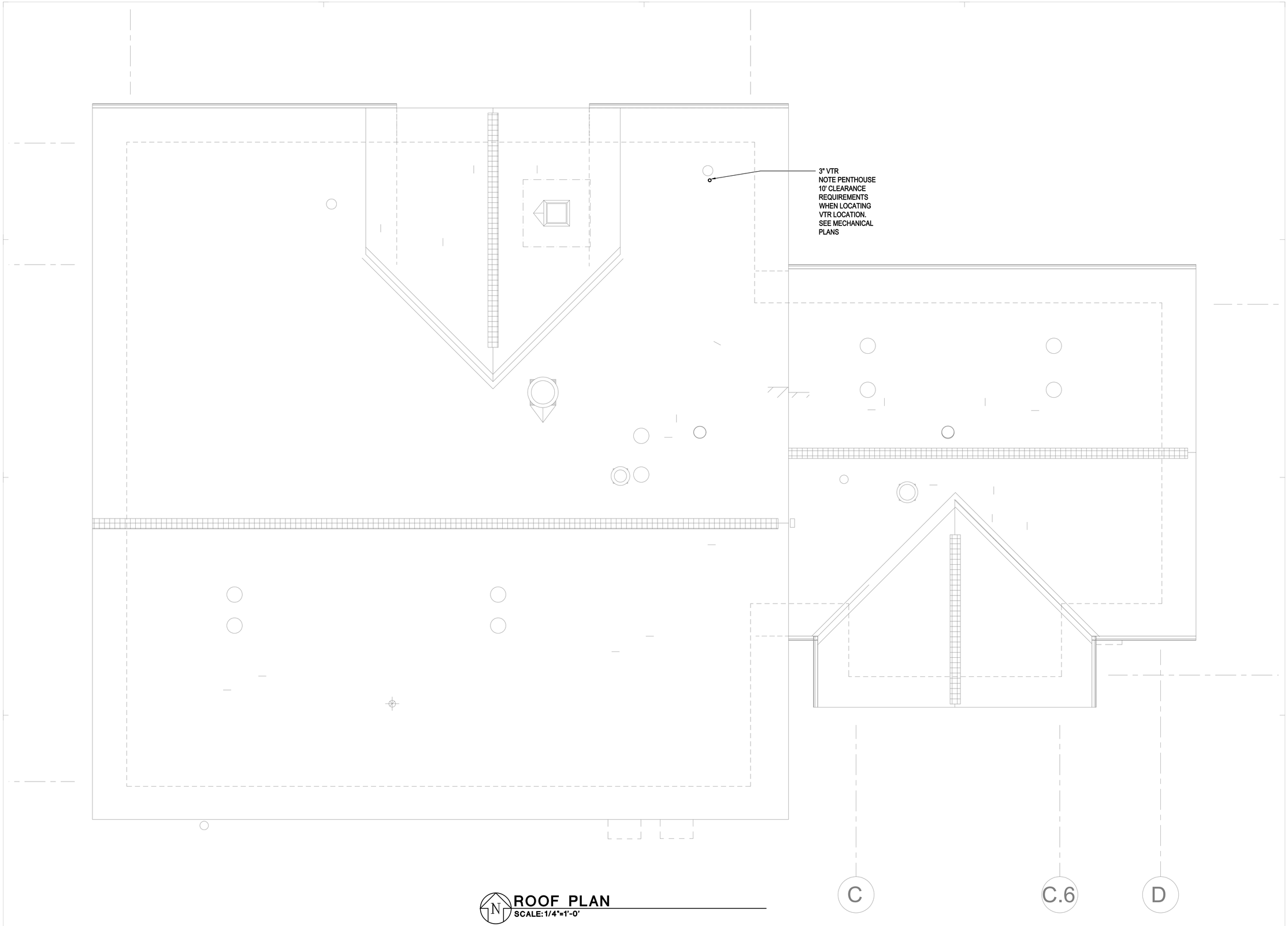

ROOF PLAN
SCALE: 1/4"=1'-0'

RICE fergus MILLER
ARCHITECTURE INTERIORS PLANNING VIZLAB
275 FIFTH STREET, SUITE 100
BREMERTON, WA 98337
360-377-8773
RFMARCH.COM

SIDER + BYERS
MECHANICAL + ELECTRICAL ENGINEERS
192 Nickerson, Suite #300
Seattle, Washington 98109
Phone: 206.285.2966

STATION 57 ADDITION
GIG HARBOR FIRE AND MEDIC ONE
10521 CRESCENT VALLEY DR. NW
GIG HARBOR, WA 98332

PROJECT #	22043
BID SET	
ISSUE DATE	JANUARY 8, 2024

REVISION SCHEDULE

AHJ APPROVAL STAMP

ROOF PLAN

SHEET #
P22.02

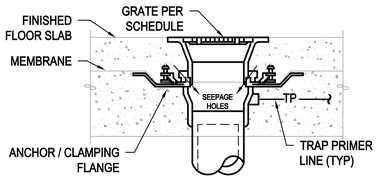

A CONCRETE INSTALLATION W/ MEMBRANE

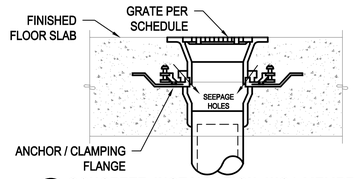

B CONCRETE INSTALLATION WO/ MEMBRANE

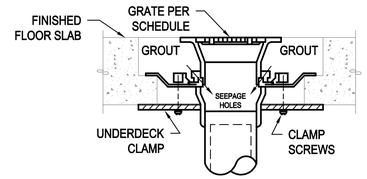

C CONCRETE INSTALLATION W/ CLAMPING RING

NOTES:

1. VERIFY FLOORING CONSTRUCTION BEFORE ORDERING DRAINS.
2. FLOOR DRAINS SHALL BE FLUSH TO 1/4" BELOW FINISHED FLOOR. FLOOR SINKS SHALL BE 1/2" ABOVE TO 1/4" BELOW FINISHED FLOOR. VERIFY WITH LOCAL PLUMBING INSPECTOR.

1 P30.01 FLOOR DRAIN / SINK INSTALLATION STYLES

N.T.S.

NOTES:

1. PROVIDE TRAP PRIMERS ON ALL FLOOR DRAINS & FLOOR SINKS EXCEPT SHOWER DRAINS OR WHERE OTHERWISE NOTED.
2. PRIMER VALVE EXPOSED IN MECHANICAL ROOM OR JANITOR CLOSET & CONCEALED BEHIND ACCESS PANEL IN OTHER AREAS.

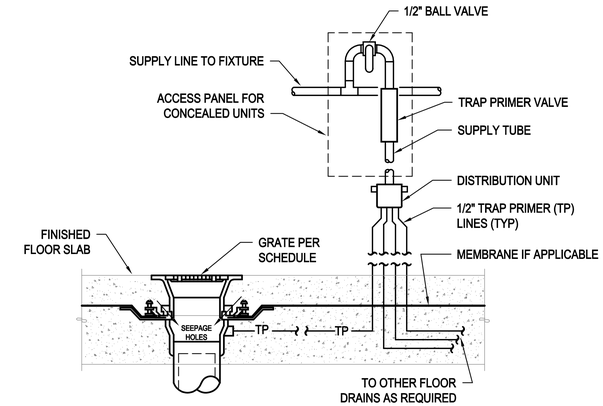

2 P30.01 TRAP PRIMER DETAIL

N.T.S.

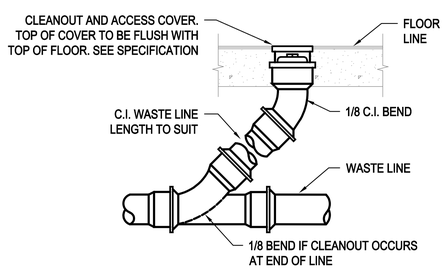

NOTE:

1. FOR GRADE CLEANOUTS (GCO) IN VEHICULAR TRAFFIC AREAS, PROVIDE ACCESS HOUSING EQUAL TO WADE #8300 MF-39.

3 P30.01 FLOOR CLEANOUT DETAIL

N.T.S.

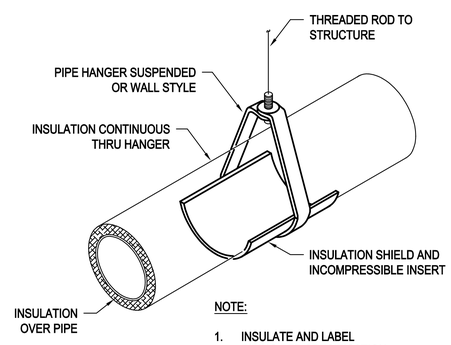

NOTE:

1. INSULATE AND LABEL PIPING PER SPECIFICATION

4 P30.01 PIPE HANGER DETAIL

N.T.S.

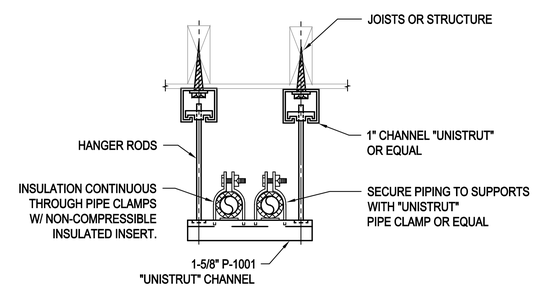

NOTE:

1. QUANTITY OF PIPES SHOWN REPRESENTATIVE ONLY, PROVIDE QUANTITY OF PIPES REQUIRED.

5 P30.01 SUSPENDED PIPE SUPPORT

N.T.S.

RICE fergus MILLER
ARCHITECTURE INTERIORS PLANNING VIZLAB
275 FIFTH STREET, SUITE 100
BREMERTON, WA 98337
360-377-8773
RFMARCH.COM

SIDER + BYERS
MECHANICAL + ELECTRICAL ENGINEERS
192 Nickerson, Suite #300
Seattle, Washington 98109
Phone: 206.285.2966

STATION 57 ADDITION
GIG HARBOR FIRE AND MEDIC ONE
10521 CRESCENT VALLEY DR. NW
GIG HARBOR, WA 98332

PROJECT #	22043
BID SET	
ISSUE DATE	JANUARY 8, 2024

REVISION SCHEDULE

AHJ APPROVAL STAMP

DETAILS

SHEET #
P30.01

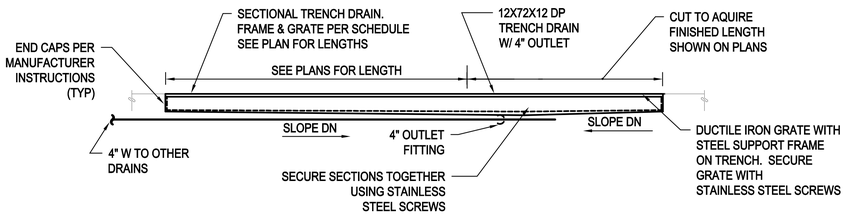

NOTE:

1. PROVIDE MINIMUM 4" CONCRETE AROUND AND UNDER BOTH TRENCH AND BASIN. LEVEL PER MANUFACTURER'S INSTRUCTIONS.

1 / P30.02 TRENCH DRAIN DETAIL

N.T.S.

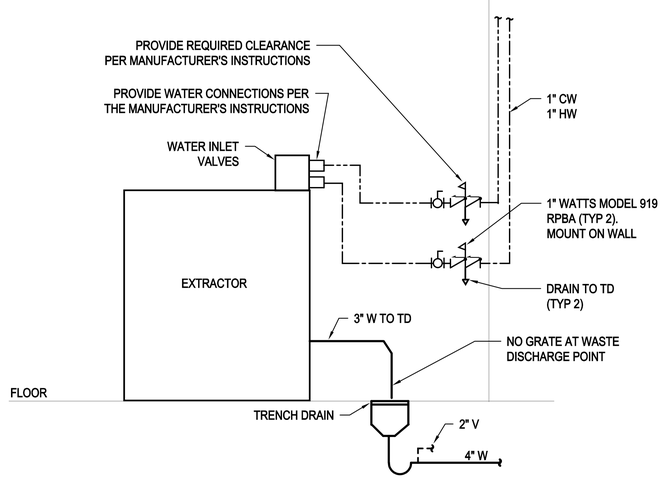

3 / P30.02 EXTRACTOR DETAIL

N.T.S.

2 / P30.02 NOT USED

N.T.S.

RICE fergus MILLER
ARCHITECTURE INTERIORS PLANNING VIZLAB
275 FIFTH STREET, SUITE 100
BREMERTON, WA 98337
360-377-8773
RFMARCH.COM

SIDER + BYERS
MECHANICAL + ELECTRICAL ENGINEERS
192 Nickerson, Suite #300
Seattle, Washington 98109
Phone: 206.285.2966

STATION 57 ADDITION
GIG HARBOR FIRE AND MEDIC ONE
10521 CRESCENT VALLEY DR. NW
GIG HARBOR, WA 98332

PROJECT # 22043

BID SET

ISSUE DATE JANUARY 8, 2024

REVISION SCHEDULE

AHJ APPROVAL STAMP

DETAILS

SHEET #
P30.02

ELECTRICAL LEGEND

SYMBOL	DESCRIPTION
LIGHTING	
	RECESSED LIGHT FIXTURE
	SURFACE OR PENDANT MOUNT LIGHT FIXTURE (CIRCLE INDICATES RECESSED OR CONCEALED JUNCTION BOX)
	WALL MOUNT LIGHT FIXTURE
	SURFACE OR PENDANT MOUNT STRIP LIGHT (CIRCLE INDICATES RECESSED OR CONCEALED JUNCTION BOX)
	EGRESS FIXTURE WITH EMERGENCY BATTERY PACK. PROVIDE UNSWITCHED HOT LEG.
	EMERGENCY BATTERY PACK WITH TWIN HEAD FLOOD PROVIDE UNSWITCHED HOT LEG.
	COMBINATION EXIT/TWIN HEAD FLOOD (PROVIDE DIRECTION ARROWS AS INDICATED) PROVIDE UNSWITCHED HOT LEG.
RECEPTACLES	
	DUPLEX RECEPTACLE
G	DUPLEX RECEPTACLE (G INDICATES GROUND FAULT CIRCUIT INTERRUPTER)
C	DUPLEX RECEPTACLE (C INDICATES ABOVE COUNTER)
S	(1) DUPLEX RECEPTACLE & (1) DUPLEX SWITCHED RECEPTACLE UNDER (1) 2-GANG SWITCH PLATE
	SPECIAL PURPOSE OUTLET - 1Ø, VOLTAGE AND AMPERES AS INDICATED
EQUIPMENT, WIRING AND RACEWAYS	
	DEDICATED CONDUIT HOMERUN TO PANEL & CIRCUIT NUMBERS AS INDICATED ON PLANS
	RACEWAY CONCEALED IN WALL OR CEILING
	RACEWAY CONCEALED UNDERGROUND OR UNDER FLOOR SLAB
	MARKS INDICATE NUMBER OF #12 AWG UNLESS NOTED OTHERWISE
	120/240 VOLT PANELBOARD (OR AT RATED VOLTAGE AS NOTED)
	EXISTING PANELBOARD TO BE RETAINED
J	JUNCTION BOX - SIZE PER CODE
	DISCONNECT SWITCH

SYMBOL	DESCRIPTION
SWITCHES	
$	SINGLE POLE SWITCH
$LV	LOW VOLTAGE SWITCH
$D LV	LOW VOLTAGE DIMMER SWITCH
PC	PHOTOCELL CONTROL
OS	CEILING MOUNTED OCCUPANCY SENSOR (LIGHTING CONTROL)
VS	CEILING MOUNTED VACANCY SENSOR (LIGHTING CONTROL)
SYSTEMS	
	GENERAL - ALL SYSTEMS PROVIDED AND INSTALLED BY 272000 INSTALLING CONTRACTOR PER SPECS AND PLANS.
S	PAGING/ALERT SPEAKER. FLUSH CEILING MOUNT. PROVIDE BOGEN MODEL #S86T725PG8U & TB8 TILE BRIDGE WHERE SHOWN.
AMP	PAGING/ALERT AMPLIFIER. SHELF MOUNT. PROVIDE BOGEN MODEL #C20 WHERE SHOWN & BRIDGE INPUT WITH EXISTING AMP.
CR	CARD READER. ROUGH-IN ONLY. SEE DETAILS FOR MORE INFORMATION.
C 3	COMMUNICATION / DATA OUTLET - WALL MOUNT WITH (2) DATA PORTS AND (2) CAT6 CABLES (4/S BOX WITH SINGLE GANG MUDRING AND COVER PLATE) 3/4"C. TO ACCESSIBLE CEILING SPACE, MOUNT AT +18" AFF UNLESS NOTED OTHERWISE.(# INDICATES QUANTITY OF DATA PORTS AND CABLES, IF DIFFERENT THAN 2).
TV	CATV OUTLET - WALL MOUNT OUTLET AT +76" AFF UNLESS OTHERWISE NOTED. PROVIDE 4S BACKBOX (NEW WALLS), SINGLE GANG MUDRING, (1) 3/4" C. TO NEAREST ACCESSIBLE CEILING AND (1) RG-6 CABLE WITH F-CONNECTOR. TV & MOUNT ARE OFOI.
MISCELLANEOUS	
1	CONSTRUCTION NOTES
1	DEMOLITION NOTES
$	ALL DEVICES WITH LIGHT LINE WEIGHT INDICATES EXISTING TO BE RETAINED. SEE GENERAL NOTES ON EACH SHEET.
$	ALL DEVICES WITH DASH LINE INDICATES EXISTING TO BE REMOVED
AH1 1	MECHANICAL EQUIPMENT CONNECTION
FSD	FIRE SMOKE DAMPER. SHOWN FOR REFERENCE & ELECTRICAL CONNECTION. SEE FA SHEETS FOR MORE INFORMATION.

ABBREVIATIONS

G	GROUND FAULT CIRCUIT INTERRUPTER	TTB	TELEPHONE TERMINAL BOARD
C	MOUNT ABOVE COUNTER	UC	UNDERCOUNTER
DW	DISHWASHER	UG	UNDERGROUND
EC	ELECTRICAL CONTRACTOR	GR	GROUND
TTB	TELEPHONE TERMINAL BOARD	FACP	FIRE ALARM CONTROL PANEL
MW	MICROWAVE	CP	COPIER
MDF	MAIN DISTRIBUTED FRAME (TELECOM)	P.B.	PUSH BUTTON
REF	REFRIGERATOR	VM	VENDING MACHINE

GENERAL NOTES (APPLY TO ALL SHEET)

1. THE CONTRACTOR SHALL REFER TO STRUCTURAL DRAWINGS FOR BRACE FRAMED OR SHEAR WALLS. CONTRACTOR SHALL MOUNT DEVICES AND ROUTE CONDUIT SO AS NOT TO INTERFERE WITH THE STRUCTURAL INTEGRITY OF THE WALL.
2. ROOMS AND/OR AREAS WITHOUT CEILINGS SHALL HAVE ALL CABLES ROUTED IN CONDUIT. CONDUIT SHALL BE INSTALLED TIGHT TO STRUCTURE, ROUTED PARALLEL OR PERPENDICULAR TO STRUCTURE, AND SHALL BE PAINTED TO MATCH ADJACENT SURFACE.
3. PANEL DESIGNATIONS AND CIRCUIT NUMBERS ARE ONLY INDICATED ON THE DRAWINGS FOR REFERENCE BY THE ELECTRICAL CONTRACTOR. THE E.C. IS RESPONSIBLE TO PROVIDE ALL CONDUIT, WIRING, JUNCTION BOXES AND MISCELLANEOUS ACCESSORIES TO ACCOMMODATE INSTALLATION AND CONNECTION OF ALL DEVICES INDICATED ON THE CONTRACT DOCUMENTS. ALL WIRING SHALL BE IN HARD CONDUIT BACK TO THE DESIGNATED PANELBOARD. MC TYPE CABLE IS NOT AN ACCEPTABLE WIRING METHOD. ALL JUNCTION BOXES SHALL BE LABELED IDENTIFYING THE PANELBOARD AND CIRCUIT CONTAINED WITHIN. THERE SHALL BE NO MORE THAN (3) CIRCUITS PER HOMERUN. MULTI-WIRE CIRCUITS ARE NOT ALLOWED. EACH CIRCUIT SHALL CONTAIN A DEDICATED NEUTRAL UNLESS SPECIFICALLY ALLOWED BY THE ENGINEER. ALL WIRING SHALL BE SIZED ACCORDING TO AMPACITY OF THE CIRCUIT BREAKER INDICATED ON THE PANEL SCHEDULES. ALL CONDUIT SHALL BE SIZED PER NEC CODE BASED ON THE CONDUCTOR SIZE, TYPE, QUANTITY AND MINIMUM FILL REQUIREMENTS. CIRCUITS OVER 120 FEET FOR 120V AND 250' FOR 240V SHALL BE UP SIZED ONE WIRE SIZE TO ACCOUNT FOR VOLTAGE DROP. E.C. IS RESPONSIBLE TO SHOW ALL JUNCTION BOX LOCATIONS, CONDUIT ROUTING AND HOMERUNS ON A SET OF AS-BUILT DRAWINGS.
4. FEED THROUGH GFCI RECEPTACLES SHALL NOT BE USED.
5. THERE SHALL BE NO EXPOSED LOW VOLTAGE CABLING OF ANY TYPE IN EXPOSED FINISHED AREAS.
6. ALL SPARE CONDUITS (FOR FUTURE USE) SHALL BE LABELED "SPARE/FUTURE CONDUIT" AT EACH END OF THE CONDUIT WITH 1/2" TALL LETTERS, USING A PERMANENT MARKER.
7. FIRE CAULK ALL WALL PENETRATIONS AS REQUIRED. PROVIDE CONDUIT SLEEVES FOR ALL LOW VOLTAGE CABLES THROUGH NON-RATED WALLS.
8. ALL TYPICAL DEVICES SHALL BE MOUNTED AT CONSISTENT LOCATIONS AND HEIGHTS THROUGHOUT THIS PROJECT, UNLESS NOTED OTHERWISE.
9. SEE ALL DETAIL SHEETS AND RISER DIAGRAMS FOR ADDITIONAL WORK. ALL DETAILS AND RISERS ARE APPLICABLE TO THIS PROJECT WHETHER REFERENCED OR NOT.
10. ALL GROUNDING SHALL CONFORM TO NEC 250.
11. CIRCUITING SHALL BE PROVIDED AS REQUIRED TO MEET THE NEC. ALL SINGLE POLE CIRCUITS SHALL BE PROVIDED WITH DEDICATED NEUTRALS.
12. PROVIDE CUTTING AND PATCHING OF EXISTING WALLS TO ACCOMMODATE INSTALLATION OF NEW WORK.COORDINATE WITH G.C.
13. PROVIDE SEISMIC BRACING OF ELECTRICAL AND SYSTEMS EQUIPMENT FOR AN ESSENTIAL FACILITY.
14. ALL LOW VOLTAGE CABLING SHALL BE PLENUM RATED.

GENERAL DEMOLITION NOTES (APPLY TO ALL SHEETS)

1. IT IS THE CONTRACTOR'S RESPONSIBILITY TO INCLUDE IN HIS/HER BID ALL COSTS ASSOCIATED WITH NECESSARY DEMOLITION TO ALLOW NEW CONSTRUCTION SHOWN IN CONTRACT DOCUMENTS, UNLESS NOTED OTHERWISE. THE CONTRACTOR SHALL REMOVE ALL EXISTING ELECTRICAL EQUIPMENT, LIGHTING FIXTURES, DEVICES, ABANDONED RACEWAYS, CONDUCTORS, TOGETHER WITH ANY AUXILIARY ITEMS TO ALLOW NEW CONSTRUCTION AND FINISH TO OCCUR AS COMPLIMENTED BY THE CONTRACT DOCUMENTS. DASHED LINES INDICATE EXISTING DEVICES AND EQUIPMENT TO BE REMOVED.
2. THESE PLANS DELINEATE THE BASIC SCOPE OF WORK FOR THE REMOVAL OF EXISTING MATERIAL. THE DEMOLITION DRAWINGS AND NOTES ARE PROVIDED WITH THE INTENT TO GENERALLY DESCRIBE AREAS AND LIMITS OF WORK. THE CONTRACTOR SHALL BE FAMILIAR WITH THE SITE AND CONDITIONS THERE AND SHALL NOT RELY SOLELY ON REVIEW OF THE BIDDING DOCUMENTS IN DETERMINING THE EXTENT OF DEMOLITION WORK REQUIRED. COORDINATION OF THESE DRAWINGS WITH REQUIREMENTS FOR CONTRACT WORK IS THE RESPONSIBILITY OF THE CONTRACTOR. DISCREPANCIES BETWEEN OR WITHIN THE CONTRACT DOCUMENTS SHALL BE REPORTED TO THE ENGINEER IMMEDIATELY. THE CONTRACTOR SHALL PROVIDE CLARITY SKETCHES, DIAGRAMS, AND FIELD DIMENSIONS OF EXISTING CONDITIONS AT THE REQUEST OF THE ENGINEER IR/WHEN CONFLICTS ARE IDENTIFIED.
3. E.C. TO REMOVE ELECTRICAL CONNECTIONS TO ALL MECHANICAL EQUIPMENT TO BE DEMOLISHED. E.C. SHALL CHECK ALL DEMOLITION PLANS AND ACTUAL FIELD CONDITIONS FOR UNIT LOCATIONS. COORDINATE WORK WITH MECHANICAL CONTRACTOR. ALL CONDUITS PENETRATING THROUGH THE ROOF AND ACCESSIBLE SHALL BE REMOVED.
4. THE DEMOLITION PLANS HAVE NO INTENT TO SHOW ALL ELECTRICAL DEVICES TO BE REMOVED. ELECTRICAL CONTRACTOR SHALL VERIFY DEMOLITION WORK INVOLVED PRIOR TO BID.
5. REMOVE ALL ELECTRICAL AND SIGNALING DEVICES (INCLUDING, BUT NOT LIMITED TO REMOVAL OF ALL ELECTRICAL PANELS, LIGHTING FIXTURES, RECEPTACLES, MOTOR DISCONNECTS, FIRE ALARM AND OTHER LOW VOLTAGE DEVICES). UNLESS NOTED OTHERWISE.
6. REMOVE ALL WIRES, CABLES AND SURFACE MOUNT RACEWAYS AND APPURTENANCES WHICH SERVE DEVICES BEING REMOVED, CUT CONDUIT FLUSH TO CEILING OR WALL WHEN CONCEALED, AND SEAL OFF WITH SPRAY FOAM. ABANDON FLUSH BOXES AND NON-ACCESSIBLE CONDUIT. PROVIDE COVER PLATES FOR ALL BOXES TO REMAIN.
7. ELECTRICAL CONTRACTOR SHALL COORDINATE WITH THE GENERAL CONTRACTOR FOR ALL CUTTING, PATCHING AND FINISH WORK.
8. CONTRACTOR TO REMOVE AND DELIVER TO OWNER ALL DEVICES THAT ARE IDENTIFIED BY OWNER TO BE RETAINED. CONTRACTOR SHALL COORDINATE WITH OWNER TO ASSURE THAT ALL ITEMS TO BE RETAINED ARE IDENTIFIED PRIOR TO THE START OF DEMOLITION. ALL ITEMS NOT SO IDENTIFIED SHALL BECOME PROPERTY OF THE CONTRACTOR AND SHALL BE DISPOSE OF OFF SITE.
9. FIELD VERIFY EXISTING CONDITIONS AND RACEWAYS CAST IN CONCRETE.
10. E.C. SHALL CONFIRM WITH THE G.C. THE EXTENT OF ANY ARCHITECTURAL DEMOLITION PRIOR TO ANY ELECTRICAL DEMOLITION. E.C. IS RESPONSIBLE FOR ALL ELECTRICAL DEMOLITION AND MAINTAINING EXISTING EQUIPMENT AND CIRCUITING TO REMAIN.

RICE fergus MILLER
ARCHITECTURE INTERIORS PLANNING VIZLAB
275 FIFTH STREET, SUITE 100
BREMERTON, WA 98337
360-377-8773
RFMARCH.COM

BCE engineers, inc.
6021 12th Street East, Suite 200
Fife, Washington 98424
T: 253.922.0446
F: 253.922.0896

CHARLES A. HEATON
STATE OF WASHINGTON
33506
REGISTERED PROFESSIONAL ENGINEER
01/04/24

STATION 57 ADDITION
GIG HARBOR FIRE AND MEDIC ONE
10521 Crescent Valley Dr. NW
Gig Harbor, Washington

PROJECT #	2022010.03
BID SET	
ISSUE DATE	01/08/2024

REVISION SCHEDULE

ELECTRICAL LEGEND, ABBREVIATION & NOTES

SHEET #
E0.01

DATE/ TIME PRINTED: 2/15/2023 10:57:08 AM
(rev)2022010_03 GHFMO_S3_ARCH_2022_detached.rvt

GENERAL NOTES FOR LIGHTING FIXTURE SCHEDULE

1. SEE DRAWINGS FOR EMERGENCY LIGHTING FIXTURES.

2. FOR LIGHTING CONTROLS WHICH INCLUDE DAYLIGHT, OCCUPANCY SENSORS AND TIME CLOCK CONTROLS, THE ELECTRICAL CONTRACTOR SHALL PROVIDE TESTING OF THE CONTROL DEVICES, COMPONENTS, EQUIPMENT AND SYSTEMS TO MAKE SURE THEY ARE CALIBRATED, ADJUSTED AND OPERATE IN ACCORDANCE WITH DRAWINGS AND SPECIFICATIONS. SEQUENCES OF OPERATION SHALL BE FUNCTIONALLY TESTED IN THE PRESENCE OF THE ENGINEER. A COMPLETE REPORT OF TEST PROCEDURES AND RESULTS SHALL BE PREPARED AND FILED WITH THE OWNER.

3. FIXTURE TYPES LISTED ARE TO INDICATE THE TYPE OF STYLE, LAMPING CHARACTERISTICS AND MOUNTING REQUIRED TO FACILITATE THE DESIGN. OTHER FIXTURE MANUFACTURERS MEETING THE LIGHT FIXTURE TYPE CRITERIA ARE ACCEPTABLE UPON EVALUATION BY THE ENGINEER.

LIGHTING FIXTURE SCHEDULE

DESIGNATION	FIXTURE DESCRIPTION	MANUFACTURER/MODEL #	LAMPS	DELIVERED LUMENS	V	W	MOUNTING & REMARKS
AL1	PARKING LOT LIED FIXTURE W/25' POLE AND BASE	LITHONIA LIGHTING DSX0 LED P3 35K 80CRI T3M MVOLT SPA DDBXD	LED - 35K	8439	120	69	
EX1	COMBINATION EXIT SIGN AND EGRESS LIGHT	SURE-LITES APC-7-R-SQ	LED		120	3.7	
EX2	EGRESS LIGHT	SURE-LITES AP2SQLED	LED		120	3.7	
RL1	2X4 LED TROFFER	METALUX CGTX-24-30	LED - 35K	3029	120	24	
SL1	1X4 SURFACE MOUNT LED	METALUX CGTX-14-30-CGTSURF14	LED - 35K	2679	120	24	
W1	WALL MOUNT ALERTING SYSTEM LIGHT WITH RED GLOBE	CANLET - 68-02-1-15W-L-W-F-OG-14-120	LED	1935	120	15	WALL MOUNT ABOVE BED SIMILAR TO THE EXISTING SLEEPING ROOMS

MECHANICAL EQUIPMENT CONNECTION SCHEDULE (EXHAUST FANS, AIR HANDLING UNITS, ETC)

EQUIP.	VOLT/PH	LOAD VA	LOAD MCA	LOAD HP	CIRCUIT PANEL	CIRCUIT BKR	CONDUIT/WIRE SIZE (CU)	MANUAL STARTER (NOTE 1)	MAGNETIC STARTER (NOTE 1)	FUSED DISC. (NOTE 1)	MOTOR RATED DISC SWITCH. (NOTE 1)	REMARKS
ERV- 1	240/1	7680	32		A	36,38	1"C., (3) #8 & (1) #10 GR			EC	EC	NOTE 5
ERV- 1P	120/1	120	1		A	31	3/4"C., (2) #12 & (1) #12 GR					CONDENSATE PUMP
RCP- A1	240/1	750	3.9		D	14,16	3/4"C., (3) #12 & (1) #12 GR				MFR	BUNK GEAR; NOTE 3
RCP- A2	240/1	750	3.9		D	14,16	3/4"C., (3) #12 & (1) #12 GR				MFR	BUNK GEAR; NOTE 3
RCP- A3	240/1	750	3.9		D	14,16	3/4"C., (3) #12 & (1) #12 GR				MFR	BUNK GEAR; NOTE 3
RCP- A4	240/1	750	3.9		D	18,20	3/4"C., (3) #12 & (1) #12 GR				MFR	DECON; NOTE 3
RCP- A5	240/1	750	3.9		D	18,20	3/4"C., (3) #12 & (1) #12 GR				MFR	DECON; NOTE 3
RCP- B1	240/1	750	3.9		D	18,20	3/4"C., (3) #12 & (1) #12 GR				MFR	TOTE STORAGE; NOTE 3
FC- 8	240/1	60	0.25		A	32,34	3/4"C., (3) #12 & (1) #12 GR				EC	INDOOR UNIT; NOTE 4
CU- 3	240/1	2160	9		A	32,34	3/4"C., (3) #12 & (1) #12 GR			EC		OUTDOOR UNIT; NOTE 3; ROUTE CONDUIT WITH MECHANICAL PIPING
FSD- 1	120/1	200	1.67		D	1	3/4"C., (2) #12 & (1) #12 GR					FIRE SMOKE DAMPER - NOTE 2
FSD- 2	120/1	200	1.67		D	1	3/4"C., (2) #12 & (1) #12 GR					FIRE SMOKE DAMPER - NOTE 2
FSD- 3	120/1	200	1.67		D	1	3/4"C., (2) #12 & (1) #12 GR					FIRE SMOKE DAMPER - NOTE 2
FSD- 4	120/1	200	1.67		D	1	3/4"C., (2) #12 & (1) #12 GR					FIRE SMOKE DAMPER - NOTE 2

NOTE:
1. CONTRACTOR LISTED SHALL FURNISH AND INSTALL THE LISTED DEVICE.
2. PROVIDE CONNECTION TO THE FIRE ALARM SYSTEM.
3. PROVIDE WEATHERPROOF DEVICES & CONNECTIONS.
4. E.C. TO INSTALL THERMOSTAT & TRANSFORMER PROVIDED BY M.C. E.C. TO PROVIDE CONDUIT & WIRE FOR CONNECTION OF T-STAT TO MECHANICAL UNIT.
5. M.C. TO FURNISH VFD. E.C. TO INSTALL AND CONNECT.

Room Lighting Control Schedule (For Commissioning Purposes)

Sheet Number	Room Number	Daylight Zone	LV Lighting Control System	LV Occ/Vacancy Sensor	LV Photocell sensor	Stand alone occ/vacancy sensor	Stand alone photocell sensor	Wall mount timer switch	Wall mount occ/vacancy switch	Line voltage wall/Dimmer switch	Low voltage wall/Dimmer switch	Switched Recepts	Alert System Override	Comments
E2.01	SLEEPING RM 5	Yes	Yes	No	No						Yes	No	Yes	Exempt from Photocell and Vacancy Sensor
E2.01	FITNESS RM	Yes	Yes	Yes	Yes						Yes	No	No	
E2.01	DECON	No	Yes	Yes							Yes	No	No	
E2.01	STAFF CHECK-IN	No	Yes	Yes							Yes	No	No	
E2.01	TOTE/ STORAGE	No	Yes	Yes							Yes	No	No	
E2.01	BUNKER GEAR STORAGE	No	Yes	Yes							Yes	No	No	

LIGHTING CONTROL SEQUENCE OF OPERATION

GENERAL REQUIREMENTS

1. PROVIDE AUXILIARY CONTACT FOR INTERFACE TO FIRE FIGHTER CALL RELAY FOR CONTROL OF LIGHTS IN HALLWAYS, KITCHEN, APPARATUS BAY AND DAYROOM.
2. VACANCY/OCCUPANCY SENSORS SHALL BE CONNECTED TOGETHER FOR CONTROL OF ALL LIGHTS IN THE ROOM. SET UP SENSORS IN VACANCY MODE, UNLESS NOTED OTHERWISE. SET ALL SENSORS TO 20-MINUTES.
3. PHOTOCELLS TO BE INSTALLED IN EDGE OF PRIMARY AND SECONDARY DAYLIGHT ZONES. TRIGGER 1 OF PHOTOCELL TO CONTROL LIGHTS IN PRIMARY DAYLIGHT ZONES, TRIGGER 2 OF PHOTOCELL TO CONTROL LIGHTS IN SECONDARY DAYLIGHT ZONES. DIMMING SHALL BE CONTINUOUS AND SHALL BE CONFIGURED TO COMPLETELY SHUT OFF ALL CONTROLLED LIGHTS WITH IN THE DAY LIGHTING ZONE.
4. PROGRAMMING SHALL BE PROVIDED FOR ADJUSTMENT OF LIGHTS ON SITE.
5. ALL LIGHTS WHERE INDICATED SHALL BE CONTROLLED VIA 0-10V DIMMING.

SLEEPING ROOM

ROOM LIGHTS TO BE CONTROLLED VIA LOW VOLTAGE DIMMING CONTROL AT ENTRANCE.

1. WALL CONTROL STATION
   a. BUTTON 1 - FUNCTION: ON/OFF
   b. BUTTON 2 - FUNCTION; DIM UP/DOWN
2. WALL LIGHT TO BE CONTROLLED VIA ALERTING SYSTEM.

PHYSICAL FITNESS

1. DAYLIGHT ZONES (DESIGNATION 'a (p)').
   a. PRIMARY DAYLIGHT ZONE - DIM CONTROLLED WITH PHOTOCELL - TRIGGER LEVEL 1.
   b. SECONDARY DAYLIGHT ZONE - DIM CONTROLLED WITH PHOTOCELL - TRIGGER LEVEL 2.
2. WALL CONTROL STATIONS
   a. SWITCH 1 - LIGHTS 'a' - ON/OFF; UP/DOWN
   b. SWITCH 2 - LIGHTS 'a' - ON/OFF; UP/DOWN
3. VACANCY SENSOR TO TURN OFF THE LIGHTS AFTER 20 MINUTES

TOTE/STORAGE ROOM

1. LOW VOLTAGE SWITCHES AT EACH ENTRANCE - ON/OFF
2. OCCUPANCY SENSOR TO TURN OFF THE LIGHTS AFTER 20 MINUTES

BUNKER GEAR ROOM/DECON

1. WALL CONTROL STATIONS
   a. SWITCH 1 - LIGHTS - ON/OFF
   b. SWITCH 2 - LIGHTS - ON/OFF
2. OCCUPANCY SENSORS TO TURN OFF THE LIGHTS AFTER 20 MINUTES

RICE fergus MILLER
ARCHITECTURE INTERIORS PLANNING VIZLAB
275 FIFTH STREET, SUITE 100
BREMERTON, WA 98337
360-377-8773
RFMARCH.COM

BCE engineers, inc.
6021 12th Street East, Suite 200
Fife, Washington 98424
T: 253.922.0446
F: 253.922.0896

CHARLES A. HEATON
STATE OF WASHINGTON
23006
REGISTERED PROFESSIONAL ENGINEER
01/08/24

STATION 57 ADDITION
GIG HARBOR FIRE AND MEDIC ONE

10521 Crescent Valley Dr. NW
Gig Harbor, Washington

PROJECT # 2022010.03

BID SET

ISSUE DATE 01/08/2024

REVISION SCHEDULE

LIGHTING FIXTURE SCHEDULE

SHEET #

E0.02

DATE/ TIME PRINTED: 2/15/2023 10:57:08 AM
(rsw/2022010_03 GHFMO_S3_ARCH_2022_detached.rvt

DEMOLITION NOTES

1. EXISTING DEVICES TO BE DISCONNECTED AND RECONNECTED AT NEW LOCATION. MAINTAIN EXISTING CABLES, POWER OR LIGHTING CIRCUITS. INTERCEPT EXISTING CONDUIT AND WIRING, EXTEND, AND RE-ROUTE TO NEW LOCATION AS REQUIRED.
2. EXISTING LIGHT FIXTURES TO BE REMOVED AND DISPOSED.
3. EXISTING BARBEQUE GAS RESET SWITCH TO BE RELOCATED. INTERCEPT EXISTING CONDUIT/WIRING, EXTEND, AND REROUTE TO NEW LOCATION.
4. EXISTING PANEL TO BE REPLACED WITH NEW. SEE ONE-LINE DIAGRAM FOR ADDITIONAL INFORMATION.
5. REMOVE EXISTING CEILING SPEAKER. MAINTAIN FOR REINSTALLATION.
6. REMOVE EXISTING SMOKE DETECTOR. MAINTAIN FOR REINSTALLATION.
7. EXISTING DEVICE TO BE RELOCATED TO NEW LOCATION.
8. REMOVE EXISTING LIGHT FIXTURE. STORE AND PROTECT LIGHT FIXTURE FOR FUTURE INSTALLATION AT THE SAME LOCATION. MAINTAIN LIGHTING CIRCUIT.

CONSTRUCTION NOTES

1. EXISTING LIGHTING FIXTURES AND DEVICES TO REMAIN.
2. EXISTING TELECOM DATA & VOICE BACKING BOARD, PATCH PANELS, PHONE TERMINATIONS, PAGING, CABLE TV (CATV), RADIO, AND SECURITY HEAD-END EQUIPMENT TO REMAIN. SHOWN FOR REFERENCE.

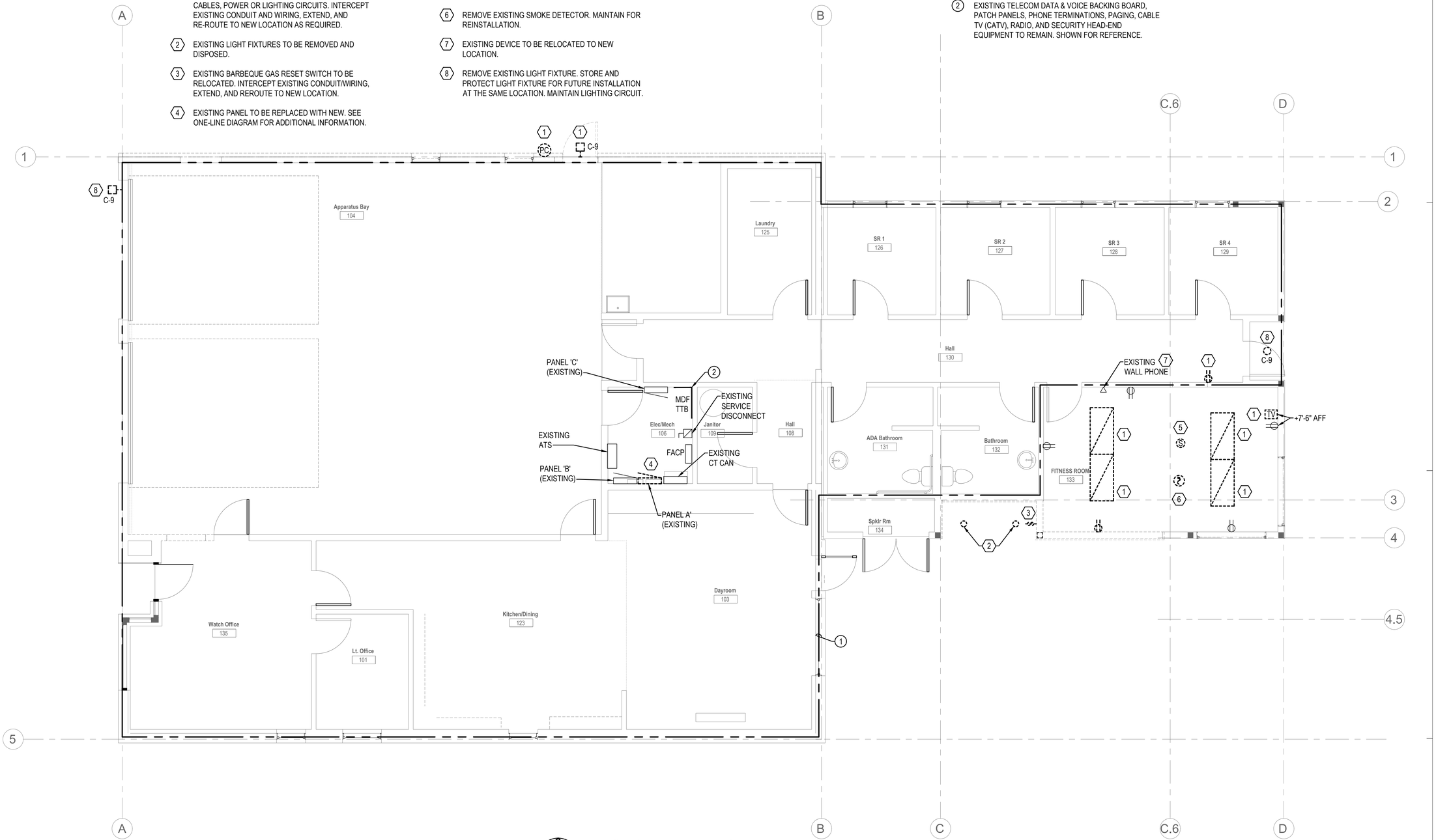

1 FIRST FLOOR ELECTRICAL DEMOLITION PLAN
SCALE: 1/4"=1'-0"

N

4' 2' 0 4' 8'
SCALE: 1/4" = 1'-0"

RICE fergus MILLER
ARCHITECTURE INTERIORS PLANNING VIZLAB
275 FIFTH STREET, SUITE 100
BREMERTON, WA 98337
360-377-8773
RFMARCH.COM

BCE engineers, inc.
6021 12th Street East, Suite 200
Fife, Washington 98424
T: 253.922.0446
F: 253.922.0896

CHARLES A. HEATON
STATE OF WASHINGTON
20006
REGISTERED PROFESSIONAL ENGINEER
01/08/24

STATION 57 ADDITION
GIG HARBOR FIRE AND MEDIC ONE
10521 Crescent Valley Dr. NW
Gig Harbor, Washington

PROJECT #	2022010.03
BID SET	
ISSUE DATE	01/08/2024

REVISION SCHEDULE

FIRST FLOOR ELECTRICAL DEMOLITION PLAN

SHEET #
ED2.01

DATE/ TIME PRINTED: 2/15/2023 10:57:08 AM
(rev)2022010_03 GHFMO_53_ARCH_2022_detached.rvt

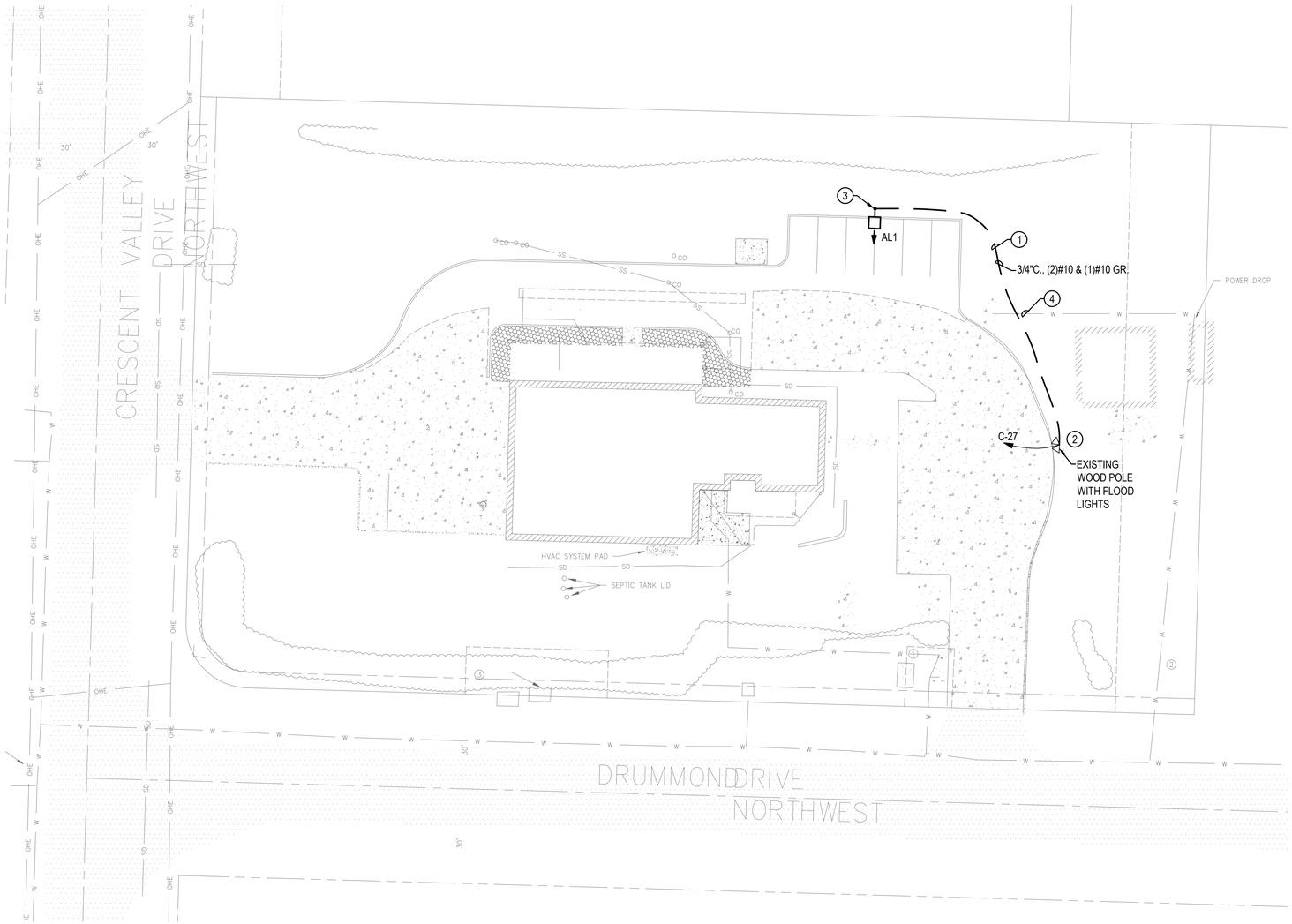

1 ELECTRICAL SITE PLAN

SCALE: 1"=20'-0"

N

CONSTRUCTION NOTES

1. PROVIDE TRENCHING, BACKFILL & COMPACTION FOR NEW CONDUIT.
2. CONNECT NEW LIGHT TO EXISTING FLOOD LIGHT LIGHTING CIRCUIT.
3. PROVIDE CONCRETE POLE BASE. INSTALL POLE 3' AWAY FROM THE PARKING CURB.
4. ELECTRICAL CONTRACTOR TO PROTECT EXISTING WATER LINE DURING CONSTRUCTION.

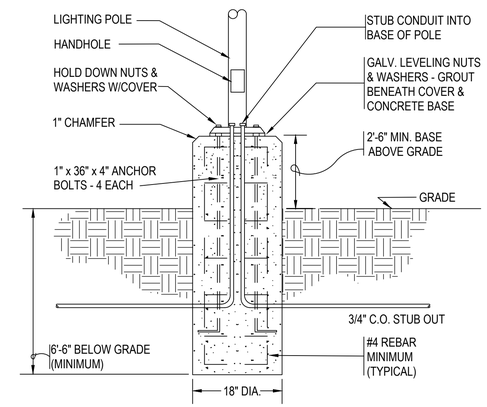

2 POLE BASE DETAIL

SCALE: NOT TO SCALE

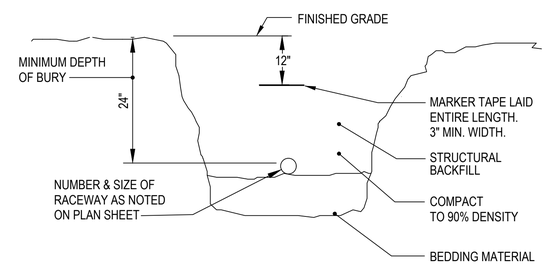

3 DIRECT BURIAL RACEWAY DETAIL

SCALE: NOT TO SCALE

RICE fergus MILLER
ARCHITECTURE INTERIORS PLANNING VIZLAB
275 FIFTH STREET, SUITE 100
BREMERTON, WA 98337
360-377-8773
RFMARCH.COM

BCE engineers, inc.
6021 12th Street East, Suite 200
Fife, Washington 98424
T: 253.922.0446
F: 253.922.0896

CHARLES A. HEATON
STATE OF WASHINGTON
23006
REGISTERED PROFESSIONAL ENGINEER
01/08/24

STATION 57 ADDITION
GIG HARBOR FIRE AND MEDIC ONE

10521 Crescent Valley Dr. NW
Gig Harbor, Washington

PROJECT #	2022010.03
BID SET	
ISSUE DATE	01/08/2024

REVISION SCHEDULE

ELECTRICAL SITE PLAN

SHEET #

E1.01

DATE/ TIME PRINTED: 2/15/2023 10:57:08 AM
(/rsv)/2022010_03 GHFMO_S3_ARCH_2022_detached.rvt

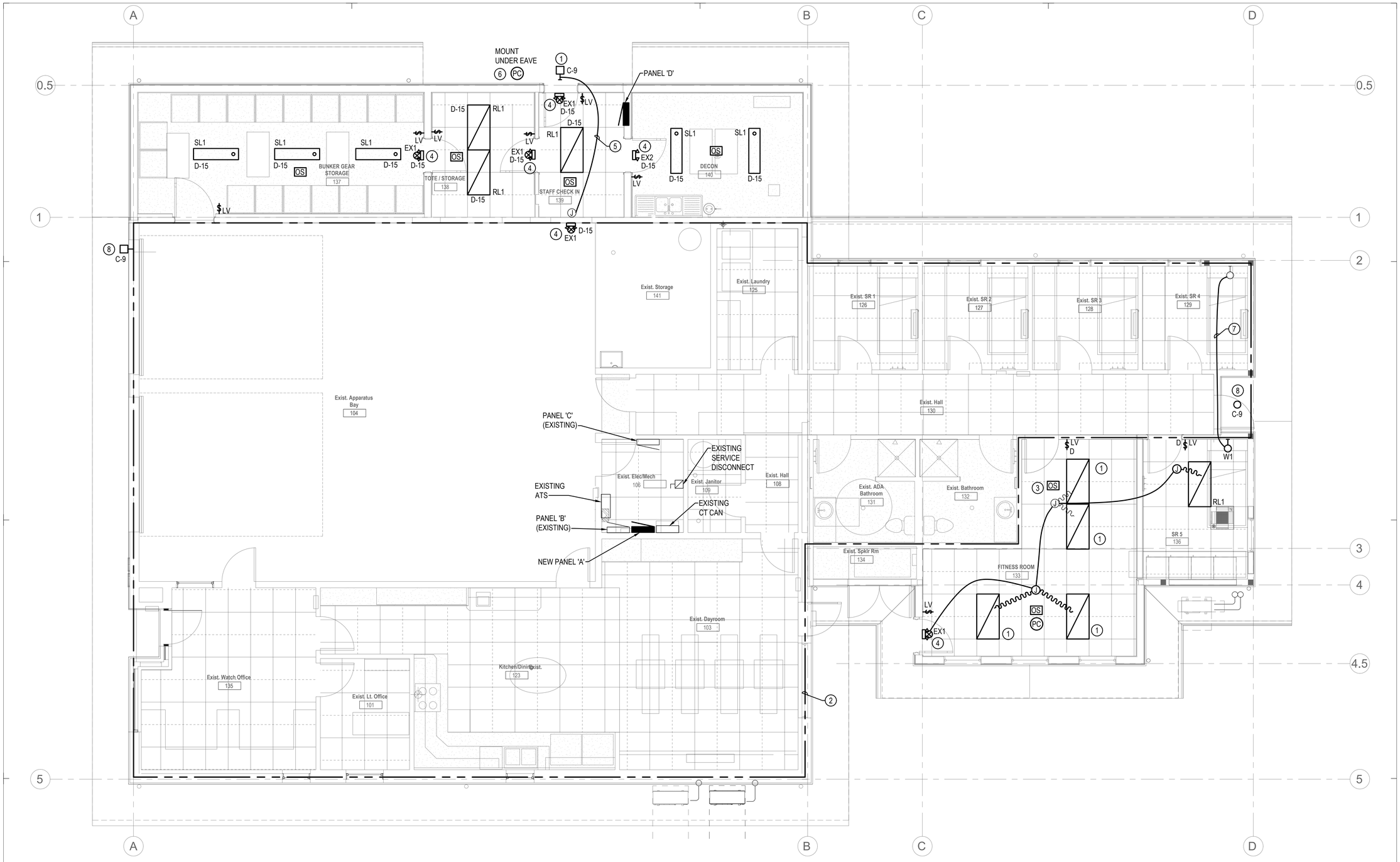

1 FIRST FLOOR LIGHTING PLAN

SCALE: 1/4"=1'-0"

N

4' 2' 0 4' 8'

SCALE: 1/4" = 1'-0"

CONSTRUCTION NOTES

1. RELOCATED LIGHT FIXTURES.
2. EXISTING LIGHTING FIXTURES TO REMAIN.
3. CONNECT LIGHTS TO EXISTING LIGHTING CIRCUIT.
4. PROVIDE CONNECTION TO UNSWITCHED HOT-LEG AND LIGHTING CIRCUIT WITHIN THIS SPACE.
5. EXTEND EXISTING EXTERIOR LIGHT CIRCUIT.
6. RELOCATED PHOTOCELL FOR CONTROL OF EXTERIOR LIGHTS. RECONNECT TO EXISTING EXTERIOR LIGHTING CIRCUITS.
7. CONNECT TO EXISTING ALERTING LIGHTS CIRCUIT.
8. INSTALL EXISTING LIGHT FIXTURE AT THE SAME LOCATION AND CONNECT TO EXISTING LIGHTING CIRCUIT.

RICE fergus MILLER
ARCHITECTURE INTERIORS PLANNING VIZLAB
275 FIFTH STREET, SUITE 100
BREMERTON, WA 98337
360-377-8773
RFMARCH.COM

BCE engineers, inc.
6021 12th Street East, Suite 200
Fife, Washington 98424
T: 253.922.0446
F: 253.922.0896

CHARLES A. HEATON
STATE OF WASHINGTON
REGISTERED PROFESSIONAL ENGINEER
01/08/24

STATION 57 ADDITION
GIG HARBOR FIRE AND MEDIC ONE

10521 Crescent Valley Dr. NW
Gig Harbor, Washington

PROJECT #	2022010.03
BID SET	
ISSUE DATE	01/08/2024

REVISION SCHEDULE

FIRST FLOOR LIGHTING PLAN

SHEET #

E2.01

DATE/ TIME PRINTED: 2/15/2023 10:57:08 AM
(raw)2022010_03 GHFMO_S3_ARCH_2022_detached.rvt

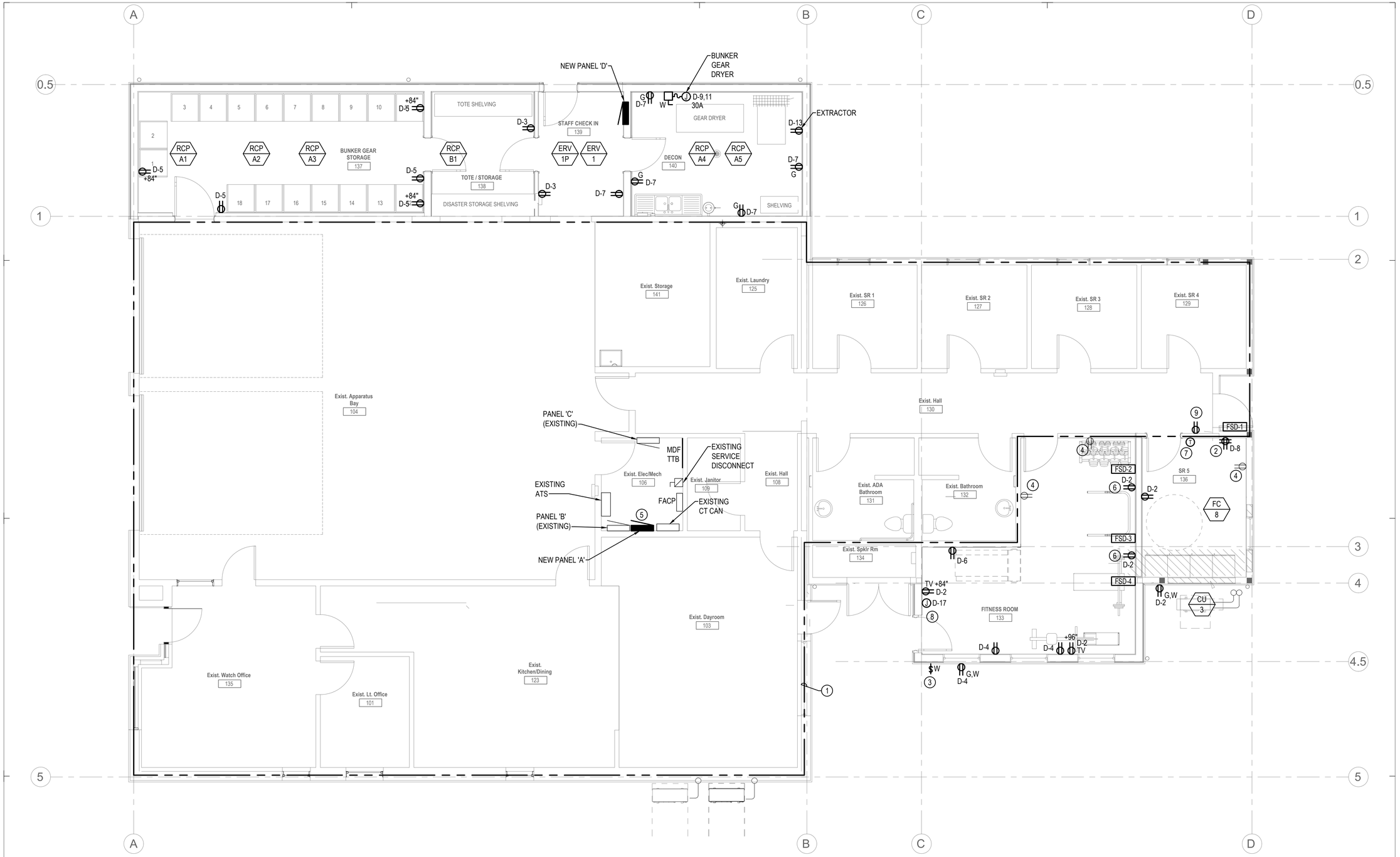

1 FIRST FLOOR POWER PLAN

SCALE: 1/4"=1'-0"

SCALE: 1/4" = 1'-0"

CONSTRUCTION NOTES

1. EXISTING RECEPTACLES AND DEVICES TO REMAIN.
2. MOUNT IN HEADBOARD. SEE ARCHITECTURAL ELEVATION.
3. NEW LOCATION FOR BARBEQUE GAS RESET SWITCH. EXTEND EXISTING CONDUIT/WIRE TO NEW LOCATION.
4. EXISTING RECEPTACLE & CIRCUIT TO REMAIN. PROVIDE NEW FACEPLATE. MATCH NEW FACEPLATE COLOR WITH EXISTING FACEPLATE COLOR. PROVIDE LABEL IDENTIFYING PANEL & CIRCUIT.
5. EXISTING PANEL TO BE REPLACED WITH NEW IN THE SAME LOCATION. EXTEND ALL EXISTING CONDUITS & WIRE TO NEW BREAKERS.
6. MOUNT RECEPTACLE AT +12" AFF TO BOTTOM. MOUNT HORIZONTALLY BELOW MIRROR.
7. EC TO INSTALL T-STAT. T-STAT FURNISHED BY MC.
8. POWER FOR MECHANICAL 24V TRANSFORMER. MOUNT ABOVE THE CEILING. COORDINATE EXACT LOCATION WITH MECHANICAL PRIOR TO ROUGH-IN.
9. CONNECT RECEPTACLE TO EXISTING RECEPTACLE CIRCUIT.

RICE fergus MILLER
ARCHITECTURE INTERIORS PLANNING VIZLAB
275 FIFTH STREET, SUITE 100
BREMERTON, WA 98337
360-377-8773
RFMARCH.COM

BCE engineers, inc.
6021 12th Street East, Suite 200
Fife, Washington 98424
T: 253.922.0446
F: 253.922.0896

CHARLES A. HEATON
STATE OF WASHINGTON
20006
REGISTERED PROFESSIONAL ENGINEER
01/08/24

STATION 57 ADDITION
GIG HARBOR FIRE AND MEDIC ONE

10521 Crescent Valley Dr. NW
Gig Harbor, Washington

PROJECT #	2022010.03
BID SET	
ISSUE DATE	01/08/2024

REVISION SCHEDULE

FIRST FLOOR POWER PLAN

SHEET #

E3.01

DATE/ TIME PRINTED: 2/15/2023 10:57:08 AM
(rev)2022010_03 GHFMO_S3_ARCH_2022_setbsc1ed.rvt

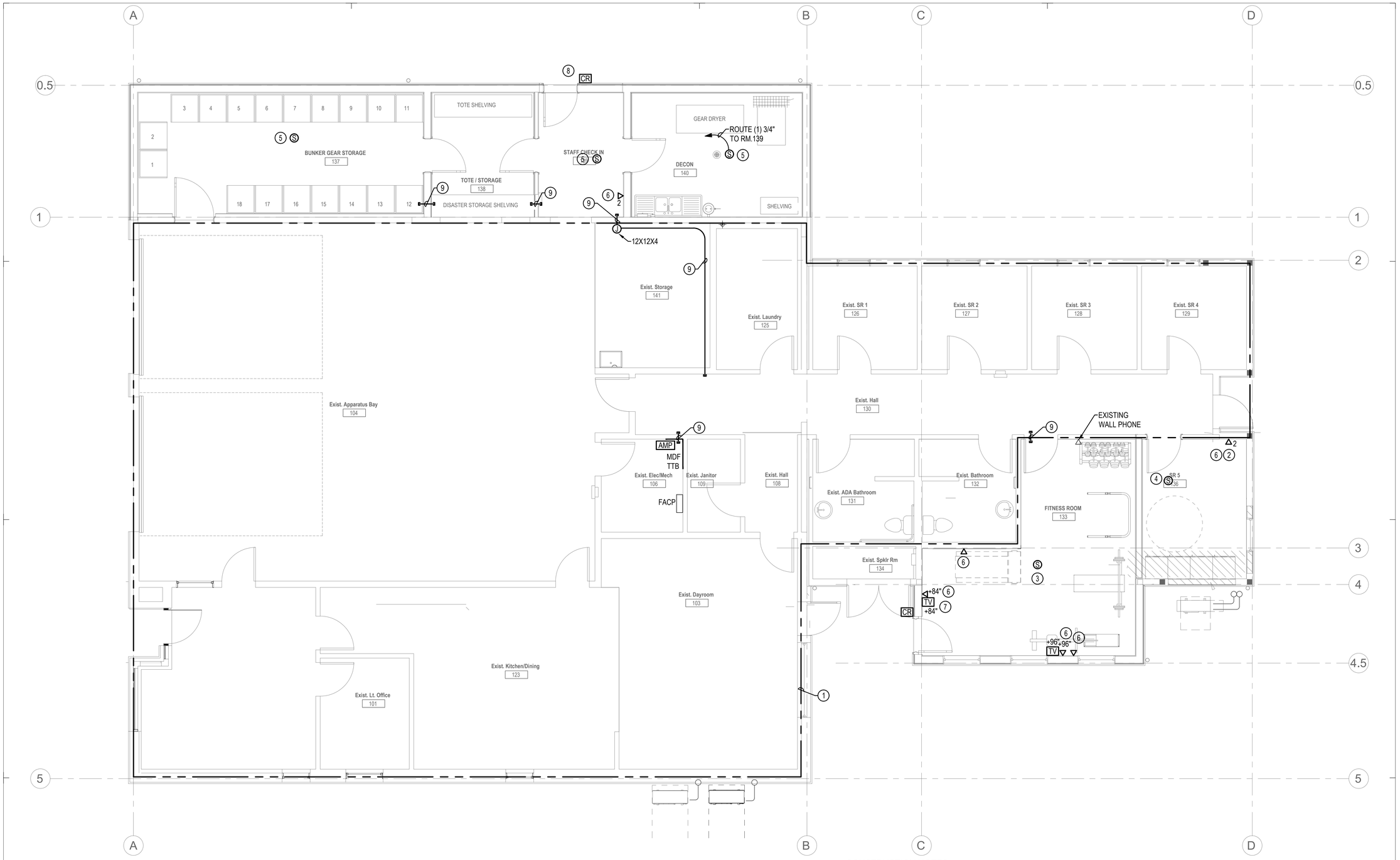

1 FIRST FLOOR SYSTEMS PLAN

SCALE: 1/4"=1'-0"

N

4' 2' 0 4' 8'

SCALE: 1/4" = 1'-0"

CONSTRUCTION NOTES

1. EXISTING DEVICES TO REMAIN.
2. MOUNT IN HEADBOARD. SEE ARCHITECTURAL ELEVATION. CUT, PATCH AND REFINSH WALL AS REQUIRED TO RECESS NEW CONDUIT AND BOX.
3. REINSTALL EXISTING SPEAKER AND RECONNECT TO EXISTING SPEAKER WIRING.
4. CONNECT NEW SPEAKER TO SLEEPING ROOM SPEAKER ZONE.
5. CONNECT NEW SPEAKERS TO NEW AMPLIFIER / HALLWAY ZONE.
6. ROUTE DATA CABLING BACK TO THE PATCH PANEL IN ELECTRICAL ROOM 106 AND TERMINATE.
7. RELOCATE AND RE-CONNECT NEW TV OUTLET TO EXISTING COAX CABLE. RE-USE AND EXTEND EXISTING COAXIAL CABLING WITH SAME CABLE TYPE (FIELD VERIFY RG6 VS RG59) AND COAXIAL F-CONNECTOR COUPLER.
8. PROVIDE ACCESS CONTROL ROUGH-IN FOR NEW DOOR FRAME PER DETAILS. RECESS CONDUITS AND JUNCTION BOXES IN NEW WALL.
9. PROVIDE (2) 2" AND (1) 1" CONDUIT BETWEEN THE ACCESSIBLE CEILINGS SHOWN FOR DATA, FUTURE SECURITY AND SPARE.

RICE fergus MILLER
ARCHITECTURE INTERIORS PLANNING VIZLAB
275 FIFTH STREET, SUITE 100
BREMERTON, WA 98337
360-377-8773
RFMARCH.COM

BCE engineers, inc.
6021 12th Street East, Suite 200
Fife, Washington 98424
T: 253.922.0446
F: 253.922.0896

CHARLES A. HEATON
STATE OF WASHINGTON
20006
REGISTERED PROFESSIONAL ENGINEER
01/08/24

STATION 57 ADDITION
GIG HARBOR FIRE AND MEDIC ONE

10521 Crescent Valley Dr. NW
Gig Harbor, Washington

PROJECT #	20220010.03
BID SET	
ISSUE DATE	01/08/2024

REVISION SCHEDULE

FIRST FLOOR SYSTEMS PLAN

SHEET #

E4.01

DATE/ TIME PRINTED: 2/15/2023 10:57:08 AM
(raw)20220010_03 GHFMO_S3_ARCH_2022_detached.rvt

CONSTRUCTION NOTES

1. DISCONNECT AND REMOVE EXISTING PANEL 'A'. MAINTAIN BRANCH CIRCUIT WIRING & CONDUITS FOR RECONNECTION TO NEW PANEL 'A'.
2. ALL BRANCH CIRCUIT WIRING, FEEDER & CONDUITS TO BE RECONNECTED TO THE NEW PANEL.
3. METERING POINT.

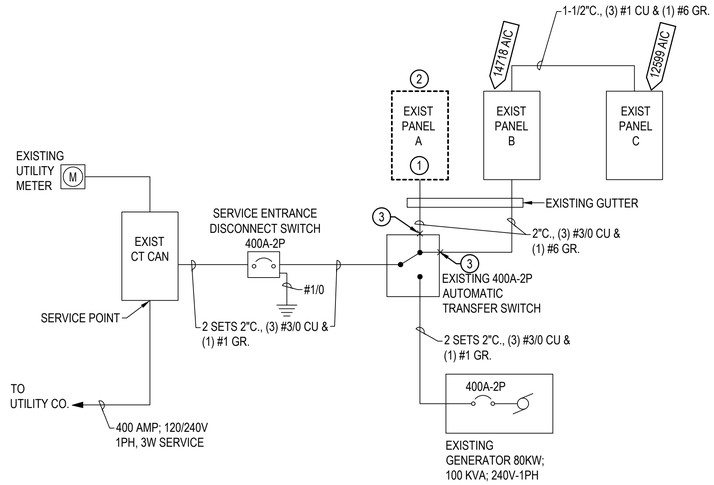

1 EXISTING ELECTRICAL ONE-LINE DIAGRAM

SCALE: NTS

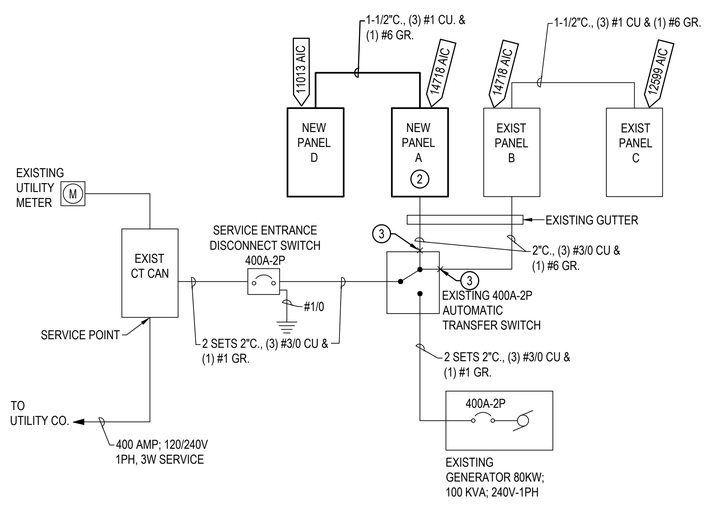

2 REVISED ELECTRICAL ONE-LINE DIAGRAM

SCALE: NTS

GIG HARBOR FIRE & RESCUE - STATION 57
30 DAY PEAK DEMAND CALCULATION WORKSHEET
PANEL A & B (TOTAL SERVICE)

NEC 220.87 AND WAC 296-46B-900(3)(j)

30-day demand study from :	3/15/2023	to	4/17/2023	
Phase to Phase Voltage (Volts) :	240			
Phases (1=Single Phase, 3=Three Phase) :	1			
30 Day Peak Demand For Panel A On :	3/26/2023	=	42.04	Amps
30 Day Peak Demand For Panel B On :	3/18/2023	=	62.59	Amps
Total 30-Day Peak Demand for the Service:			**104.63**	Amps
Apparent Peak Demand		=	**25.11**	KVA
NEC 220.87(2) adjustment factor		X	1.25	
Adjusted Peak Demand		=	**31.39**	KVA
Seasonal adjustment factor		X	1.00	
Seasonal adjustment peak demand		=	**31.39**	KVA
Occupancy adjustment factor		X	1.00	
Occupancy adjustment peak demand		=	**31.39**	KVA
Other adjustement factor(s)		X	1.00	
Measured Peak Demand with Adjustments		=	**31.39**	KVA
New Calculated Demand Load Added	Rev Pnl A	+	**28.90**	KVA
Metered Demand Based CALCULATED DEMAND LOAD :			**60.29**	**KVA**
CALCULATED DEMAND CURRENT :			**251**	**AMPS**
Existing Service Size:			**400**	**AMPS**

GIG HARBOR FIRE & RESCUE - STATION 57
30 DAY PEAK DEMAND CALCULATION WORKSHEET
PANEL A

NEC 220.87 AND WAC 296-46B-900(3)(j)

30-day demand study from :	3/15/2023	to	4/17/2023	
Phase to Phase Voltage (Volts) :	240			
Phases (1=Single Phase, 3=Three Phase) :	1			
30 Day Peak Demand For Panel A On :	3/18/2023	=	**42.04**	Amps
Apparent Peak Demand		=	**10.09**	KVA
NEC 220.87(2) adjustment factor		X	1.25	
Adjusted Peak Demand		=	**12.61**	KVA
Seasonal adjustment factor		X	1.00	
Seasonal adjustment peak demand		=	**12.61**	KVA
Occupancy adjustment factor		X	1.00	
Occupancy adjustment peak demand		=	**12.61**	KVA
Other adjustement factor(s)		X	1.00	
Measured Peak Demand with Adjustments		=	**12.61**	KVA
New Calculated Demand Load Added		+	**28.90**	KVA
Metered Demand Based CALCULATED DEMAND LOAD :			**41.51**	**KVA**
CALCULATED DEMAND CURRENT :			**173**	**AMPS**
Existing Panel Size:			**200**	**AMPS**

RICE fergus MILLER
ARCHITECTURE INTERIORS PLANNING VIZLAB
275 FIFTH STREET, SUITE 100
BREMERTON, WA 98337
360-377-8773
RFMARCH.COM

BCE engineers, inc.
6021 12th Street East, Suite 200
Fife, Washington 98424
T: 253.922.0446
F: 253.922.0896

CHARLES A. HEATON
STATE OF WASHINGTON
23006
REGISTERED PROFESSIONAL ENGINEER
01/08/24

STATION 57 ADDITION
GIG HARBOR FIRE AND MEDIC ONE
10521 Crescent Valley Dr. NW
Gig Harbor, Washington

PROJECT #	20220010.03
BID SET	
ISSUE DATE	01/08/2024

REVISION SCHEDULE

EXISTING & REVISED ELECTRICAL ONE-LINE DIAGRAMS

SHEET #
E5.01

DATE/ TIME PRINTED: 2/15/2023 10:57:08 AM
(/raw/2022010_03 GHFMO_S3_ARCH_2022_detached.rvt

NAME:	MAIN SWITCHGEAR (EXISTING)	VOLTAGE: 120/240V	400 MCB
LOC.:	MAIN ELECTRICAL ROOM	PHASE: 1	400 BUS
TYPE:	SUSE, NEMA 1	WIRE: 3	
MOUNT:	SURFACE		
FEED:	BOTTOM		22,000 AIC MINIMUM

LOAD TYPE	LOAD	PANEL/LOAD TYPE	OC?	OVERCURRENT PROTECTION FUSE BREAKER	NUMBER POLES	RATING	A	B
		PANEL A						
		PANEL B						
		TOTAL THIS PANEL->						
		NEXT SECTION->						
		TOTAL WITH SLAVE SECTION->						
		TOTAL CONNECTED CURRENT->						

LIGHTING(125%) = 0.00
RECEPTS<=10000(100%) = 0.00
RECEPTS>10000(50%) = 0.00
RECEPTS TOTAL = 0.00
ELECTRIC HEAT(100%) = 0.00
LARGEST MOTOR(125%) = 0.00
OTHER MOTORS(100%) = 0.00
MOTOR TOTAL = 0.00
WATER HEATERS(100%) = 0.00
KITCHEN LOADS(65%) = 0.00
APPLIANCES(100%) = 0.00
DEDICATED(100%) = 0.00
MISC(100%) = 0.00

TOTAL CONNECTED LOAD (VA): **TOTAL DEMAND LOAD (VA):**
TOTAL CONNECTED CURRENT (A): **TOTAL DEMAND CURRENT (A):**

NOTES: L=LIGHTING, R=RECEPTACLES, H=ELECTRIC HEAT, ML=LARGEST MOTOR, MO=OTHER MOTORS, WH=WATER HEATERS, K=KITCHEN LOADS, A=APPLIANCES, D=DEDICATED, X=MISC, SF=SUB FEED

SEE SHEET E5.01 FOR DEMAND CALCULATIONS

PANEL:	D (NEW)	1 PH	3 WIRE	VOLTAGE: 120/240V			100A MLO
LOC:	STAFF ENTRY		MOUNT: FLUSH	FEED: BOTT			
TYPE:	NEMA 1		POLES: 30	SF MAINS:			11013 AIC

	LOAD TYPE	LOAD	CIRCUIT DIRECTORY	CIR. NO.	CIR. BRKR P	CIR. BRKR AMP	A	B	CIR. BRKR P	CIR. BRKR AMP	CIR. NO.	CIRCUIT DIRECTORY	LOAD	LOAD TYPE
	D	800	SMOKE/FIRE DAMPERS	1	1	20	1700		1	20	2	RECEPT - FITNESS, SR 5	900	R
	R	360	RECEPT - STORAGE 138, STAFF CHECK	3	1	20		900	1	20	4	RECEPT - FITNESS	540	R
	R	540	RECEPT - BUNKER GEAR STORAGE 137	5	1	20	1540		1	20	6	RECEPT - FITNESS	1000	D
	R	540	RECEPT - DECON 140, STAFF CHECK IN	7	1	20		900	1	20	8	RECEPT - SLEEPING RM	360	R
1	A	3000	BUNKER GEAR DRYER	9	2		3000		1	20	10	SPARE		
1	A	3000		11		30G		3000	1	20	12	SPARE		
1	A	1200	EXTRACTOR	13	1	20G	2325		2		14	RCP-1, 2 & 3	1125	H
	L	192	LIGHTING RM 137,138,139,140	15	1	20		1317		20	16		1125	H
	D	100	MECHANICAL 24V XFMR	17	1	20	1225		2		18	RCP-4, 5 & 6	1125	H
			SPARE	19	1	20		1125		20	20		1125	H
			SPARE	21	1	20					22	SPACE		
			SPACE	23							24	SPACE		
			SPACE	25							26	SPACE		
			SPACE	27							28	SPACE		
			SPACE	29							30	SPACE		
		9732	TOTAL				THIS PANEL->	9790	7242			TOTAL	7300	

LIGHTING(125%) = 240.00
RECEPTS<=10000(100%) = 3240.00
RECEPTS>10000(50%) = 0.00
RECEPTS TOTAL = 3240.00
ELECTRIC HEAT(100%) = 4500.00
LARGEST MOTOR(125%) = 0.00
OTHER MOTORS(100%) = 0.00
MOTOR TOTAL = 0.00
WATER HEATERS(100%) = 0.00
KITCHEN LOADS(65%) = 0.00
APPLIANCES(100%) = 7200.00
DEDICATED(100%) = 1900.00
MISC(100%) = 0.00

9790 7242

TOTAL CONNECTED LOAD (VA): 17,032.00
TOTAL CONNECTED CURRENT (A): 70.97
TOTAL DEMAND LOAD (VA): 17,080.00
TOTAL DEMAND CURRENT (A): 71.17

NOTES: L=LIGHTING, R=RECEPTACLES, H=ELECTRIC HEAT, ML=LARGEST MOTOR, MO=OTHER MOTORS, WH=WATER HEATERS, K=KITCHEN LOADS, A=APPLIANCES, D=DEDICATED, X=MISC, SF=SUB FEED

(1) GFI BREAKER

PANEL:	A (EXIST)	1 PH	3 WIRE	VOLTAGE: 120/240V			200A MCB
LOC:	ELECT RM		MOUNT: SURFACE	FEED: BOTT			BUS
TYPE:	NEMA 1		POLES: 30	SF MAINS:			14718 AIC

LOAD TYPE	LOAD	CIRCUIT DIRECTORY	CIR. NO.	CIR. BRKR P	CIR. BRKR AMP	A	B	CIR. BRKR P	CIR. BRKR AMP	CIR. NO.	CIRCUIT DIRECTORY	LOAD	LOAD TYPE
		OVEN - RM 102	1	2				2		2	TRAINING PROP		
			3		50				60	4			
		RECEPTS - KITCHEN	5	1	20			2		6	DH-1		
			7	1	20				60	8			
		RECEPT - GENERATOR	9	1	20			2		10	CM-1		
		BLOCK HEATER - GENERATOR	11	1	20				30	12			
		BATTERY CHARGER - GENERATOR	13	1	20			2		14	CM-2		
		RECEPT - STOR 105	15	1	20				30	16			
		RECEPT - LAUNDRY	17	1	20			2		18	FC1		
		RECEPT - SLEEP RMS	19	1	20				20	20			
		SPACE	21					2		22	FC-3,4,5,6,7		
		UNIT HEATER #1	23	2					20	24			
			25		30					26	SPACE		
		UNIT HEATER #2	27	2						28	SPACE		
			29		30					30	SPACE		
		TOTAL				THIS PANEL->					TOTAL		

LIGHTING(125%) = 0.00
RECEPTS<=10000(100%) = 0.00
RECEPTS>10000(50%) = 0.00
RECEPTS TOTAL = 0.00
ELECTRIC HEAT(100%) = 0.00
LARGEST MOTOR(125%) = 0.00
OTHER MOTORS(100%) = 0.00
MOTOR TOTAL = 0.00
WATER HEATERS(100%) = 0.00
KITCHEN LOADS(65%) = 0.00
APPLIANCES(100%) = 0.00
DEDICATED(100%) = 0.00
MISC(100%) = 0.00

TOTAL CONNECTED LOAD (VA):
TOTAL CONNECTED CURRENT (A):
TOTAL DEMAND LOAD (VA):
TOTAL DEMAND CURRENT (A):

NOTES: L=LIGHTING, R=RECEPTACLES, H=ELECTRIC HEAT, ML=LARGEST MOTOR, MO=OTHER MOTORS, WH=WATER HEATERS, K=KITCHEN LOADS, A=APPLIANCES, D=DEDICATED, X=MISC, SF=SUB FEED

SEE SHEET E5.01 FOR DEMAND CALCULATIONS

PANEL:	A (NEW)	1 PH	3 WIRE	VOLTAGE: 120/240V			200A MCB
LOC:	ELECT RM		MOUNT: SURFACE	FEED: BOTT			
TYPE:	NEMA 1; REPLACES EXISTING PANEL; SER		POLES: 42	SF MAINS:			14718 AIC

LOAD TYPE	LOAD	CIRCUIT DIRECTORY	CIR. NO.	CIR. BRKR P	CIR. BRKR AMP	A	B	CIR. BRKR P	CIR. BRKR AMP	CIR. NO.	CIRCUIT DIRECTORY	LOAD	LOAD TYPE
		OVEN - RM 102	1	2				2		2	TRAINING PROP		
			3		50				60	4			
		RECEPTS - KITCHEN	5	1	20			2		6	DH-1		
			7	1	20				60	8			
		RECEPT - GENERATOR	9	1	20			2		10	CM-1		
		BLOCK HEATER - GENERATOR	11	1	20				30	12			
		BATTERY CHARGER - GENERATOR	13	1	20			2		14	CM-2		
		RECEPT - STOR 105	15	1	20				30	16			
		RECEPT - LAUNDRY	17	1	20			2		18	FC1		
		RECEPT - SLEEP RMS	19	1	20				20	20			
		SPACE	21					2		22	FC-3,4,5,6,7		
		UNIT HEATER #1	23	2					20	24			
			25		30					26	SPACE		
		UNIT HEATER #2	27	2						28	SPACE		
			29		30					30	SPACE		
MO	120	CONDENSATE PUMP - ERV-1P	31	1	20		1230	2		32	FC-8 & CU-3	1110	MO
		SPARE	33	1	20	1110			20	34		1110	MO
		SPARE	35	1	20		3840	2		36	ERV-1	3840	ML
		SPARE	37	1	20	3840			40	38		3840	ML
		SPACE	39				9790	2		40	PANEL D	9790	SF
		SPACE	41			7242			100	42		7242	SF
	120	TOTAL				THIS PANEL->	12192	14860			TOTAL	26932	

LIGHTING(125%) = 240.00
RECEPTS<=10000(100%) = 3240.00
RECEPTS>10000(50%) = 0.00
RECEPTS TOTAL = 3240.00
ELECTRIC HEAT(100%) = 4500.00
LARGEST MOTOR(125%) = 9600.00
OTHER MOTORS(100%) = 2340.00
MOTOR TOTAL = 11940.00
WATER HEATERS(100%) = 0.00
KITCHEN LOADS(65%) = 0.00
APPLIANCES(100%) = 7200.00
DEDICATED(100%) = 1900.00
MISC(100%) = 0.00

12192 14860

TOTAL ADDED LOAD (VA): 27,052.00
TOTAL ADDED CURRENT (A): 112.72
TOTAL ADDED DEMAND LOAD (VA): 29,020.00
TOTAL ADDED DEMAND CURRENT (A): 120.92

NOTES: L=LIGHTING, R=RECEPTACLES, H=ELECTRIC HEAT, ML=LARGEST MOTOR, MO=OTHER MOTORS, WH=WATER HEATERS, K=KITCHEN LOADS, A=APPLIANCES, D=DEDICATED, X=MISC, SF=SUB FEED

SEE SHEET E5.01 FOR DEMAND CALCULATIONS

RICE fergus MILLER
ARCHITECTURE INTERIORS PLANNING VIZLAB
275 FIFTH STREET, SUITE 100
BREMERTON, WA 98337
360-377-8773
RFMARCH.COM

BCE engineers, inc.
6021 12th Street East, Suite 200
Fife, Washington 98424
T: 253.922.0446
F: 253.922.0896

CHARLES A. HEATON
STATE OF WASHINGTON
23006
REGISTERED PROFESSIONAL ENGINEER
01/08/24

STATION 57 ADDITION
GIG HARBOR FIRE AND MEDIC ONE
10521 Crescent Valley Dr. NW
Gig Harbor, Washington

PROJECT # 2022010.03
BID SET
ISSUE DATE 01/08/2024
REVISION SCHEDULE

PANEL SCHEDULES

SHEET #
E6.01

DATE/ TIME PRINTED: 2/15/2023 10:57:08 AM
{\rev\2022\10_03 GHFMO_S3_ARCH_2022_detached.rvt

PANEL: B (EXIST) 1 PH 3 WIRE VOLTAGE: 120/240V 200A MCB
LOC: ELECT RM MOUNT: SURFACE FEED: BOTT BUS
TYPE: NEMA 1 POLES: 30 SF MAINS: 14718 AIC

LOAD TYPE	LOAD	CIRCUIT DIRECTORY	CIR. NO.	CIR. BRKR P	CIR. BRKR AMP	A	B	CIR. BRKR P	CIR. BRKR AMP	CIR. NO.	CIRCUIT DIRECTORY	LOAD	LOAD TYPE
R	180	CEILING RECEPT	1	1	20	15050		2		2	PANEL C	14870	SF
R	180	CEILING RECEPT	3	1	20		12015		125	4		11835	SF
R	180	RECEPT - TOILET 117	5	1	20	180		2		6	SPARE		
R	180	RECEPT - TOILET 118	7	1	20		180		60	8			
R	360	APP BAY RECEPT - N. WALL	9	1	20	360		2		10	SPARE		
R	720	APP BAY RECEPT - S. WALL	11	1	20		720		30	12			
MO	1200	DIESEL FUME EXH FAN	13	1	20	1760		1	20	14	DRY SYSTEM AIR COMP	560	MO
MO	1190	FC-3, DH-3	15	2			1290	1	20	16	EF-3	100	MO
MO	1190		17		20	2190		2		18	EWH2 - RM 117	1000	WH
MO	1750	FC-2, DH-2	19	2			2750		20	20		1000	WH
MO	1750		21		20	2750		2		22	EWH2 - RM 118	1000	WH
MO	1100	SF-2, DH-4	23	2			2100		20	24		1000	WH
MO	1100		25		20	1600		2		26	AIR COMPRESSOR	500	MO
A	700	MICROWAVE	27	1	20		1200		20	28		500	MO
A	600	COFFE MACHINE	29	1	20	800		1	20	30	RPBA BOX	200	D
	12380	TOTAL				THIS PANEL->					TOTAL	32565	
						24690	20255						
						24690	20255						

LIGHTING(125%) = 5568.75
RECEPTS<=10000(100%) = 7380.00 LARGEST MOTOR(125%) = 0.00 KITCHEN LOADS(65%) = 0.00
RECEPTS>10000(50%) = 0.00 OTHER MOTORS(100%) = 16100.00 APPLIANCES(100%) = 6100.00
RECEPTS TOTAL = 7380.00 MOTOR TOTAL = 16100.00 DEDICATED(100%) = 5160.00
ELECTRIC HEAT(100%) = 1000.00 WATER HEATERS(100%) = 4750.00 MISC(100%) = 0.00

TOTAL CONNECTED LOAD (VA): 44,945.00
TOTAL CONNECTED CURRENT (A): 187.27
TOTAL DEMAND LOAD (VA): 46,058.75
TOTAL DEMAND CURRENT (A): 191.91

NOTES: L=LIGHTING, R=RECEPTACLES, H=ELECTRIC HEAT, ML=LARGEST MOTOR, MO=OTHER MOTORS, WH=WATER HEATERS, K=KITCHEN LOADS, A=APPLIANCES, D=DEDICATED, X=MISC, SF=SUB FEED

PANEL: C (EXIST) 1 PH 3 WIRE VOLTAGE: 120/240V 125A MLO
LOC: ELECT RM MOUNT: SURFACE FEED: BOTT BUS
TYPE: NEMA 1 POLES: 42 SF MAINS: 12599 AIC

LOAD TYPE	LOAD	CIRCUIT DIRECTORY	CIR. NO.	CIR. BRKR P	CIR. BRKR AMP	A	B	CIR. BRKR P	CIR. BRKR AMP	CIR. NO.	CIRCUIT DIRECTORY	LOAD	LOAD TYPE
L	740	LIGHTS - APP BAY	1	1	20	740		1	20	2	SPARE		
L	740	LIGHTS - RMS 106,107,108,109,116,117	3	1	20		740	1	20	4	SPARE		
L	800	LIGHTS - RMS 111,112,113,114,115,119	5	1	20	1000		1	20	6	GAS HWH-1 IGNITOR, HW CIRC PUMP	200	MO
L	1040	LTS - RMS 100-103	7	1	20		1240	1	20	8	FACP	200	D
L	840	LTS - EXTERIOR	9	1	20	1560		1	20	10	COMM BACKBOARD RECEPTS	720	D
		SPARE	11	1	20		180	1	20	12	ELECT ROOM RECEPT	180	R
		SPARE	13	1	20	500		2		14	EWH1 - SPRINKLER RM	500	H
R	1260	RECEPTS -WATCH OFFICE	15	1	20		1760		20	16		500	H
R	1440	RECEPTS - LT OFFICE	17	1	20	2940		1	20	18	WASHER	1500	A
R	360	RECEPTS - DISPATCH	19	1	20		760	1	20	20	DRYER	400	A
R	1260	RECEPTS - ENTERTAINMENT	21	1	20	1960		1	20	22	EF-1	700	MO
R	360	RECEPT - TRAINING	23	1	20		1060	1	20	24	EF-2	700	MO
R	360	RECEPT - TRAINING	25	1	20	1060		1	20	26	SF-1	700	MO
L	295	FLOOD LIGHT ON WOOD POLE	27	1	20		1795	1	20	28	DISHWASHER	1500	A
D	1920	240V RECEPT - TRAINING	29	2		2670		1	20	30	S-1 (HW DISPENSER)	750	WH
D	1920		31		20		2420	1	20	32	KITCHEN HOOD	500	MO
		SPARE	33	1	20	100		1	20	34	GASD RANG IGNITOR & SOLENOID	100	D
		SPARE	35	1	20			1	20	36	SPARE		
MO	1180	APP BAY DOOR #1	37	1	20	1540		1	20	38	KITCHEN RECEPTS - COUNTER	360	R
MO	1180	APP BAY DOOR #2	39	1	20		1880	1	20	40	REFRIG	700	A
D	100	APP BAY DOOR SIGNAL SYSTEM	41	1	20	800		1	20	42	REFRIG	700	A
	15795	TOTAL				THIS PANEL->					TOTAL	10910	
						14870	11835						
						14870	11835						

LIGHTING(125%) = 5568.75
RECEPTS<=10000(100%) = 5580.00 LARGEST MOTOR(125%) = 0.00 KITCHEN LOADS(65%) = 0.00
RECEPTS>10000(50%) = 0.00 OTHER MOTORS(100%) = 5160.00 APPLIANCES(100%) = 4800.00
RECEPTS TOTAL = 5580.00 MOTOR TOTAL = 5160.00 DEDICATED(100%) = 4960.00
ELECTRIC HEAT(100%) = 1000.00 WATER HEATERS(100%) = 750.00 MISC(100%) = 0.00

TOTAL CONNECTED LOAD (VA): 26,705.00
TOTAL CONNECTED CURRENT (A): 111.27
TOTAL DEMAND LOAD (VA): 27,818.75
TOTAL DEMAND CURRENT (A): 115.91

NOTES: L=LIGHTING, R=RECEPTACLES, H=ELECTRIC HEAT, ML=LARGEST MOTOR, MO=OTHER MOTORS, WH=WATER HEATERS, K=KITCHEN LOADS, A=APPLIANCES, D=DEDICATED, X=MISC, SF=SUB FEED

RICE fergus MILLER
ARCHITECTURE INTERIORS PLANNING VIZLAB
275 FIFTH STREET, SUITE 100
BREMERTON, WA 98337
360-377-8773
RFMARCH.COM

BCE engineers, inc.
6021 12th Street East, Suite 200
Fife, Washington 98424
T: 253.922.0446
F: 253.922.0896

CHARLES A. HEATON
STATE OF WASHINGTON
23006
REGISTERED PROFESSIONAL ENGINEER
01/08/24

STATION 57 ADDITION
GIG HARBOR FIRE AND MEDIC ONE
10521 Crescent Valley Dr. NW
Gig Harbor, Washington

PROJECT # 2022010.03
BID SET
ISSUE DATE 01/08/2024

REVISION SCHEDULE

PANEL SCHEDULES

SHEET #
E6.02

DATE/ TIME PRINTED: 2/15/2023 10:57:08 AM
(rev)2022010_03 GHFMO_S3_ARCH_2022_detached.rvt

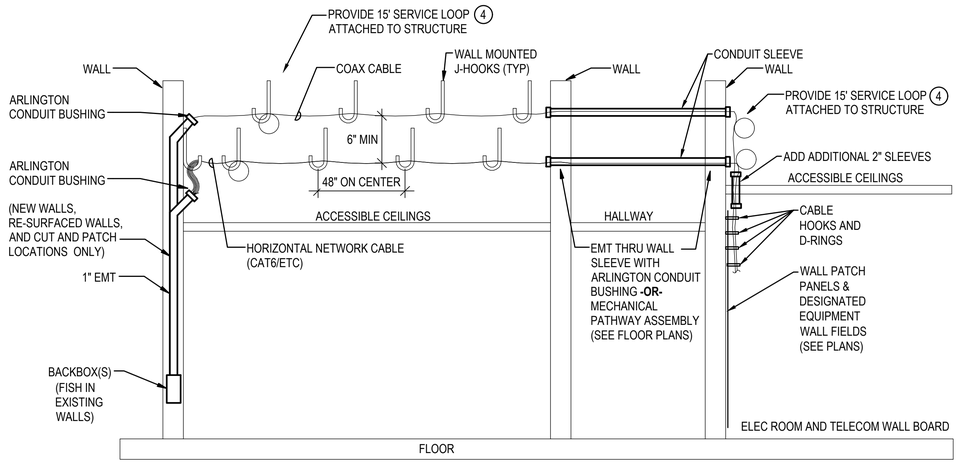

1 J-HOOK AND CABLE PATHWAYS SECTION DETAIL
SCALE: DIAGRAMMATIC

*VERIFY WITH ONWER FOR PREFERRED LABELING INFORMATION

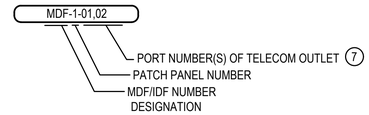

2 TELECOMMUNICATIONS OUTLET LABEL IDENTIFICATION FORMAT
SCALE: DIAGRAMMATIC

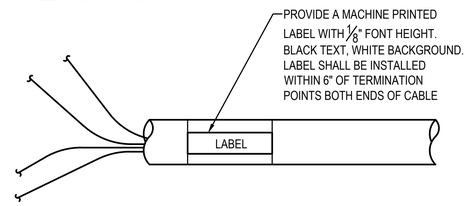

3 TYPICAL CAT6 HORIZONTAL CABLE LABELING
SCALE: DIAGRAMMATIC

TELECOMMUNICATIONS OUTLET CONSTRUCTION NOTES

1. SEE SECTION 27 2000 FOR TELECOMMUNICATIONS OUTLET TYPE, STYLE, AND COLOR.
2. PROVIDE IVORY TELECOMMUNICATIONS WALL OUTLET JACKS WITH IVORY FACEPLATES TO MATCH ADJACENT / EXISTING OUTLETS.
3. PROVIDE (2) CAT 6 CABLES FROM THE TELECOMMUNICATIONS OUTLET TO THE TELECOMMUNICATIONS ROOM. PROVIDE BLUE CABLE COLOR FOR GENERAL DATA.
4. PROVIDE A 15 FOOT SERVICE LOOP IN THE ACCESSIBLE CEILING SPACE ATTACHED TO STRUCTURE OR TRUSS/BEAM, UNLESS OTHERWISE NOTED.

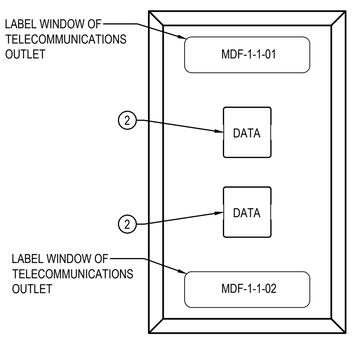

4 TYPICAL TELECOMMUNICATIONS OUTLET LABELING
SCALE: DIAGRAMMATIC

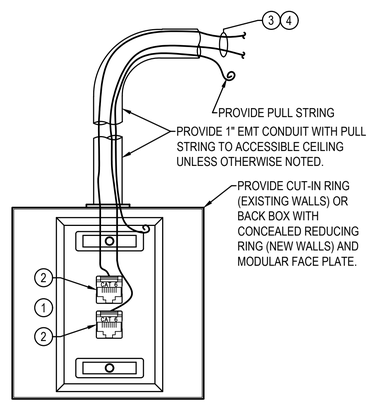

5 TYPICAL TELECOMMUNICATIONS TWO PORT OUTLET
SCALE: DIAGRAMMATIC

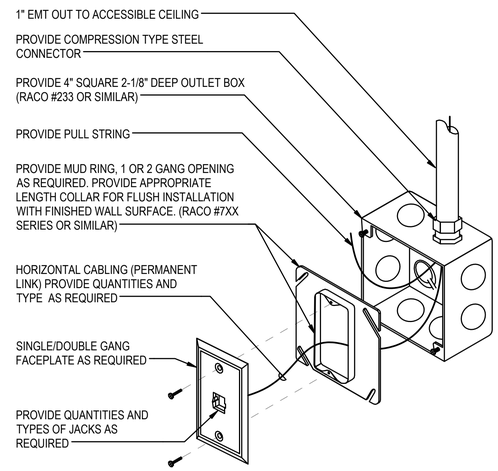

6 TYPICAL TELECOMMUNICATIONS OUTLET INSTALLATION NEW WALLS
SCALE: DIAGRAMMATIC

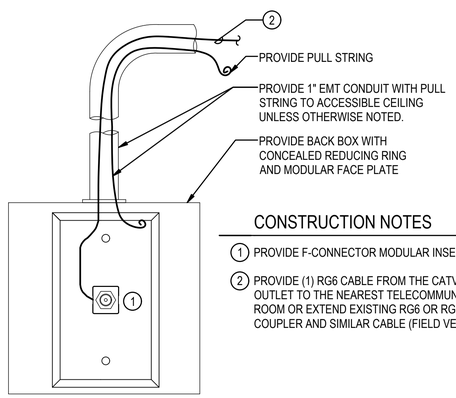

CONSTRUCTION NOTES

1. PROVIDE F-CONNECTOR MODULAR INSERT
2. PROVIDE (1) RG6 CABLE FROM THE CATV OUTLET TO THE NEAREST TELECOMMUNICATIONS ROOM OR EXTEND EXISTING RG6 OR RG59 WITH COUPLER AND SIMILAR CABLE (FIELD VERIFY).

7 TYPICAL TV / CATV OUTLET
SCALE: DIAGRAMMATIC

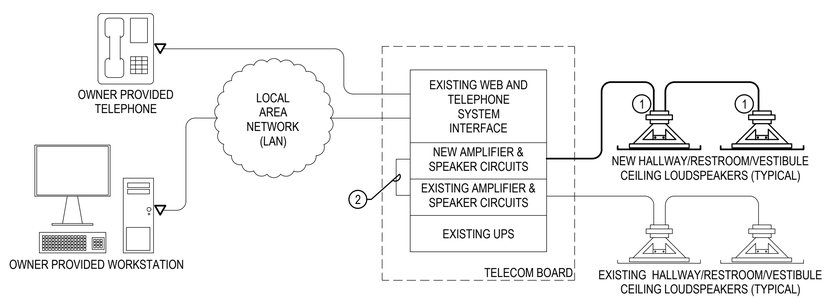

GENERAL NOTES (INTERCOM SYSTEM)

1. ALL CABLING AND RELATED EQUIPMENT SHALL BE PROVIDED AND INSTALLED BY THE TELECOM DATA & VOICE CONTRACTOR, UNLESS NOTED OTHERWISE.

CONSTRUCTION NOTES (INTERCOM SYSTEM)

1. PROVIDE QUANTITIES WHERE SHOWN ON THE PLANS. SEE LEGEND.
2. BRIDGE AMPLIFIER INPUTS TO EXTEND EXISTING PAGING ZONE TO NEW AMP WITH SHIELDED MIC/LINE CABLE BELDEN 9451P OR EQUAL.
3. PROVIDE 18/2 SPEAKER CABLING AS REQUIRED. SUPPORT WITH J-HOOKS PER TELECOMMUNICATIONS CABLE REQUIREMENTS
4. PROVIDE NEW AMP AND SET ON EXISTING WALL SHELF. SEE LEGEND.

8 INTERCOM COM /ALERT PAGING RISER DIAGRAM
SCALE: DIAGRAMMATIC

RICE fergus MILLER
ARCHITECTURE INTERIORS PLANNING VIZLAB
275 FIFTH STREET, SUITE 100
BREMERTON, WA 98337
360-377-8773
RFMARCH.COM

BCE engineers, inc.
6021 12th Street East, Suite 200
Fife, Washington 98424
T: 253.922.0446
F: 253.922.0896

STATION 57 ADDITION
GIG HARBOR FIRE AND MEDIC ONE
10521 Crescent Valley Dr. NW
Gig Harbor, Washington

PROJECT #	2022010.03
BID SET	
ISSUE DATE	01/08/2024

REVISION SCHEDULE

SYSTEMS DETAILS

SHEET #
E7.01

DATE/ TIME PRINTED: 2/15/2023 10:57:08 AM
(raw)2022010_03 GHFMO_S3_ARCH_2022_detached.rvt

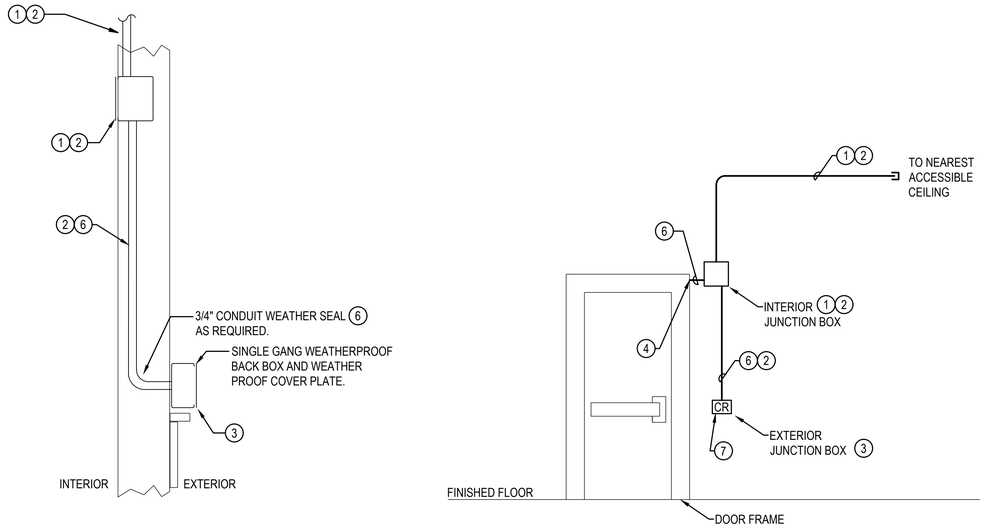

1 TYPICAL ACCESS CONTROL DETAIL (NEW DOOR & WALL) ROUGH-IN ONLY
SCALE: DIAGRAMMATIC

GENERAL NOTES (NEW DOORS)

1. FOR CLARITY, NOT ALL CONDUITS ARE SHOWN, EXCEPT WHERE NOTED DIAGRAMMATICALLY FOR ROUGH-IN DETAIL. SEE PLANS FOR ADDITIONAL INFORMATION AND REQUIREMENTS.
2. ALL EXTERIOR PENETRATIONS ARE TO BE DRILLED CAREFULLY FROM THE OUTSIDE THROUGH THE SIDING/PANELING WITH EVERY EFFORT POSSIBLE MADE TO AVOID DAMAGE BEYOND THE INTENDED PENETRATION. CONFIRM EXACT METHOD WITH ARCHITECT **PRIOR TO ROUGH-IN.**
3. ROUGH-IN FOR FUTURE SECURITY SYSTEMS PROVIDED AND INSTALLED BY DIVISION 26.

CONSTRUCTION NOTES (NEW DOORS)

1. PROVIDE (1) 1" CONDUIT PATHWAY FROM THE ACCESSIBLE CEILING TO THE ACCESS CONTROL DOOR JUNCTION BOX AS REQUIRED. PROVIDE 4S DEEP JUNCTION BOX NEAR THE TOP CORNER OF THE DOOR ON THE INTERIOR & LATCH SIDE.
2. RECESS / CONCEAL CONDUITS AND JUNCTION BOXES IN NEW CONSTRUCTION AREAS AT NEW WALLS AND DOORS.
3. INSTALL CARD READER ROUGH-IN AT APPROXIMATELY +4FT AFF. FIELD VERIFY CARD READER ROUGH-IN HEIGHT IS ON A FLAT SIDING SURFACE AND ABOVE EXTERIOR WAINSCOTING HORIZONTAL TRIM.
4. PROVIDE 3/4" CONDUIT STUB INTO SIDE OF DOOR FRAME FOR FUTURE DOOR POSITION SWITCH AND ELECTRIC STRIKE CABLING. SEAL PENETRATION.
5. PROVIDE A 1-GANG BACK BOX MOUNTED HORIZONTALLY ABOVE THE DOOR FOR FUTURE REQUEST TO EXIT MOTION SENSOR.
6. PROVIDE 3/4" METAL RACEWAY(S), QUANTITIES AS REQUIRED.
7. FUTURE ACCESS CONTROL DEVICE. SHOWN FOR REFERENCE. PROVIDE BLANK PLATES TYPICAL. DOOR FRAME DOES NOT REQUIRE FURTHER MODIFICATION BEYOND CONDUIT STUB(S) FOR FUTURE WIRES.

RICE fergus MILLER
ARCHITECTURE INTERIORS PLANNING VIZLAB
275 FIFTH STREET, SUITE 100
BREMERTON, WA 98337
360-377-8773
RFMARCH.COM

BCE engineers, inc.
6021 12th Street East, Suite 200
Fife, Washington 98424
T: 253.922.0446
F: 253.922.0896

CHARLES A. HEATON
STATE OF WASHINGTON
23006
REGISTERED
PROFESSIONAL ENGINEER
01/08/24

STATION 57 ADDITION
GIG HARBOR FIRE AND MEDIC ONE
10521 Crescent Valley Dr. NW
Gig Harbor, Washington

PROJECT #	2022010.03
BID SET	
ISSUE DATE	01/08/2024

REVISION SCHEDULE

SECURITY DETAILS
ROUGH-IN ONLY

SHEET #
E7.02

DATE/ TIME PRINTED: 2/15/2023 10:57:08 AM
(rev)2022010_03 GHFMO_53_ARCH_2022_detached.rvt

FIRE ALARM SYSTEM LEGEND

SYMBOL	DESCRIPTION
FACP	EXISTING FIRE ALARM SYSTEM CONTROL PANEL - GAMEWELL 7100
FAPS	FIRE ALARM SYSTEM POWER SUPPLY FOR NOTIFICATION DEVICES
FARAP	FIRE ALARM SYSTEM REMOTE ANNUNCIATOR PANEL
BAT	BATTERY CABINET
GMAP	GRAPHIC MAP
P	MANUAL PULL STATION - WALL MOUNT OPERABLE PART BETWEEN 42" AND 48" ABOVE FINISH FLOOR
?	SMOKE DETECTOR (CEILING MOUNTED)
?	COMBINATION SMOKE & CARBON MONOXIDE (C/O) DETECTOR (CEILING MOUNTED)
	HEAT DETECTOR (CEILING MOUNTED)
?=--	DUCT SMOKE DETECTOR
C/O	CARBON MONOXIDE SENSOR
FS	SPRINKLER SYSTEM FLOW SWITCH
PS	SPRINKLER SYSTEM PRESSURE SWITCH
TS	SPRINKLER SYSTEM TAMPER SWITCH
BFP	SPRINKLER SYSTEM BACKFLOW PREVENTER
PIV	SPRINKLER SYSTEM POST INDICATOR VALVE
M	FIRE ALARM SYSTEM MONITOR MODULE
R	FIRE ALARM SYSTEM RELAY MODULE
	COMBINATION HORN / STROBE - CEILING MOUNTED
	FIRE ALARM CLEAR (WHITE) STROBE ONLY - CEILING MOUNTED
	COMBINATION HORN / STROBE - WALL MOUNTED WITH THE ENTIRE STROBE LENS NOT LESS THAN 80" OR MORE THAN 96" ABOVE THE FINISHED FLOOR OR NOT MORE THAN 6" BELOW THE CEILING, WHICHEVER IS LOWER
	FIRE ALARM CLEAR (WHITE) STROBE ONLY - WALL MOUNTED WITH THE ENTIRE STROBE LENS NOT LESS THAN 80" OR MORE THAN 96" ABOVE THE FINISHED FLOOR OR NOT MORE THAN 6" BELOW THE CEILING, WHICHEVER IS LOWER
	SPRINKLER SYSTEM ALARM BELL (24 VOLTS D.C.)
RT / RI	REMOTE TEST STATION / REMOTE INDICATOR
	DOOR HOLDER
FSD	FIRE / SMOKE DAMPER
	TRANSMITTER ANTENNA

MISCELLANEOUS

SYMBOL	DESCRIPTION
1 A	MECHANICAL EQUIPMENT CONNECTION - "1" INDICATES MECHANICAL EQUIPMENT TYPE AND "A" INDICATES THE MECHANICAL EQUIPMENT IDENTIFICATION.
1	CONSTRUCTION NOTES
1	RISER CONSTRUCTION NOTES
$	ALL NEW DEVICES INDICATED WITH A DARK CONTINUOUS LINE TYPE
$	ALL EXISTING DEVICES THAT ARE TO BE RETAINED ARE INDICATED WITH A LIGHT CONTINUOUS LINE TYPE
J	JUNCTION BOX
F	F INDICATES FIXED TEMPERATURE TYPE
FA	FA INDICATES FIRE ALARM
LF	LF INDICATES LOW FREQUENCY HORN (520Hz)
RD	RD INDICATES RETURN DUCT
SD	SD INDICATES SUPPLY DUCT
SB	SB INDICATES SOUNDER BASE
W	W INDICATES WEATHERPROOF DEVICE

FIRE ALARM SYSTEM GENERAL NOTES

1. PROVIDE ALL MATERIALS, EQUIPMENT, LABOR, DESIGN AND PROGRAMMING FOR THE *MODIFICATION OF A COMPLETE, ADDRESSABLE LOW VOLTAGE 24 VOLT D.C., FULLY OPERATIONAL FIRE ALARM SYSTEM.* ALL EQUIPMENT PROVIDED FOR THIS PROJECT SHALL BE NEW, CURRENTLY MANUFACTURED, AND SHALL BE DELIVERED TO THE PROJECT SITE WITH THE ORIGINAL FACTORY SEAL INTACT. MATERIALS AND WORKMANSHIP SHALL FULLY COMPLY WITH THE REQUIREMENTS OF THE LATEST EDITION OF THE NATIONAL ELECTRICAL CODE (N.F.P.A. #70), NATIONAL FIRE ALARM AND SIGNALING CODE (N.F.P.A. #72), THE LAWS AND REGULATIONS OF WASHINGTON STATE, THE CITY OF GIG HARBOR MUNICIPAL CODE.

1.1. THE NICET DESIGNER SHALL BE RESPONSIBLE FOR DESIGN, LAYOUT, AND COORDINATION OF SHOP DRAWINGS IN ACCORDANCE WITH NFPA #72

1.2. SHOP DRAWINGS

1.2.1. PREPARE DETAILED WORKING DRAWINGS FOR THE SYSTEM LAYOUT IN ACCORDANCE WITH N.F.P.A. #72 AND THE FOLLOWING:

1.2.1.1. SHOP DRAWING REQUIREMENTS: THE INSTALLING VENDOR'S/CONTRACTOR'S COMPLETE AND FULL-SIZE SET OF SHOP DRAWINGS SHALL BE ISSUED IN THE FOLLOWING FORMAT:

a. THEY SHALL BE CLEAR AND LEGIBLE.
b. THE SAME SHEET SIZE AS THE CONTRACT DRAWINGS (I.E. 30" X 42").
c. A MINIMUM OF 1/8" TEXT HEIGHT SHALL BE USED FOR ALL TEXT, SYMBOL TEXT, AND SUBSCRIPT TEXT.
d. SCALE OF DRAWINGS
i. ANY SITE PLAN DRAWINGS SHALL BE THE SAME SCALE AS ISSUED IN THE CONTRACT DOCUMENTS.
ii. FLOOR PLAN DRAWINGS SHALL BE 1/8"=1'-0", UNLESS DIRECTED TO DO OTHERWISE.
e. THE ELECTRICAL LEGEND, WIRE LEGEND, LOAD AND BATTERY CALCULATIONS, RISER DIAGRAM, SEQUENCE OF OPERATION INFO, WIRING DETAILS, AND MOUNTING DETAILS SHALL PRECEDE THE SITE PLANS AND FLOOR PLANS.
f. ALL SHEETS, INCLUDING THE COVER, SHALL INCLUDE A TITLE BLOCK ALONG THE EDGE OF EACH OF THE DRAWINGS THAT, WHEN THE DRAWINGS ARE ROLLED UP, THE FOLLOWING INFORMATION SHALL BE VISIBLE:
g. THE SYSTEM-SPECIFIC SHEET NUMBER
h. PROJECT NAME, SPECIFICATION SECTION NUMBER AND SECTION TITLE NAME
i. FLOOR NAME, AREA, AND/OR SECTION OF THE BUILDING (USE THE NAME OF THE AREA AND/OR FLOOR DESCRIPTION THAT IS ON THE CONTRACT DRAWINGS.)
j. ARCHITECTURAL INFORMATION ON THE CONTRACT DRAWINGS SHALL BE INCLUDED ON THE INSTALLING VENDOR'S/CONTRACTOR'S SHOP DRAWINGS, INCLUDING, BUT NOT LIMITED TO: MATCH LINES, GRID LINES, GRID BUBBLES, KEY PLAN, AND ENLARGED FLOOR PLANS.

2. COORDINATE EXACT LOCATIONS AND MOUNTING HEIGHTS OF ALL WALL MOUNTED DEVICES WITH ARCHITECTURAL ELEVATIONS.

3. CORE DRILLED HOLES SHALL NOT PENETRATE THROUGH ANY STRUCTURAL BEAMS, REBAR CONCRETE SLABS, AND / OR WALLS THAT MAY COMPROMISE THE STRUCTURAL INTEGRITY OF THE BUILDING.

4. WHEN PENETRATING FIRE RATED WALLS, FLOORS, OR CEILINGS, THE CONTRACTOR SHALL UTILIZE APPROVED FIRE RATED PENETRATION METHODS. THE FIRE RATING OF THE WALLS, FLOORS, OR CEILINGS SHALL BE MAINTAINED AFTER THE CONDUIT HAS BEEN INSTALLED.

5. PRIOR TO ROUGH-IN, COORDINATE EXACT LOCATIONS OF FIRE ALARM APPLIANCES AND DEVICES WITH THE GENERAL ELECTRICAL, MECHANICAL, AND FIRE PROTECTION CONTRACTORS.

6. THE GENERAL CONTRACTOR AND FIRE ALARM SYSTEM CONTRACTOR SHALL COORDINATE ALL CUTTING, PATCHING AND FINISH WORK.

7. ALL MANUAL PULL STATIONS SHALL BE DUAL ACTION, KEY OPERABLE. THE USE OF BREAK GLASS FRONT STATIONS ARE NOT ALLOWED.

8. EACH NEW WATER FLOW SWITCH, PRESSURE SWITCH, OR TAMPER SWITCH SHALL HAVE A SEPARATE AND UNIQUE ADDRESS.

9. ALL DEVICES AND DETECTOR BASES SHALL BE PERMANENTLY AND CLEARLY LABELED WITH THE DEVICE ZONE AND DEVICE NUMBER IN CIRCUIT IN A READILY VISIBLE LOCATION DIRECTLY ON THE DEVICE.

FIRE ALARM SYSTEM CABLING AND CONDUIT REQUIREMENTS

1. ALL INITIATING AND NOTIFICATION CIRCUITS SHALL BE "CLASS B" WIRING.

2. ALL "CLASS B" WIRING CIRCUITS SHALL BE PROVIDED WITH AN "END-OF-LINE" RESISTOR INSTALLED AT THE END OF EACH CIRCUIT.

3. THE USE OF T-TAPPING WILL BE ALLOWED ON S.L.C. (SIGNALING LINE CIRCUIT) CIRCUITS ONLY. T-TAPPING IS NOT ALLOWED ON ANY CIRCUIT REQUIRING AN END OF LINE RESISTOR.

4. ALL WIRE TERMINATIONS SHALL BE BY USE OF WIRE NUTS OR SCREW TYPE TERMINATION BLOCKS.

5. THE USE OF CRIMPED CONNECTORS, TWISTING OF WIRES, ETC. SHALL NOT BE ALLOWED IN J-BOXES, TERMINAL CABINETS, OR ENCLOSURES.

6. ALL WIRES OUTSIDE OF J-BOXES, TERMINAL CABINETS, OR ENCLOSURES SHALL BE FREE OF SPLICES.

7. CONDUITS SHALL BE CONCEALED IN CEILING SPACES, WALLS, AND OTHER AREAS WHEREVER POSSIBLE.

8. ALL CONDUIT SHALL BE INSTALLED IN A PARALLEL OR PERPENDICULAR FASHION THAT IS TIGHT TO STRUCTURE. THE CONTRACTOR SHALL COORDINATE ALL CONDUIT ROUTING WITH OTHER TRADES.

9. FIRE ALARM CABLING INSTALLED ABOVE ACCESSIBLE CEILINGS SHALL BE ALLOWED TO BE INSTALLED AS OPEN CABLING. PROVIDE "D" RING HANGER FOR ALL OPEN CABLING AT A MAXIMUM SPACING OF 5'-0" ON CENTER.

10. CABLING THAT IS INSTALLED IN WALLS, CABLING THAT IS INSTALLED BELOW 8'-0" IN ELEVATION THAT IS SUBJECT TO DAMAGE, AND CABLING THAT IS INSTALLED ABOVE INACCESSIBLE CEILINGS SHALL BE INSTALLED IN CONDUIT.

11. CONDUITS PASSING THROUGH BUILDING EXPANSION JOINTS OR BUILDING SEISMIC JOINTS SHALL HAVE JUNCTION BOXES AT EACH SIDE OF THE EXPANSION / SEISMIC JOINT. PROVIDE SECTION OF FLEXIBLE CONDUIT BETWEEN JUNCTION BOXES AND GROUNDING BUSHINGS WITH #12 GROUNDING CABLE TO MAINTAIN CONTINUITY BETWEEN ALL (2) JUNCTION BOXES. PROVIDE FLEX CONDUIT AND GROUNDING CABLE OF SUFFICIENT LENGTH TO ACCOMMODATE THE CALCULATED BUILDING MOVEMENT PLUS 6" OF ADDITIONAL MOVEMENT. PROVIDE QUANTITIES AS REQUIRED FOR THE GYM #115, PLATFORM #122, AND COMMONS AREA #120.

12. ALL EXPOSED SURFACE MOUNTED RACEWAYS IN FINISHED SPACES BELOW 8'-0" IN ELEVATION SHALL BE A MINIMUM OF SERIES 700 METAL WIREMOLD OR EQUAL. THE INSTALLATION OF EXPOSED ELECTRICAL METALLIC TUBING (EMT) IN FINISHED SPACES BELOW 8'-0" IN ELEVATION WILL NOT BE ALLOWED.

13. CONDUITS SHALL NOT EXCEED FILL RATING OF 40% AS DEFINED BY THE LATEST ADOPTED EDITION OF THE NATIONAL ELECTRICAL CODE (N.F.P.A. #70). PROVIDE SIZES AND QUANTITIES AS REQUIRED.

14. CONDUIT SHALL HAVE PAINTED 3/4" WIDE BANDS AT 20'-0" INTERVALS AND WITHIN 1'-0" OF EACH SIDE OF A FLOOR OR A WALL PENETRATION OR SHALL BE INSTALLED IN RED PAINTED CONDUIT.

15. WHERE EXPOSED TO VIEW IN FINISHED SPACES, PAINT ALL NEW CONDUITS, MOUNTING HARDWARE, AND RACEWAYS TO MATCH THE ADJACENT SURFACES.

16. ALL NEW FIRE ALARM SYSTEM JUNCTION BOXES SHALL BE PAINTED RED AND ANNOTATED "FIRE ALARM POWER LIMITED" ON THE COVER IN BLACK BOLD PRINT HAVING MINIMUM CHARACTER FONT SIZE ¼" TALL X ¼" WIDE.

FIRE ALARM SYSTEM AUDIBILITY REQUIREMENTS

1. THE FIRE ALARM SYSTEM CONTRACTOR SHALL PERFORM AUDIBILITY TESTING IN EACH SPACE OF THE BUILDING PRIOR TO ACCEPTANCE TESTING. DOCUMENTATION OF DECIBEL (dB) VALUES RECORDED IN ALL SPACES SHALL BE PROVIDED TO THE ARCHITECT / ENGINEER PRIOR TO ACCEPTANCE TESTING.

A. DECIBEL READINGS SHALL BE TAKEN AT A POINT 10'-0" FROM THE APPLIANCE AT AN ELEVATION OF 5'-0" ABOVE FINISHED FLOOR.

B. THE SOUND LEVEL SHALL BE A MINIMUM OF 15 DECIBELS (dBs) ABOVE THE AVERAGE AMBIENT SOUND LEVEL.

C. THE SOUND LEVEL SHALL BE A MAXIMUM OF 30 DECIBLES (dBs) ABOVE THE AVERAGE AMBIENT SOUND LEVEL.

D. THE SOUND LEVEL SHALL BE A MINIMUM OF 5 DECIBELS (dBs) ABOVE THE MAXIMUM SOUND LEVEL HAVING A MINIMUM DURATION OF 60 SECONDS.

E. IN SPACES THAT DO NOT MEET THE MINIMUM AUDIBLE (dB) VALUES, THE FIRE ALARM SYSTEM CONTRACTOR SHALL PROVIDE ADDITIONAL AUDIBLE NOTIFICATION APPLIANCES UNTIL THE MINIMUM DECIBEL (dB) VALUES ARE OBTAINED.

FIRE ALARM SYSTEM FLOOR PLAN CONSTRUCTION NOTES

1. RELOCATE EXISTING DEVICE

2. DEVICES IN DARK CONTINUOUS LINE TYPE ARE TO BE ADDED AS NEW

FIRE ALARM SYSTEM SCOPE OF WORK NARRATIVE

THE SCOPE OF THIS PROJECT IS TO EXPAND THE FITNESS ROOM AND ADD ONE SLEEPING ROOM. RELOCATE EXISTING DEVICES AND ADD NEW DEVICES AS SHOWN.

THE EXISTING FIRE ALARM PANEL IS A GAMEWELL 7100 ADDRESSABLE CONTROL PANEL.

FIRE ALARM SYSTEM EQUIPMENT REQUIREMENTS

1. THE FIRE ALARM SYSTEM SHALL BE FULLY FUNCTIONAL WITHOUT THE USE OF PRIMARY POWER. THE FIRE ALARM SYSTEM SHALL BE PROVIDED WITH A MINIMUM OF 24 HOURS OF STANDBY OPERATION FOLLOWED BY AN ADDITIONAL 5 MINUTES OF ALARM OPERATION.

2. ALL BATTERIES SHALL PROVIDE AT LEAST 25% SPARE CAPACITY.

3. THE FIRE ALARM SYSTEM CONTROL PANEL (FACP) IS AN EXISTING GAMEWELL BRAND MODEL #7100 AND MAY INCLUDE INTERNAL POWER SUPPLIES. THE FIRE ALARM SYSTEM POWER SUPPLIES (FAPS) ARE SHOWN FOR REFERENCE ONLY. PROVIDE ADDITIONAL QUANTITIES OF POWER SUPPLIES AS REQUIRED FOR A COMPLETE AND FULLY FUNCTIONAL SYSTEM. THE FIRE ALARM SYSTEM CONTRACTOR SHALL BE RESPONSIBLE FOR COORDINATING WITH THE ELECTRICAL CONTRACTOR FOR ALL POWER CONNECTIONS THE FIRE ALARM SYSTEM CONTRACTOR SHALL BE RESPONSIBLE FOR THE ELECTRICAL COSTS ASSOCIATED WITH ALL NON-COORDINATED POWER CONNECTIONS.

4. PROVIDE 25% SPARE CAPACITY FOR NOTIFICATION POWER SUPPLIES.

5. PROVIDE MULTIPLE INITIATING DEVICE CIRCUITS AND SIGNALING LINE CIRCUITS SO THAT FAILURE OF ONE CIRCUIT DOES NOT CAUSE THE FACILITY TO LOSE OVER 50% OF ITS DETECTION CAPABILITY PER FLOOR.

6. PROVIDE A MINIMUM OF 2 ISOLATION MODULES PER CIRCUIT. EACH CIRCUIT SHALL HAVE A MAXIMUM OF 20 DEVICES PER ISOLATION MODULE.

7. PROVIDE BATTERY CALCULATIONS FOR ALL FIRE ALARM SYSTEMS.

RICE fergus MILLER
ARCHITECTURE INTERIORS PLANNING VIZLAB
275 FIFTH STREET, SUITE 100
BREMERTON, WA 98337
360-377-8773
RFMARCH.COM

BCE engineers, inc.
6021 12th Street East, Suite 200
Fife, Washington 98424
T: 253.922.0446
F: 253.922.0896

THOMAS CUMMINGS
STATE OF WASHINGTON
REGISTERED PROFESSIONAL ENGINEER
01/04/2024

STATION 57 ADDITION
GIG HARBOR FIRE AND MEDIC ONE
10521 Crescent Valley Dr. NW
Gig Harbor, Washington

PROJECT # 2022010.03
BID SET
ISSUE DATE 01/08/2024

REVISION SCHEDULE		

FIRE ALARM SYSTEM LEGEND AND NOTES

SHEET #
FA0.01

DATE/ TIME PRINTED: 2/15/2023 10:57:08 AM
(rawj/2022010_03 GHFMO_S3_ARCH_2022_detached.rvt

FIRE ALARM SYSTEM RISER DIAGRAM CONSTRUCTION NOTES

1. THE RISER DIAGRAM IS DIAGRAMMATIC IN NATURE. IT DOES NOT SHOW ALL DEVICES AND DOES NOT REPRESENT ACTUAL CONDUIT OR CABLE ROUTING.
2. THE FIRE ALARM SYSTEM SHALL BE FULLY FUNCTIONAL WITHOUT THE USE OF PRIMARY POWER. THE FIRE ALARM SYSTEM SHALL BE PROVIDED WITH A MINIMUM OF 24 HOURS OF STANDBY OPERATION FOLLOWED BY AN ADDITIONAL 5 MINUTES OF ALARM OPERATION. ALL BATTERIES SHALL BE SIZED TO PROVIDE AT LEAST 20% ADDITIONAL SPARE CAPACITY. SEE THE SPECIFICATIONS FOR ADDITIONAL INFORMATION.
3. PROVIDE ALL NECESSARY EQUIPMENT, INTERFACES, OTHER APPURTENANCES, AND PROGRAMMING AS REQUIRED FOR COMMUNICATION TO THE CENTRAL STATION MONITORING COMPANY OR MONITORING STATION.
4. PROVIDE SYSTEM POWER SUPPLIES, WHERE REQUIRED.
5. PROVIDE SYSTEM CABLES FOR A FULLY FUNCTIONAL SYSTEM, AS REQUIRED.
6. PROVIDE SURGE PROTECTION ON ALL INCOMING PRIMARY POWER SUPPLIES SERVING FIRE ALARM SYSTEM PANELS.
7. ALL WIRE RUN UNDERGROUND SHALL BE SUITABLE FOR WET LOCATIONS.
8. FIRE ALARM SYSTEM CONTRACTOR SHALL PROVIDE CARBON MONOXIDE DETECTION IN SLEEPING AREAS AND NEAR FOSSIL FUEL BURNING EQUIPMENT.

FIRE ALARM SYSTEM SEQUENCE OF OPERATIONS MATRIX

Notes:

1. If "Sequence of Operations" indicated here conflicts with specification, this "Sequence of Operations" supersedes specification sequence.
2. Provide a complete "Sequence of Operations" in accordance with N.F.P.A. #72 and contract documents.
3. This "Sequence of Operations" is considered to be the minimum amount of items required for this project. Provide additional Inputs and/or Outputs as required by the Authority Having Jurisdiction.

System Inputs / System Outputs	Fire Alarm System Control Panel	Annunciate "Alarm Condition" at the Fire Alarm System Control Panel	Annunciate "Alarm Condition" at the Fire Alarm System Remote Annunciator	Transmit "Alarm Signal" to the Central Station Monitoring Company	Annunciate "Trouble Condition" at the Fire Alarm Control Panel	Annunciate "Trouble Condition" at the Fire Alarm Remote Annunciator	Transmit "Trouble Signal" to the Central Station Monitoring Company	Annunciate "Supervisory Condition" at the Fire Alarm Control Panel	Annunciate "Supervisory Condition" at the Fire Alarm Remote Annunciator	Transmit "Supervisory Signal" to the Central Station Monitoring Company	Audible / Visual Notification Appliances	Activate All Fire Alarm System Audible Notification Appliances	Activate All Fire Alarm System Visual Notification Appliances	Immediately Disable All Audio / Visual (A/V), Public Address (P/A), and Intercom Systems	Audible Notification Appliances Operation Maintained until Fire Alarm System Reset	Visual Notification Appliances Operation Maintained until Fire Alarm System Reset	Activation of Carbon Monoxide Detection Sensor shall initiate a tone distinctly different from a Fire Alarm tone and Transmit a Unique Signal to the central station monitoring company	Residential / Living Units	Activate Smoke Detector Sounder Base Alarm in sleeping Unit Room Only	Activate All Smoke Detector Sounder Base Alarms in sleeping Units Only	Activate All Occupant Audible Notification Appliances (except Smoke Detector Sounder Base Alarms) in All sleeping Units in the Building	Doors Holders	Release All Doors to be Closed	H.V.A.C. Mechanical Systems	Initiate Global H.V.A.C. Unit Shutdown to the Energy Management Control System (EMCS)	Initiate Global Exhaust System Shutdown to the Energy Management Control System (EMCS)	Close all Fire / Smoke Dampers	Immediately Deactivate the High Volume Low Speed (H.V.L.S) Fan	Fire Suppression / Sprinkler Systems	Local Sprinkler System Electric Bell Activation Upon the Flow of Sprinkler System Water	Kitchens	Natural Gas solenoid shutoff for Kitchen Cooking Appliances
Fire Alarm System:																																	
Fire Alarm System Control Panel in Alarm Condition		X	X	X								X	X		X	X					X		X										X
Manual Pull Station		X	X	X								X	X		X	X					X		X										X
Smoke Detector		X	X	X								X	X		X	X					X		X		X		X						X
Two Smoke Detectors Required to be in Alarm (Sleeping Room)		X	X	X								X	X		X	X					X		X		X		X						X
Heat Detector		X	X	X								X	X		X	X					X		X										X
Fire Alarm System Control Panel in Trouble Condition					X	X	X																										
Fire Alarm System Control Panel in Supervisory Condition								X	X	X																							
Carbon Monoxide Sensor in Mechanical Rooms with Fossil Fuel Burning		X	X	X								X	X		X	X	X																X
Carbon Monoxide Sensor in Kitchens with Fossil Fuel Burning Equipment		X	X	X								X	X		X	X	X																X
Fire Alarm Control Panel Bypass														X																			
Residential / Living Unit Smoke Detectors:																																	
Smoke Detector with Sounder Base (Multiple Rooms in sleeping Unit)		X	X	X																X							X	X					
Smoke Detector with Sounder Base (Single Room Type Sleeping Unit)								X	X	X								X									X	X					
Smoke Detector / Carbon Monoxide Combination Sensor in Dwelling Unit									X								X										X						X
Tampering of any sleeping Unit Smoke Detector with Sounder Base								X	X	X																							
Smoke Clears Chamber of Detector																																	
Smoke Detectors for Door Hold Opens:																																	
Smoke Detectors to Close Doors		X	X	X								X	X										X		X	X	X						
Smoke Detectors for Fire / Smoke Damper Actuation																																	
Smoke Detectors to Close Fire / Smoke Dampers		X	X	X								X	X		X	X					X		X										
Wet Pipe Automatic Fire Protection Sprinkler Systems:																																	
Water Flow Switch		X	X	X								X	X		X	X					X		X					X		X			
Control Valve Tamper Switch								X	X	X																							
Post Indicating Valve Tamper Switch								X	X	X																							
Dry Pipe Automatic Fire Protection Sprinkler Systems:																																	
Activation of Pressure Switch – Alarm (Loss of Air Pressure)		X	X	X								X	X		X	X					X		X					X		X			
Activation of Pressure Switch – Supervisory Air (Low System Air Pressure)								X	X	X																							
Control Valve Tamper Switch								X	X	X																							
Post Indicating Valve Tamper Switch								X	X	X																							

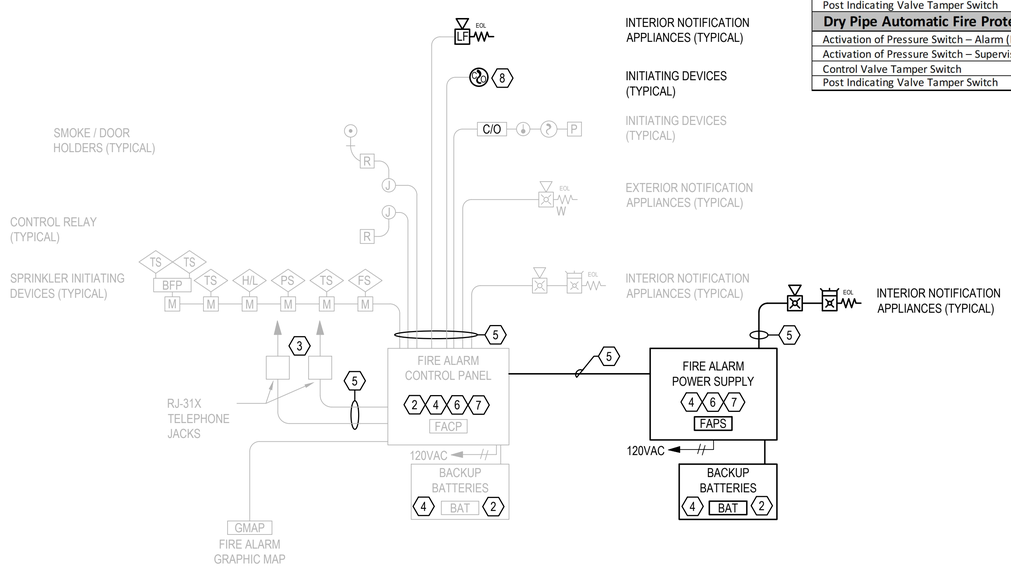

FIRE ALARM SYSTEM TRANSMITTER ZONE SCHEDULE

ZONE #	DESCRIPTION
1	MANUAL PULL STATION ALARM
2	SMOKE DETECTOR ALARM
3	HEAT DETECTOR ALARM
4	WATER FLOW ALARM
5	TAMPER SWITCH SUPERVISORY SIGNAL
6	CARBON MONOXIDE DETECTOR ALARM
7	SLEEPING UNIT SMOKE DETECTOR SUPERVISORY SIGNAL
8	SLEEPING UNIT SMOKE DETECTOR ALARM SIGNAL
9	FIRE ALARM PANEL TROUBLE SIGNAL
10	FIRE ALARM PANEL SUPERVISORY SIGNAL
11	COMMON TROUBLE
12	SPARE
13	SPARE
14	SPARE
15	SPARE
16	SPARE

1 FIRE ALARM SYSTEM RISER DIAGRAM
DIAGRAMMATIC

RICE fergus MILLER
ARCHITECTURE INTERIORS PLANNING VIZLAB
275 FIFTH STREET, SUITE 100
BREMERTON, WA 98337
360-377-8773
RFMARCH.COM

BCE engineers, inc.
6021 12th Street East, Suite 200
Fife, Washington 98424
T: 253.922.0446
F: 253.922.0896

THOMAS CUMMINGS STATE OF WASHINGTON 20120 REGISTERED PROFESSIONAL ENGINEER 01/04/2024

STATION 57 ADDITION
GIG HARBOR FIRE AND MEDIC ONE
10521 Crescent Valley Dr. NW
Gig Harbor, Washington

PROJECT #	2022010.03
BID SET	
ISSUE DATE	01/08/2024

REVISION SCHEDULE

FIRE ALARM SYSTEM RISER AND SEQUENCE OF OPERATIONS MATRIX

SHEET #
FA0.02

DATE/ TIME PRINTED: 2/15/2023 10:57:08 AM
(\\sea\2022010_03 GHFMO_S3_ARCH_2022_detached.rvt)

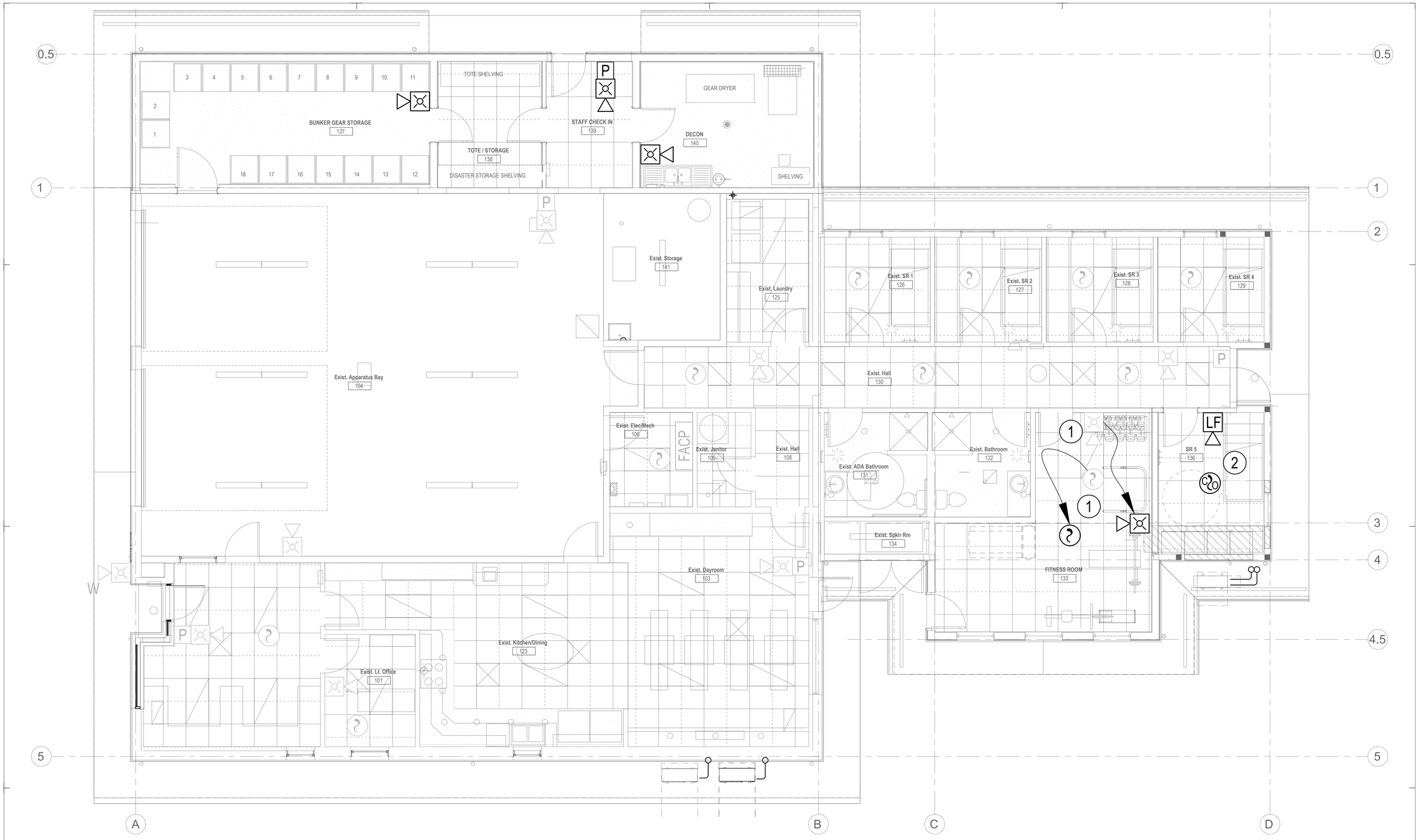

1 FIRE ALARM SYSTEM - FIRST FLOOR

SCALE: 1/4"=1'-0"

N

4' 2' 0 4' 8'

SCALE: 1/4" = 1'-0"

GENERAL NOTES

1. SEE SHEET FA001 FOR FIRE ALARM SYSTEM EQUIPMENT REQUIREMENTS, AUDIBILITY REQUIREMENTS, CABLING AND CONDUIT REQUIREMENTS, FLOOR PLAN GENERAL AND FLOOR PLAN CONSTRUCTION NOTES.
2. SEE SHEET FA002 FOR FIRE ALARM SYSTEM RISER DIAGRAM AND NOTES.
3. CEILING TYPES ARE SHOWN FOR REFERENCE ONLY AND ARE NOT PROVIDED TO INDICATE EXACT LAYOUTS.
4. CEILING MOUNTED DEVICES SHALL BE INSTALLED AT THE QUARTER POINT OR CENTER POINT OF 4'X2' ACOUSTICAL CEILING TILES AND CENTER POINT OF 2'X2' OR 1'X1' ACOUSTICAL CEILING TILES. FA SHEETS MAY NOT DEPICT THIS INSTALLATION DUE TO REFLECTED CEILING PLAN SHOWN BEING DIAGRAMMATICAL TO INDICATE CEILING TYPES, NOT EXACT ACOUSTICAL TILE LAYOUTS.
5. THE FIRE ALARM SYSTEM CONTRACTOR SHALL COORDINATE THE FIRE ALARM SYSTEM INSTALLATION WITH EXISTING ARCHITECTURAL FEATURES, H.V.A.C. GRILLES, ELECTRICAL LIGHTS, FIRE PROTECTION SPRINKLER HEADS, AND/OR EXISTING CONDITIONS.

RICE fergus MILLER
ARCHITECTURE INTERIORS PLANNING VIZLAB
275 FIFTH STREET, SUITE 100
BREMERTON, WA 98337
360-377-8773
RFMARCH.COM

BCE engineers, inc.
6021 12th Street East, Suite 200
Fife, Washington 98424
T: 253.922.0446
F: 253.922.0896

THOMAS CUMMINGS
STATE OF WASHINGTON
20020
REGISTERED
PROFESSIONAL ENGINEER
01/04/2024

STATION 57 ADDITION
GIG HARBOR FIRE AND MEDIC ONE

10521 Crescent Valley Dr. NW
Gig Harbor, Washington

PROJECT #	2022010.03
BID SET	
ISSUE DATE	01/08/2024

REVISION SCHEDULE

FIRE ALARM SYSTEM - FIRST FLOOR

SHEET #

FA1.01

DATE/ TIME PRINTED: 2/15/2023 10:57:08 AM
(rawi2022010_03 GHFMO_S3_ARCH_2022_detached.rvt