GIG HARBOR FIRE AND MEDIC ONE

HQ INTERIOR IMPROVEMENTS and ROOF REPAIRS

ADDENDUM # 01

November 01, 2024

TO ALL BIDDERS:

The Bid Documents issued October 22, 2024 for the project noted above are amended by this Addendum # 01

Receipt of this addendum shall be acknowledged by inserting its number in the space provided on the bid form.

PROJECT MANUAL ITEMS

DRAWINGS

STRUCTURAL

ITEM 1. Si00.01, General Structural Notes: Revise drawing.
ITEM 2. Si00.02, General Structural Notes: Revise drawing.
ITEM 3. Si00.03, General Structural Notes & Special Inspection Schedules: Revise drawing.
ITEM 4. Si22.00, Lower-Level Foundation Plan: Revised drawing.
ITEM 5. Si22.01, Main Level Foundation Plan: Revised drawing.
ITEM 6. Si22.02, Upper-Level Framing Plan: Revised drawing.
ITEM 7. Si22.03, Roof framing Plan: Revised drawing.
ITEM 8. Si41.01, Sections and Details.
ITEM 9. Si41.02, Sections and Details.

ATTACHMENTS

Structural Sheets (9 pages total)

1. Si00.01
2. Si00.02
3. Si00.03
4. Si22.00
5. Si22.01
6. Si22.02
7. Si22.03
8. Si41.01
9. Si41.02

END OF ADDENDUM # 01

GENERAL

DRAWINGS INDICATE GENERAL AND TYPICAL DETAILS OF CONSTRUCTION. TYPICAL DETAILS AND NOTES SHOWN ON THESE DRAWINGS ARE PART OF THE CONSTRUCTION CONTRACT AND SHALL BE PROVIDED BY THE CONTRACTOR. TYPICAL DETAILS MAY NOT NECESSARILY BE INDICATED ON THE PLANS BUT SHALL APPLY AS SHOWN OR DESCRIBED IN THE DETAILS AND NOTES. WHERE CONDITIONS ARE NOT SPECIFICALLY INDICATED BUT ARE OF SIMILAR CHARACTER TO DETAILS SHOWN, SIMILAR DETAILS OF CONSTRUCTION SHALL BE USED.

STRUCTURAL DRAWINGS SHALL BE USED IN CONJUNCTION WITH ARCHITECTURAL DRAWINGS AND ALL OTHER CONTRACT DOCUMENTS FOR BIDDING AND CONSTRUCTION. CONTRACTOR SHALL VERIFY DIMENSIONS AND CONDITIONS FOR COMPATIBILITY AND SHALL NOTIFY ARCHITECT OF ALL DISCREPANCIES PRIOR TO CONSTRUCTION.

DISCREPANCIES: IN CASE OF DISCREPANCIES BETWEEN DRAWINGS, SPECIFICATIONS, REFERENCE STANDARDS, OR GOVERNING CODE, THE MORE STRINGENT REQUIREMENTS SHALL GOVERN. CONTRACTOR SHALL NOTIFY THE ENGINEER OF DISCREPANCIES AND OBTAIN DIRECTION PRIOR TO PROCEEDING. NOTES ON INDIVIDUAL STRUCTURAL DRAWINGS SHALL TAKE PRIORITY OVER GENERAL STRUCTURAL NOTES. DIMENSIONS NOTED IN THE DRAWINGS SHALL BE FOLLOWED, EXCEPT WHERE EXISTING CONDITIONS MUST BE VERIFIED BY THE CONTRACTOR. DO NOT SCALE DRAWINGS.

SPECIFICATIONS: REFER TO SPECIFICATIONS FOR INFORMATION IN ADDITION TO THESE NOTES AND DRAWINGS.

ARCHITECTURAL: REFER TO ARCHITECTURAL DRAWINGS FOR ELEVATIONS, SLOPES, DEPRESSIONS, NON-BEARING WALLS, FASCIA, ELEVATORS, STAIRS, CURBS, DRAINS, RAILINGS, WATERPROOFING, FINISHES, ETC.

CONTRACTOR-INITIATED CHANGES: SHALL BE SUBMITTED IN WRITING TO THE ARCHITECT FOR APPROVAL AT LEAST 10 WORKING DAYS PRIOR TO FABRICATION AND CONSTRUCTION. CHANGES SHOWN ON SHOP DRAWINGS OR SUBMITTALS ONLY WILL NOT SATISFY THIS REQUIREMENT.

CONTRACTOR RESPONSIBILITIES: DRAWINGS REPRESENT DESIGN OF STRUCTURE IN COMPLETED FORM. CONTRACTOR SHALL BE RESPONSIBLE FOR METHODS, SEQUENCES, AND SAFETY PRECAUTIONS REQUIRED TO PERFORM WORK.

CONTRACTOR SHALL DESIGN AND PROVIDE TEMPORARY SHORING AND BRACING OF ALL STRUCTURAL MEMBERS, EXISTING CONSTRUCTION, AND SOIL EXCAVATION AS REQUIRED. SHORING AND BRACING SHALL NOT BE REMOVED UNTIL ALL FINAL CONNECTIONS HAVE BEEN COMPLETED IN ACCORDANCE WITH THE DRAWINGS, AND MATERIALS HAVE ACHIEVED DESIGN STRENGTH.

EXISTING CONDITIONS: CONTRACTOR SHALL VERIFY ALL EXISTING DIMENSIONS, MEMBER SIZES, AND CONDITIONS PRIOR TO COMMENCING ANY WORK. ALL DIMENSIONS OF EXISTING CONSTRUCTION SHOWN ON THE DRAWINGS ARE INTENDED AS GUIDELINES ONLY AND MUST BE VERIFIED. EXISTING CONDITIONS SHOWN ON DRAWINGS ARE BASED EITHER ON SITE OBSERVATIONS, ORIGINAL DRAWINGS, OR WERE ASSUMED BASED ON EXPECTED CONDITIONS. IF EXISTING CONDITIONS DO NOT CLOSELY MATCH CONDITIONS SHOWN ON DRAWINGS, OR IF EXISTING MATERIALS ARE OF QUESTIONABLE OR SUBSTANDARD QUALITY, NOTIFY ENGINEER PRIOR TO COMMENCING ANY WORK.

STRUCTURAL OBSERVATION SHALL BE PERFORMED PER IBC SECTION 1704.6.

SPECIAL INSPECTION PER IBC SECTION 1704, SHALL BE PERFORMED BY AN AGENCY APPROVED BY THE BUILDING OFFICIAL SELECTED BY THE CONTRACTOR AND AS OUTLINED IN THE STRUCTURAL INSPECTION SCHEDULE.

CODES

BUILDING CODE: ALL MATERIALS, WORKMANSHIP, DESIGN, AND CONSTRUCTION SHALL CONFORM TO THE DRAWINGS, SPECIFICATIONS AND THE INTERNATIONAL BUILDING CODE (IBC), 2021 EDITION ,AS AMENDED BY THE STATE OF WASHINGTON.

RISK CATEGORY: IV (IBC TABLE 1604.5) 1

THE EXISTING STRUCTURE DOES NOT CONFORM TO PRESENT EARTHQUAKE CODE REQUIREMENTS. IT HAS BEEN REINFORCED IN ACCORDANCE WITH THE INTERNATIONAL EXISTING BUILDING CODE (IEBC), PER SECTION 101.4.7 OF THE INTERNATIONAL BUILDING CODE (IBC), 2021 EDITION, AND IS WITHIN THE CURRENT PRACTICE FOR THE RENOVATION OF EXISTING BUILDINGS OF THIS AGE AND TYPE OF CONSTRUCTION.

STANDARDS: REFERENCE TO ASTM AND OTHER STANDARDS SHALL MEAN THE LATEST EDITION REFERENCED IN THE 2021 IBC EDITION IN EFFECT ON THE BID DATE, UNLESS NOTED IN THESE DOCUMENTS OR DESIGNATED BY THE GOVERNING CODE.

DESIGN CRITERIA

FLOOR DESIGN DATA:

IN ADDITION TO THE SELF WEIGHT, THE FOLLOWING LOADS ARE USED FOR DESIGN:

	UNIFORM LIVE LOAD (PSF)	CONCENTRATED LIVE LOAD (LBS)	SUPERIMPOSED DEAD LOAD (PSF)	REDUCIBLE (SEE NOTE)
ACCESS FLOOR SYSTEMS, OFFICE	50	2,000	-	YES
ASSEMBLY AREAS, FIXED SEATS	60	-	5	NO
ASSEMBLY AREAS, PLATFORMS MOVEABLE SEATS/LOBBIES	100	-	5	NO
OFFICES	50 + PARTITIONS	2,000	5	YES
OFFICE BUILDING LOBBIES AND FIRST FLOOR CORRIDORS	100	2,000	5	YES
OFFICE BUILDING UPPER FLOOR CORRIDORS	80	2,000	5	YES
OFFICE PARTITIONS	15	-	-	NO
STAIRS	100	300	5	YES

SNOW DESIGN DATA:

GROUND SNOW LOAD	P_g = 25 PSF (ASCE 7 SECTION 7.2)
FLAT-ROOF SNOW LOAD	P_f = 25 PSF MIN UNIFORM SNOW LOAD BASED ON SEAW WHITE PAPER 8-2010 AND I_S
ROOF SLOPE FACTOR	C_s = 1.0 (ASCE 7 SECTION 7.4)
SNOW EXPOSURE FACTOR	C_e = 1.0 (ASCE 7 TABLE 7.3-1)
SNOW LOAD IMPORTANCE FACTOR	I_S = 1.0 (ASCE 7 TABLE 1.5-2)
THERMAL FACTOR	C_t = 1.0 (ASCE 7 TABLE 7.3-2)

WIND DESIGN DATA:

ANALYTICAL PROCEDURE	ENVELOPE PROCEDURE, ASCE 7 CHAPTER 28
TYPE OF STRUCTURE	FLEXIBLE (ASCE 7 SECTION 26.2)
BASIC WIND SPEED	V = 110 MPH, ULTIMATE 3 SECOND GUST (ASCE 7 FIG 26.5-1A - 26.5-1D) V_{ASD} = 85 MPH, NOMINAL 3 SECOND GUST (IBC EQUATION 16-17)
EXPOSURE CATEGORY	C (ASCE 7 SECTION 26.7.3)
INTERNAL PRESSURE COEFFICIENT	0.18 (ASCE 7 TABLE 26.13-1)
ENCLOSURE CLASSIFICATION	ENCLOSED (ASCE 7 SECTION 26.2)
COMPONENTS & CLADDING DESIGN PRESSURES (STRENGTH LEVEL)**	WALLS: 32 PSF ; ROOF: 50 PSF (ASCE 7 SECTION 30.3.2)

**COMPONENTS & CLADDING WIND PRESSURES LISTED ABOVE ARE BASED ON 10 SQUARE FOOT TRIBUTARY AREAS NEAR WALL CORNERS AND ROOF EDGES (EXCLUDING CORNER ZONES). REDUCED DESIGN PRESSURES MAY BE CALCULATED IN ACCORDANCE WITH ASCE 7-16 CHAPTER 30.

EARTHQUAKE DESIGN DATA:

SEISMIC-FORCE-RESISTING SYSTEM:	LIGHT FRAMED WOOD SHEAR WALLS
ANALYTICAL PROCEDURE:	EQUIVALENT LATERAL FORCE PROCEDURE
SEISMIC IMPORTANCE FACTOR I_e	1.5 (ASCE 7 TABLE 1.5-2) 1
SITE CLASS	D (ASCE 7 SECTION 11.4)
S_S	= 1.518 (ASCE 7 SECTION 11.4.2)
S_1	= 0.531 (ASCE 7 SECTION 11.4.2)
S_{DS}	= 1.010 (ASCE 7 SECTION 11.4.5)
S_{D1}	= 0.630 (ASCE 7 SECTION 11.4.5)
SEISMIC DESIGN CATEGORY	D (ASCE 7 SECTION 11.6)
RESPONSE MODIFICATION COEFFICIENT	R = 6.5 (ASCE 7 TABLE 12.2-1)
SYSTEM OVERSTRENGTH FACTOR	Ω_0 = 2.5 (ASCE 7 TABLE 12.2-1)
DEFLECTION AMPLIFICATION FACTOR	C_d = 4 (ASCE 7 TABLE 12.2-1)

GEOTECHNICAL

SOIL BEARING SURFACES AND FILL SHALL BE PREPARED IN ACCORDANCE WITH THE GEOTECHNICAL REPORT AND INSPECTED BY THE OWNER APPOINTED GEOTECHNICAL ENGINEER OR AN APPROVED TESTING AGENCY.

FOOTINGS SHALL BEAR ON FIRM, UNDISTURBED EARTH OR CONTROLLED, COMPACTED STRUCTURAL FILL AT LEAST 18" BELOW LOWEST ADJACENT EXTERIOR FINISHED GRADE. FOOTING DEPTHS AND ELEVATIONS SHOWN ON DRAWINGS ARE MINIMUM AND FOR GUIDANCE ONLY; CONTRACTOR SHALL ESTABLISH ACTUAL ELEVATIONS IN FIELD. BACKFILL BEHIND ALL WALLS WITH FREE DRAINING, GRANULAR FILL AND PROVIDE FOR SUBSURFACE DRAINAGE IN AN APPROVED MANNER.

SOIL PROFILE TYPE	SITE CLASS "D"
ALLOWABLE VERTICAL DESIGN PRESSURE	1500 PSF

SUBMITTALS

SHOP DRAWINGS SHALL BE SUBMITTED TO THE ARCHITECT FOR REVIEW PRIOR TO FABRICATION OR CONSTRUCTION OF THESE ITEMS:

GLUED-LAMINATED MEMBERS 1

CONTRACTOR SHALL REVIEW AND STAMP SUBMITTALS PRIOR TO SUBMISSION. DIMENSIONS AND QUANTITIES ARE CONTRACTOR'S RESPONSIBILITY AND WILL NOT BE REVIEWED. CONTRACTOR SHALL BE RESPONSIBLE FOR ALL MATERIALS PLACED PRIOR TO RECEIPT OF REVIEWED SHOP DRAWINGS. CONTRACTOR SHALL ALLOW A MINIMUM OF 10 WORKING DAYS FOR REVIEW.

SHOP DRAWING SUBMITTALS PROCESSED BY THE ENGINEER ARE NOT CHANGE ORDERS. THE PURPOSE OF SHOP DRAWING SUBMITTALS BY THE CONTRACTOR IS TO DEMONSTRATE TO THE ENGINEER THAT THE CONTRACTOR UNDERSTANDS THE DESIGN CONCEPT BY INDICATING WHICH MATERIAL IS INTENDED TO BE FURNISHED AND INSTALLED AND BY DETAILING THE INTENDED FABRICATION AND INSTALLATION METHODS. IF DEVIATIONS, DISCREPANCIES, OR CONFLICTS BETWEEN SHOP DRAWING SUBMITTALS AND THE CONTRACT DOCUMENTS ARE DISCOVERED EITHER PRIOR TO OR AFTER SHOP DRAWING SUBMITTALS ARE PROCESSED BY THE ENGINEER, THE DESIGN DRAWINGS AND SPECIFICATIONS SHALL CONTROL AND SHALL BE FOLLOWED.

DEFERRED SUBMITTALS: DRAWINGS AND CALCULATIONS FOR BIDDER-DESIGNED COMPONENTS, SEALED BY THE WASHINGTON STATE REGISTERED PROFESSIONAL STRUCTURAL ENGINEER RESPONSIBLE FOR THE DESIGN, SHALL BE SUBMITTED TO THE ARCHITECT FOR REVIEW OF GENERAL CONFORMANCE WITH THE DESIGN OF THE BUILDING. DEFERRED SUBMITTALS INCLUDE:

1 SEISMIC BRACING AND ANCHORAGE OF UNITS MECHANICAL, ELECTRICAL AND PLUMBING AND FIXTURES

SUBMITTALS OF BIDDER-DESIGNED COMPONENTS SHALL INCLUDE LOCATIONS, MAGNITUDES, AND DIRECTIONS OF ALL FORCES TRANSFERRED TO THE STRUCTURE. CALCULATIONS SUBMITTED FOR BIDDER-DESIGNED COMPONENTS ARE FOR INFORMATION ONLY AND WILL NOT BE REVIEWED.

SEISMIC BRACING AND ANCHORAGE OF MECHANICAL UNITS AND OTHER MECHANICAL AND ELECTRICAL FIXTURES SHALL BE DESIGNED BY A REGISTERED STRUCTURAL ENGINEER IN THE STATE WHERE THE PROJECT IS LOCATED. THE MECHANICAL AND ELECTRICAL CONTRACTORS MUST RETAIN THE SERVICES OF A STRUCTURAL ENGINEER AND SHALL BE RESPONSIBLE FOR ALL COSTS RELATED TO THE PURCHASE AND INSTALLATION OF SEISMIC BRACING AND ANCHORAGE OF THEIR SYSTEMS.

RENOVATION:

DEMOLITION: CONTRACTOR SHALL VERIFY ALL EXISTING CONDITIONS BEFORE COMMENCING ANY DEMOLITION. SHORING SHALL BE INSTALLED TO SUPPORT EXISTING CONSTRUCTION AS REQUIRED AND IN A MANNER SUITABLE TO THE WORK SEQUENCES. EXISTING REINFORCING SHALL BE SAVED WHERE POSSIBLE AND AS NOTED ON DRAWINGS. SAW-CUTTING, IF AND WHERE USED, SHALL NOT CUT EXISTING REINFORCING THAT IS TO BE SAVED. DEMOLITION DEBRIS SHALL NOT BE ALLOWED TO DAMAGE OR OVERLOAD THE EXISTING STRUCTURE. CONSTRUCTION LOADING (INCLUDING DEMOLITION DEBRIS) ON EXISTING FLOOR SYSTEMS SHALL BE LIMITED TO 40 PSF.

1. ALL NEW OPENINGS THROUGH EXISTING WALLS, SLABS, AND BEAMS SHALL BE ACCOMPLISHED BY SAW-CUTTING WHEREVER POSSIBLE. ALL NEW OPENINGS SHALL BE SAWCUT NEAT AND CLEAN; NO OVERCUTTING AT OPENING CORNERS SHALL BE ALLOWED, UNLESS NOTED OTHERWISE. AS REQUIRED, CORE DRILL CORNERS AND CHIP, GRIND, OR CUT THE CORNERS TO PROVIDE REQUIRED DIMENSIONS.
2. CONTRACTOR SHALL VERIFY ALL EXISTING CONDITIONS AND LOCATION OF MEMBERS PRIOR TO CUTTING ANY OPENINGS.
3. SMALL ROUND OPENINGS SHALL BE ACCOMPLISHED BY CORE DRILLING.

EXISTING TIMBER CONSTRUCTION: CONTRACTOR SHALL CHECK FOR DRYROT AT ALL EXTERIOR WALLS, EXISTING TOILET ROOM FLOORS AND WALLS, AREAS SHOWING WATER STAINS, AND ALL WOOD MEMBERS IN BASEMENT AND CRAWL SPACES. ALL ROT SHALL BE REMOVED AND DAMAGED MEMBERS SHALL BE REPLACED OR REPAIRED AS DIRECTED BY THE ENGINEER.

EXISTING REBAR SCANNING: THE GENERAL CONTRACTOR SHALL SELECT THE APPROPRIATE SCANNING METHODS BASED ON CONSTRUCTION MEANS AND METHODS REQUIRED TO INSTALL POST-INSTALLED ANCHORS IN ACCORDANCE WITH DETAILS. GROUND-PENETRATING RADAR, X-RAY, AND MAGNETIC-BASED METHODS ARE ALL ACCEPTABLE METHODS OF SCANNING. HOWEVER, CERTAIN METHODS MAY HAVE LIMITATIONS AND THE APPROPRIATE METHODS AND EQUIPMENT MUST BE DETERMINED BY THE CONTRACTOR PRIOR TO CONSTRUCTION. DO NOT CUT, DAMAGE, OR REMOVE EXISTING REBAR TO INSTALL ANCHORS.

NON-SHRINK GROUT SHALL HAVE A MINIMUM COMPRESSIVE STRENGTH OF 6,000 PSI AT 28 DAYS, BUT NOT LESS THAN THE MATERIAL ON WHICH IT IS PLACED UPON.

1

RICE fergus MILLER
ARCHITECTURE INTERIORS PLANNING VIZLAB
275 FIFTH STREET, SUITE 100
BREMERTON, WA 98337
360-377-8773
RFMARCH.COM

Reid Middleton
728 134th Street SW, Suite 200
Everett, Washington 98204
Ph: 425.741.3800
www.reidmiddleton.com

© Copyright 2024 Reid Middleton, Inc.

KATHERINE R. KRALL
STATE OF WASHINGTON
49667
STRUCTURAL ENGINEER
PROFESSIONAL ENGINEER
10/28/24

HQ INTERIOR OFFICE REMODEL & ROOF REPAIRS
GIG HARBOR FIRE AND MEDIC ONE
10222 BUJACICH ROAD NW
GIG HARBOR, WA 98332

PROJECT # 262024.076

BID SET

ISSUE DATE OCTOBER 22, 2024

REVISION SCHEDULE

1	ADDENDUM 01	11/1/2024

AHJ APPROVAL STAMP

GENERAL STRUCTURAL NOTES

SHEET #
Si00.01

CONCRETE ANCHORAGE

EXPANSION BOLTS INTO CONCRETE SHALL BE ONE OF THE FOLLOWING. INSTALL PER MANUFACTURER'S INSTRUCTIONS AND APPLICABLE IAPMO OR ICC-ES REPORTS. NOMINAL EMBEDMENT DEPTH SHALL BE AS NOTED BELOW, UNLESS NOTED OTHERWISE.

HILTI KWIK BOLT TZ2 (ESR-4266)	
3/8" EXPANSION BOLTS	3"
1/2" EXPANSION BOLTS	3 3/4"
5/8" EXPANSION BOLTS	4 1/2"
3/4" EXPANSION BOLTS	5 1/2"
SIMPSON STRONG-BOLT 2 (ESR 3037)	
3/8" EXPANSION BOLTS	2 7/8"
1/2" EXPANSION BOLTS	3 7/8"
5/8" EXPANSION BOLTS	5 1/8"
3/4" EXPANSION BOLTS	5 3/4"
DEWALT POWER STUD+ SD2 (ESR 2502)	
3/8" EXPANSION BOLTS	2 3/8"
1/2" EXPANSION BOLTS	3 3/4"
5/8" EXPANSION BOLTS	4 7/8"
3/4" EXPANSION BOLTS	5 3/4"

EPOXY-GROUTED RODS OR REBAR TO CONCRETE SHALL BE GROUTED WITH ONE OF THE FOLLOWING: SIMPSON SET-3G (ESR-4057), DEWALT PURE110+ (ESR-3298), OR HILTI HIT-HY200 (ESR-3187). INSTALL PER MANUFACTURER'S INSTRUCTIONS AND APPLICABLE IAPMO OR ICC-ES REPORTS. HOLES DRILLED FOR EPOXY GROUTED INSTALLATIONS SHALL NOT BE CORE-DRILLED UNLESS SPECIFICALLY APPROVED BY THE STRUCTURAL ENGINEER AND ROUGHENED PER THE ADHESIVE MANUFACTURER'S RECOMMENDATIONS. HOLES SHALL ALSO NOT BE WATER-FILLED UNLESS SPECIFICALLY APPROVED BY THE STRUCTURAL ENGINEER. HOLES DRILLED FOR EPOXY GROUTED INSTALLATIONS SHALL BE KEPT DRY PRIOR TO ADHESIVE INJECTION, UNLESS OTHERWISE APPROVED BY THE STRUCTURAL ENGINEER.

EMBEDMENT DEPTHS SHALL BE AS NOTED BELOW, UNLESS NOTED OTHERWISE.

3/8" ROD OR #3 BAR	4"
1/2" ROD OR #4 BAR	5"
5/8" ROD OR #5 BAR	7"
3/4" ROD OR #6 BAR	9"
7/8" ROD OR #7 BAR	12"
1" ROD OR #8 BAR	15"

HEAVY DUTY SCREW ANCHORS INTO CONCRETE SHALL BE SIMPSON TITEN HD (ESR-2713), DEWALT SCREW-BOLT+ (ESR-3889) OR HILTI KWIK KH-EZ (ESR-3027). STAINLESS STEEL HEAVY DUTY SCREW ANCHORS INTO CONCRETE SHALL BE SIMPSON TITEN HD (ER-493).

POST-INSTALLED ANCHORS SHALL NOT BE USED AS SUBSTITUTES FOR CAST-IN-PLACE ANCHOR BOLTS OR REINFORCING STEEL UNLESS SPECIFICALLY APPROVED BY THE STRUCTURAL ENGINEER.

PRODUCT SUBSTITUTES PROPOSED BY THE CONTRACTOR SHALL BE SUBMITTED FOR REVIEW WITH IAPMO OR ICC-ES REPORTS INDICATING EQUIVALENT OR GREATER LOAD CAPACITIES.

NO REINFORCING BARS SHALL BE CUT TO PLACE POST-INSTALLED ANCHORS. ALL DEFECTIVE ANCHOR HOLES SHALL BE GROUTED WITH FLOWABLE NON-SHRINK, NON-METALLIC, CEMENTITIOUS GROUT WITH MATCHING 28-DAY CONCRETE COMPRESSIVE STRENGTH, AND A NEW HOLE DRILLED A MINIMUM OF 3 BOLT DIAMETERS AWAY.

STEEL

REFERENCE STANDARDS: STRUCTURAL STEEL SHALL CONFORM TO ALL REQUIREMENTS OF THE FOLLOWING DOCUMENTS:

AISC 360	"SPECIFICATION FOR STRUCTURAL STEEL BUILDINGS"
AISC 341	"SEISMIC PROVISIONS FOR STRUCTURAL STEEL BUILDINGS"
AISC 303	"CODE OF STANDARD PRACTICE FOR STEEL BUILDINGS AND BRIDGES"
AWS D1.1	"STRUCTURAL WELDING CODE - STEEL"
AISC 348	"SPECIFICATION FOR STRUCTURAL JOINTS USING ASTM A325 OR A490 BOLTS"
AISC 358	"PREQUALIFIED CONNECTIONS FOR SPECIAL AND INTERMEDIATE STEEL MOMENT FRAMES FOR SEISMIC APPLICATIONS"

MATERIALS:

TYPE OF MEMBER	ASTM SPECIFICATION	YIELD
PLATES, ANGLES, CHANNELS	A36	36 KSI
HOLLOW STRUCTURAL STEEL (HSS)	A500 (GRADE C)	50 KSI
MACHINE BOLTS (MB)	A307	
ANCHOR RODS (AR)	F1554 GRADE 36, WELDABLE	

STEEL FABRICATOR CERTIFICATION: STRUCTURAL STEEL SHALL BE FABRICATED BY AN AISC-CERTIFIED STEEL FABRICATOR. SEE SPECIFICATIONS FOR REQUIREMENTS.

BOLTED CONNECTIONS NOT SPECIFIED AS SLIP-CRITICAL NEED ONLY BE TIGHTENED TO AISC SNUG-TIGHT CRITERIA, UNLESS NOTED OTHERWISE. CONNECTION PLATES SHALL HAVE AISC STANDARD ROUND HOLES UNLESS NOTED OTHERWISE. ALL OVERSIZED OR SLOTTED HOLES SHALL HAVE WASHERS PROVIDED IN ACCORDANCE WITH AISC 360, UNLESS NOTED OTHERWISE.

WELDING: ALL WELDS SHALL COMPLY WITH AWS D1.1. WELDS SHALL BE MADE USING LOW HYDROGEN E70XX ELECTRODES. ONLY AWS PREQUALIFIED WELDED JOINTS SHALL BE USED. SHOP DRAWINGS SHALL SHOW ALL WELDING WITH AWS A2.4 STANDARD SYMBOLS. WELDS SHOWN ON DRAWINGS ARE MINIMUM SIZES. INCREASE WELD SIZE TO AWS MINIMUM SIZES BASED ON PLATE THICKNESS. WELDS NOT SPECIFIED SHALL BE CONTINUOUS 3/16" FILLET WELDS.

1

ALL WELDS INDICATED ON THE DRAWINGS AS "NOTCH TOUGH WELD FILLER MATERIAL REQUIRED" SHALL BE MADE WITH A FILLER WELD METAL THAT HAS A MINIMUM CHARPY V-NOTCH TOUGHNESS OF 20 FT.-LBS. AT 0 DEGREES F. IN ADDITION TO MEETING THE ABOVE REQUIREMENTS, ALL WELDS INDICATED AS "DEMAND CRITICAL" SHALL BE MADE WITH MATERIAL WITH A MINIMUM CHARPY V-NOTCH TOUGHNESS OF 40 FT-LBS AT 70 DEGREES F. SEE AISC 341 CHAPTER A AND AWS D1.8 SECTION 6.3 FOR ADDITIONAL REQUIREMENTS. PROPOSED FILLER MATERIAL FOR BOTH SHOP AND FIELD WELDS SHALL BE SUBMITTED FOR REVIEW PRIOR TO CONSTRUCTION.

WELDS SHOWN ON DRAWINGS ARE FOR FINAL CONNECTIONS. UNLESS FIELD WELD SYMBOLS ARE SHOWN, CONTRACTOR SHALL BE RESPONSIBLE FOR DETERMINING IF A WELD SHOULD BE SHOP OR FIELD WELDED IN ORDER TO FACILITATE STEEL ERECTION.

CONTRACTOR SHALL BE RESPONSIBLE FOR ALL JOINT PREPARATIONS AND WELDING PROCEDURES, INCLUDING ROOT OPENINGS AND FACE DIMENSIONS, GROOVE ANGLES, BACKING BARS, COPES, WELD ACCESS HOLES, TAPERS, AND SURFACE ROUGHNESS.

WELDER CERTIFICATION: AWS OR WASHINGTON ASSOCIATION OF BUILDING OFFICIALS (WABO).

FIREPROOFING: REFER TO SPECIFICATIONS FOR REQUIRED FIREPROOFING AND TO ARCHITECTURAL DRAWINGS FOR REQUIRED FIRE RESISTANCE RATINGS. STRUCTURAL FRAME CONSISTS OF THE COLUMNS; THE GIRDERS, BEAMS, TRUSSES, AND SPANDRELS HAVING DIRECT CONNECTIONS TO THE COLUMNS; AND BRACING MEMBERS DESIGNED TO CARRY GRAVITY LOADS.

HOLE SIZES IN STEEL MEMBERS FOR CONNECTIONS TO CONCRETE OR MASONRY SHALL BE AS FOLLOWS UNLESS SPECIFIED OTHERWISE IN THE DRAWINGS.

ANCHOR TYPE	MAX HOLE DIA OVER NOMINAL BOLT DIA:
EXPANSION ANCHORS	1/16" **
SCREW ANCHORS	1/16" **
EPOXY-GROUTED RODS OR BOLTS	1/8" **

** USE OF LARGER HOLES REQUIRES WELDED PLATE WASHERS AND PRIOR APPROVAL BY THE STRUCTURAL ENGINEER.

1

MASONRY

REFERENCE STANDARDS: MASONRY SHALL CONFORM TO ALL REQUIREMENTS OF THE FOLLOWING DOCUMENTS:

TMS 402-16	"BUILDING CODE REQUIREMENTS FOR MASONRY STRUCTURES"
TMS 602-16	"SPECIFICATIONS FOR MASONRY STRUCTURES"

MASONRY CONSTRUCTION SHALL COMPLY WITH IBC SECTION 2104. MASONRY SHALL BE LAID IN RUNNING BOND UNLESS NOTED OTHERWISE. MASONRY NOT LAID IN RUNNING BOND SHALL BE FULLY GROUTED AND SHALL BE CONSTRUCTED OF HOLLOW OPEN-ENDED UNITS.

ASSEMBLY STRENGTH: CONCRETE MASONRY SHALL HAVE NET AREA COMPRESSIVE STRENGTH f'm = 2,000 PSI. COMPRESSIVE STRENGTH SHALL BE VERIFIED BY UNIT STRENGTH METHOD, IN ACCORDANCE WITH IBC SECTION 2105 AND TMS 602 ARTICLE 1.4 B.2.

HOLLOW BRICK UNITS SHALL BE GRADE SW AND COMPLY WITH ASTM C652.

CONCRETE MASONRY UNITS SHALL BE MEDIUM OR NORMAL-WEIGHT AND SHALL COMPLY WITH ASTM C90 WITH NET AREA COMPRESSIVE STRENGTH OF 2,000 PSI. UNITS SHALL BE PROTECTED FROM EXPOSURE TO MOISTURE PRIOR TO CONSTRUCTION.

MORTAR SHALL BE TYPE S AND SHALL COMPLY WITH ASTM C270. PROPORTIONS SHALL COMPLY WITH IBC 2103.2.1 AND TMS 602 ARTICLES 2.1 AND 2.6A, INCLUDING TABLES SC-1 AND SC-2. MASONRY CEMENT SHALL NOT BE USED. AGGREGATE SHALL COMPLY WITH ASTM C144.

GROUT SHALL CONFORM TO ASTM C476, IBC SECTION 2103.3 AND TMS 602 ARTICLE 2.2 AND 2.6B. GROUT STRENGTH BASED ON 28-DAY TESTS SHALL BE 2,000 PSI, MINIMUM. MORTAR SAND SHALL NOT BE USED. GROUT SHALL BE POURED IN MAXIMUM LIFTS OF 5'-4". GROUT SHALL BE VIBRATED DURING PLACEMENT TO ENSURE THAT CELLS ARE COMPLETELY FILLED. ALL CELLS CONTAINING VERTICAL BARS OR EMBEDDED ITEMS, ALL CELLS BELOW GRADE, AND ALL BOND BEAMS SHALL BE FILLED WITH GROUT. WALLS SHALL BE GROUTED SOLID, UNLESS NOTED OTHERWISE.

REINFORCING STEEL DEFORMED BARS SHALL BE ASTM A615, GRADE 60. LAP BARS 48 DIAMETERSAT SPLICES, UNLESS NOTED OTHERWISE. MINIMUM WALL REINFORCEMENT SHALL BE AS FOLLOWS:

6" WALLS	#4 @ 48" VERT	(2) #4 @ 48" HORIZ
8" WALLS	#5 @ 48" VERT	(2) #5 @ 48" HORIZ
10" WALLS	#6 @ 48" VERT	(2) #5 @ 48" HORIZ
12" WALLS	#6 @ 48" VERT	(2) #6 @ 48" HORIZ

PROVIDE (1) #5 VERTICAL FOR THE FULL HEIGHT OF THE WALL AT EACH SIDE OF OPENINGS, AT WALL CORNERS AND INTERSECTIONS, AND AT FREE ENDS OF WALLS. PROVIDE (2) #5 HORIZONTAL AT ELEVATED FLOOR AND ROOF LINES, AT TOPS OF WALLS, AND ABOVE AND BELOW ALL OPENINGS. ALL HORIZONTAL REINFORCEMENT SHALL BE PLACED IN BOND BEAMS. EXTEND REINFORCEMENT AROUND OPENINGS 2'-0" BEYOND FACE OF OPENING, OR AS FAR AS POSSIBLE, AND HOOK. PROVIDE CORNER BARS TO MATCH HORIZONTAL REINFORCING AT WALL CORNERS AND INTERSECTIONS.

1

WOOD

REFERENCE STANDARDS: WOOD SHALL CONFORM TO ALL REQUIREMENTS OF THE FOLLOWING DOCUMENTS:

ANSI/AWC NDS	"NATIONAL DESIGN SPECIFICATION FOR WOOD CONSTRUCTION"
ANSI/AWC SDPWS	" SPECIAL DESIGN PROVISIONS FOR WIND AND SEISMIC"
AWC WCD No. 4	"WOOD CONSTRUCTION DATA - PLANK AND BEAM FRAMING FOR RESIDENTIAL BUILDINGS"
AWC WFCM	"WOOD FRAME CONSTRUCTION MANUAL FOR ONE- AND TWO-FAMILY DWELLINGS"
ANSI/APA A190.1	"STRUCTURAL GLUED LAMINATED TIMBER"
ANSI 117	"STANDARD SPECIFICATIONS FOR STRUCTURAL GLUED LAMINATED TIMBER OF SOFTWOOD SPECIES"
AWPA C1	"ALL TIMBER PRODUCTS-PRESERVATIVE TREATMENT BY PRESSURE PROCESS"
TPI 1	"NATIONAL DESIGN STANDARD FOR METAL-PLATE-CONNECTED WOOD TRUSS CONSTRUCTION"

ALL WOOD FRAMING DETAILS SHALL BE CONSTRUCTED TO THE MINIMUM STANDARDS OF THE IBC. MINIMUM NAILING SHALL CONFORM TO IBC TABLE 2304.10.2 OR CURRENT ICC-ES REPORT ESR-1539, UNLESS OTHERWISE NOTED. COORDINATE THE SIZE AND LOCATION OF ALL OPENINGS WITH MECHANICAL AND ARCHITECTURAL DRAWINGS. INSTALL WASHERS UNDER THE HEADS AND NUTS OF ALL BOLTS AND LAG SCREWS BEARING ON WOOD. INSTALLATION OF LAG SCREWS SHALL CONFORM TO NDS SECTION 12.1.4, AND INSTALLATION OF BOLTS SHALL CONFORM TO NDS SECTION 12.1.3.

WALL FRAMING: TWO STUDS MINIMUM SHALL BE INSTALLED AT THE ENDS OF ALL WALLS, UNLESS OTHERWISE NOTED. INSTALL SOLID BLOCKING FOR WOOD COLUMNS THROUGH FLOOR SPACES TO SUPPORTS BELOW.

ALL STUD WALLS SHALL HAVE THEIR LOWER WOOD PLATES ATTACHED TO WOOD FRAMING BELOW WITH 16d NAILS AT 12" OC STAGGERED OR BOLTED TO CONCRETE WITH 5/8" DIAMETER ANCHOR BOLTS @ 4'-0"oc PER IBC SECTION 2308.3 (EMBED 7"), UNLESS OTHERWISE NOTED. SILL PLATES SHALL BE ANCHORED WITH A MINIMUM OF TWO ANCHOR BOLTS WITH ONE BOLT NOT MORE THAN 12" OR LESS THAN 4" FROM EACH END OF EACH PIECE. 3" x 3" x 0.229" PLATE WASHERS SHALL BE USED WITH ALL SILL PLATE ANCHOR BOLTS PER IBC SECTION 2308.3.1.1 AND SDPWS SECTION 4.3.6.4.3. INDIVIDUAL MEMBERS OF BUILT-UP STUD POSTS SHALL BE NAILED TO EACH OTHER WITH 16d @ 12"oc STAGGERED.

FLOOR AND ROOF FRAMING: INSTALL DOUBLE JOISTS UNDER ALL PARALLEL PARTITIONS THAT EXTEND OVER MORE THAN HALF THE JOIST LENGTH AND AROUND ALL OPENINGS IN FLOORS OR ROOFS. INSTALL SOLID BLOCKING AT ALL BEARING POINTS. TOENAIL JOISTS TO SUPPORTS WITH TWO 16d NAILS. ATTACH TIMBER JOISTS TO FLUSH HEADERS OR BEAMS WITH SIMPSON METAL JOIST HANGERS IN ACCORDANCE WITH NOTES ABOVE. NAIL ALL MULTI-JOIST BEAMS TOGETHER WITH 16d @ 12" OC STAGGERED.

ROOF, FLOOR & WALL SHEATHING SHALL BE APA RATED, EXTERIOR OR EXPOSURE 1 STRUCTURAL I PLYWOOD OR ORIENTED STRAND BOARD (OSB) IN CONFORMANCE WITH IBC SECTION 2303.1.5. SHEATHING SHALL BE MANUFACTURED UNDER THE PROVISIONS OF VOLUNTARY PRODUCT STANDARDS PS 1-09, PS 2-10, OR APA PRP-108 PERFORMANCE STANDARDS AND POLICIES FOR STRUCTURAL USE PANELS. SEE DRAWINGS FOR THICKNESS, SPAN RATING, AND NAILING REQUIREMENTS. UNLESS OTHERWISE NOTED, WALL SHEATHING SHALL BE 1/2" (NOMINAL) WITH SPAN RATING OF 24/0. GLUE FLOOR SHEATHING TO ALL SUPPORTING MEMBERS WITH ADHESIVE CONFORMING TO APA SPECIFICATION AFG-01.

ROOF AND FLOOR SHEATHING SHALL BE LAID UP WITH GRAIN PERPENDICULAR TO SUPPORTS AND NAILED AS SHOWN ON THE DRAWINGS. INSTALL APPROVED PANEL EDGE CLIPS CENTERED BETWEEN JOISTS/TRUSSES AT UNBLOCKED ROOF SHEATHING EDGES. ALL FLOOR SHEATHING EDGES SHALL HAVE APPROVED TONGUE-AND-GROOVE JOINTS OR SHALL BE SUPPORTED WITH SOLID BLOCKING. ALLOW 1/8" SPACING AT ALL PANEL EDGES AND ENDS OF FLOOR AND ROOF SHEATHING. TOENAIL BLOCKING TO SUPPORTS WITH 16d @ 12" OC. AT BLOCKED FLOOR AND ROOF DIAPHIRAGMS, INSTALL FLAT 2x BLOCKING AT ALL UNFRAMED PANEL EDGES AND NAIL WITH EDGE NAILING SPECIFIED.

ALL PRESSURE-TREATED (P.T.) WOOD MEMBERS SPECIFIED ON THE DRAWINGS SHALL BE PRESSURE-TREATED WITH ALKALINE COPPER QUAT (ACQ) OR COPPER AZOLE (CA) PRESERVATIVES, CATEGORY UC3B, UNLESS OTHERWISE NOTED. WOOD SHALL BE TREATED IN ACCORDANCE WITH AWPA STANDARD U1. AMMONIACAL COPPER ZINC ARSENATE (ACZA) PRESERVATIVE, OR OTHER PRESERVATIVES WITH AMMONIA CARRIERS, SHALL NOT BE USED. SEE GENERAL STRUCTURAL NOTES BELOW FOR MATERIAL REQUIREMENTS OF CONNECTORS AND FASTENERS IN CONTACT WITH PRESSURE-TREATED MEMBERS. INSTALL (2) LAYERS OF ASPHALT-IMPREGNATED BUILDING PAPER BETWEEN UNTREATED LEDGERS, BLOCKING, ETC., AND CONCRETE OR MASONRY.

SAWN LUMBER: SAWN LUMBER SHALL BE IDENTIFIED BY THE GRADE MARK OF A LUMBER GRADING OR INSPECTION AGENCY APPROVED BY AN ACCREDITATION BODY COMPLYING WITH US DEPARTMENT OF COMMERCE PS20. FRAMING LUMBER SHALL BE KILN DRIED OR MC-19, AND GRADED AND MARKED IN CONFORMANCE WITH W.C.L.B. STANDARD GRADING RULES FOR WEST COAST LUMBER NO. 17. SAWN LUMBER SPECIES AND GRADES SHALL BE AS FOLLOWS:

JOISTS: (2x MEMBERS)	DOUGLAS FIR NO. 2 Fb = 900 PSI, Fv = 180 PSI, E = 1,600 KSI
(3x AND 4x MEMBERS)	DOUGLAS FIR NO. 1 Fb = 1,000 PSI, Fv = 180 PSI, E = 1,700 KSI
BEAMS AND STRINGERS: (INCLUDING 6x AND LARGER MEMBERS)	DOUGLAS FIR NO. 1 Fb = 1,350 PSI, Fv = 170 PSI, E = 1,600 KSI
POSTS: (4x MEMBERS)	DOUGLAS-FIR NO. 1 Fc = 1,500 PSI, E = 1,700 KSI
(6x AND LARGER MEMBERS)	DOUGLAS FIR NO. 1 Fc = 1,000 PSI, E = 1,600 KSI
STUDS, PLATES, LEDGERS & MISCELLANEOUS LIGHT FRAMING:	DOUGLAS FIR NO. 2 Fb = 900 PSI, E = 1,600 PSI, Fc = 1,350 PSI, Ft = 575 PSI

GLUED LAMINATED MEMBERS (GLULAMS) SHALL BE MANUFACTURED IN CONFORMANCE WITH ANSI/APA A 190.0 AND ASTM D3737. EACH MEMBER SHALL BEAR AN AITC OR APA IDENTIFICATION MARK AND BE ACCOMPANIED BY AN AITC CERTIFICATE OF CONFORMANCE. GLULAMS SHALL BE INDUSTRIAL GRADE WHERE NOT EXPOSED TO VIEW AND ARCHITECTURAL GRADE WHERE EXPOSED TO VIEW. GLULAMS SHALL HAVE THE STRENGTH GRADES AS NOTED BELOW:

SIMPLE SPAN BEAMS:	DOUGLAS FIR 24F-V4 Fb = 2,400 PSI, Fv = 265 PSI, E = 1,800 KSI
CONTINUOUS OR CANTILEVER BEAMS:	DOUGLAS FIR 24F-V8 Fb = 2,400 PSI, Fv = 265 PSI, E = 1,800 KSI
COLUMNS, TRUSSES: (2 LAMINATIONS)	DOUGLAS FIR 1-DF-L3 Fc = 1,200 PSI, Fbyy = 1,000 PSI, Fbxx = 1,250 PSI, E = 1,500 KSI
(3 LAMINATIONS)	DOUGLAS FIR 1-DF-L3 Fc = 1,200 PSI, Fbyy = 1,250 PSI, Fbxx = 1,250 PSI, E = 1,500 KSI
(4 OR MORE LAMINATIONS)	DOUGLAS FIR 1-DF-L3 Fc = 1,550 PSI, Fbyy = 1,450 PSI, Fbxx = 1,500 PSI, E = 1,500 KSI

HORIZONTAL GLULAM MEMBERS AND INCLINED MEMBERS OF LESS THAN 1:1 SLOPE SHALL HAVE A RADIUSED CAMBER OF 3,500 FT. UNLESS NOTED OTHERWISE.

GLUED LAMINATED MEMBERS EXPOSED TO WEATHER OR MOISTURE SHALL BE TREATED WITH A NON-CORROSIVE, APPROVED PRESERVATIVE.

FIRE-RATED GLUED LAMINATED MEMBERS, DENOTED WITH "FRB", HAS BEEN DESIGNED FOR 1-HOUR FIRE RESISTANCE. FIRE-RATED GLUED LAMINATED MEMBERS SHALL HAVE AN OUTER TENSION LAMINATION SUBSTITUTED FOR A CORE LAMINATION ON THE TENSION SIDE FOR UNBALANCE BEAMS (24F-V4 LAYUPS) AND ON BOTH SIDES FOR BALANCED BEAMS (24F-V8 LAYUPS). SEE NDS CHAPTER 16, FIGURE C16.2.4A, AND FIGURE C16.2.4B FOR REQUIREMENTS.

ENGINEERED LUMBER: EACH PIECE SHALL BEAR A STAMP OR STAMPS NOTING THE NAME AND PLANT NUMBER OF THE MANUFACTURER, THE GRADE, THE NER OR ICC-ES REPORT NUMBER, AND THE QUALITY CONTROL AGENCY. ALL MEMBERS SHALL BE MANUFACTURED WITH AN APPROVED ADHESIVE.

BEAMS:	LAMINATED VENEER LUMBER (LVL) Fb = 2,600 PSI, E = 1,900 KSI, Fv = 285 PSI
	LAMINATED STRAND LUMBER (LSL) Fb = 2,250 PSI, E = 1,500 KSI, Fv = 400 PSI (DEPTH > = 9-1/2") Fb = 1,700 PSI, E = 1,300 KSI, Fv = 400 PSI (DEPTH < 9-1/2")
	PARALLEL STRAND LUMBER (PSL) Fb = 2,900 PSI, E = 2,000 KSI, Fv = 290 PSI
RIM BOARD & BLOCKING:	LAMINATED STRAND LUMBER (LSL) Fb = 1,700 PSI, E = 1,300 KSI, Fv = 400 PSI
STUDS:	LAMINATED VENEER LUMBER (LVL) Fb = 2,400 PSI, E = 1,700 KSI, Fv = 285 PSI, Fc = 3,000 PSI [BOISE CASCADE VERSA STUD] Fb = 2,900 PSI, E = 2,000 KSI, Fv = 285 PSI, Fc = 2,635 PSI [REDBUILT]
	LAMINATED STRAND LUMBER (LSL) Fb = 2,250 PSI, E = 1,500 KSI, Fv = 400 PSI, Fc = 1,950 PSI (WIDTH > 7-1/4") Fb = 1,700 PSI, E = 1,300 KSI, Fv = 400 PSI, Fc = 1,400 PSI (WIDTH < 7-1/4")
POSTS:	PARALLEL STRAND LUMBER (PSL) Fb = 2,400 PSI, E = 1,800 KSI, Fv = 290 PSI, Fc = 2,500 PSI

RICE fergus MILLER
ARCHITECTURE INTERIORS PLANNING VIZLAB
275 FIFTH STREET, SUITE 100
BREMERTON, WA 98337
360-377-8773
RFMARCH.COM

Reid Middleton
728 134th Street SW, Suite 200
Everett, Washington 98204
Ph: 425.741.3800
www.reidmiddleton.com

© Copyright 2024 Reid Middleton, Inc.

KATHERINE B. KRAFT
STATE OF WASHINGTON
49567
STRUCTURAL ENGINEER
PROFESSIONAL ENGINEER
10/28/24

HQ INTERIOR OFFICE REMODEL & ROOF REPAIRS
GIG HARBOR FIRE AND MEDIC ONE
10222 BUJACICH ROAD NW
GIG HARBOR, WA 98332

PROJECT # 262024.076

BID SET

ISSUE DATE OCTOBER 22, 2024

REVISION SCHEDULE

1	ADDENDUM 01	11/1/2024

AHJ APPROVAL STAMP

GENERAL STRUCTURAL NOTES

SHEET #

Si00.02

DESIGN SHOWN ON THE DRAWINGS IS BASED ON LUMBER MANUFACTURED BY WEYERHAEUSER IN ACCORDANCE WITH ICC-ES REPORT NO. ESR-1387 REDBUILT LLC IN ACCORDANCE WITH ICC-ESR-2993 / BOISE CASCADE IN ACCORDANCE WITH ICC-ESR-1040. ALTERNATE ENGINEERED LUMBER MAY BE USED SUBJECT TO REVIEW AND APPROVAL BY THE ARCHITECT AND STRUCTURAL ENGINEER. A CURRENT NER OR ICC-ES REPORT AND A LIST STATING THE ITEM-FOR-ITEM SUBSTITUTION MUST BE SUBMITTED TO THE STRUCTURAL ENGINEER FOR ANY PROPOSED SUBSTITUTES.

ENGINEERED WOOD I-JOISTS SHALL BE FURNISHED AND INSTALLED IN CONFORMANCE WITH THE MANUFACTURER'S INSTRUCTIONS. ALL NECESSARY BRIDGING, BLOCKING, BLOCKING PANELS, STIFFENERS, ETC., SHALL BE DETAILED AND FURNISHED BY THE MANUFACTURER. PERMANENT AND TEMPORARY BRIDGING SHALL BE INSTALLED IN CONFORMANCE WITH MANUFACTURER'S INSTRUCTIONS. ALL JOIST HANGERS AND OTHER HARDWARE SHALL BE COMPATIBLE IN SIZE WITH ENGINEERED WOOD I-JOISTS PROVIDED.

DESIGN SHOWN ON THE DRAWINGS IS BASED ON JOISTS MANUFACTURED BY REDBUILT LLC IN ACCORDANCE WITH ICC-ES REPORT NO. ESR-2994. WEYERHAEUSER IN ACCORDANCE WITH ICC-ES REPORT NO. ESR-1387. DESIGN SHOWN ON THE DRAWINGS IS ALSO BASED ON JOISTS MANUFACTURED WITH TOP AND BOTTOM FLANGES HAVING A SPECIFIC GRAVITY OF 0.50. ALTERNATE ENGINEERED WOOD I-JOISTS MAY BE USED SUBJECT TO REVIEW AND APPROVAL BY THE STRUCTURAL ENGINEER. A CURRENT NER OR ICC-ES REPORT AND A LIST STATING THE ITEM-FOR-ITEM SUBSTITUTION MUST BE SUBMITTED TO THE STRUCTURAL ENGINEER FOR ANY PROPOSED SUBSTITUTES. THE CONTRACTOR SHALL BE RESPONSIBLE FOR ALL ENGINEERING COSTS RELATING TO REVIEW AND/OR RE-DESIGN TO ACCOMMODATE PROPOSED SUBSTITUTIONS.

THE JOIST MANUFACTURER SHALL COORDINATE LOCATIONS AND SUPPORT CONFIGURATIONS OF PLUMBING, MECHANICAL UNITS, DUCTS, AND/OR OTHER MISCELLANEOUS ITEMS WITH THE CONTRACTOR PRIOR TO JOIST FABRICATION. THE JOIST MANUFACTURER SHALL DESIGN JOISTS TO SUPPORT ALL LOADS ASSOCIATED WITH SUCH ITEMS. THE JOIST SHOP DRAWINGS SHALL INCLUDE ALL DESIGN LOADS AND APPROVED HANGER CONNECTION DETAILS TO JOISTS FOR SUPPORT OF HUNG MECHANICAL SYSTEM COMPONENTS

SUBMIT SHOP DRAWINGS AND DESIGN CALCULATIONS TO THE STRUCTURAL ENGINEER FOR REVIEW PRIOR TO FABRICATION. DESIGN SUBMITTALS SHALL BEAR THE STAMP AND SIGNATURE OF A REGISTERED PROFESSIONAL ENGINEER, STATE OF WASHINGTON.

ROOF I-JOIST HANGERS SHALL BE 'MIU' SERIES BY SIMPSON STRONG-TIE, UNLESS OTHERWISE NOTED.

FLOOR I-JOIST HANGERS SHALL BE 'MIT' SERIES BY SIMPSON STRONG-TIE, UNLESS OTHERWISE NOTED.

TIMBER CONNECTORS CALLED OUT BY LETTERS AND NUMBERS SHALL BE "STRONG-TIE" BY SIMPSON COMPANY, AS SPECIFIED IN THEIR LATEST CATALOG. ALTERNATE CONNECTORS CONFORMING WITH IBC SECTION 2303.5 & 2304.10.3., THAT MEET OR EXCEED THE SPECIFIED CONNECTORS' CAPACITY MAY BE USED SUBJECT TO REVIEW AND APPROVAL BY THE ENGINEER. A CURRENT ICC-ES REPORT AND A LIST STATING THE ITEM-FOR-ITEM SUBSTITUTION AND CAPACITY COMPARISONS MUST BE SUBMITTED TO THE STRUCTURAL ENGINEER FOR ANY PROPOSED SUBSTITUTES. THE CONTRACTOR SHALL BE RESPONSIBLE FOR ALL ENGINEERING COSTS RELATING TO REVIEW AND/OR RE-DESIGN TO ACCOMMODATE PROPOSED SUBSTITUTIONS. INSTALL NUMBER AND SIZE OF FASTENERS AS SPECIFIED BY MANUFACTURER. CONNECTORS SHALL BE INSTALLED IN ACCORDANCE WITH THE MANUFACTURER'S INSTRUCTIONS. WHERE CONNECTOR STRAPS CONNECT TWO MEMBERS, CENTER STRAP ON JOINT AND INSTALL NUMBER AND SIZE OF FASTENERS AS SPECIFIED BY MANUFACTURER, WITH EQUAL NUMBER AND SIZE OF FASTENERS IN EACH MEMBER. ALL BOLTS IN WOOD MEMBERS SHALL CONFORM TO ASTM A307. INSTALL WASHERS UNDER THE HEADS AND NUTS OF ALL BOLTS AND LAG SCREWS BEARING ON WOOD. ALL SHIMS SHALL BE SEASONED AND DRIED AND THE SAME GRADE (MINIMUM) AS MEMBERS CONNECTED. ALL TIMBER JOISTS AND MULTIPLE JOIST BEAMS SHALL BE CONNECTED TO FLUSH BEAMS WITH "HU" SERIES JOIST HANGERS, UNLESS OTHERWISE NOTED.

ALL TIMBER CONNECTORS IN CONTACT WITH PRESSURE-TREATED WOOD THAT USES PRESERVATIVE CHEMICALS SHALL BE MANUFACTURED FROM ZMAX STEEL BY SIMPSON (G185 STEEL PER ASTM A653), OR TYPE 304 OR 316 STAINLESS STEEL. ALTERNATIVELY, CONNECTORS CAN BE POST HOT DIP GALVANIZED PER ASTM A123 OR MECHANICALLY GALVANIZED PER ASTM B695, CLASS 55 OR GREATER. STAINLESS STEEL FASTENERS SHALL BE USED WITH STAINLESS STEEL CONNECTORS, AND HOT DIP GALVANIZED FASTENERS PER ASTM A153 SHALL BE USED WITH GALVANIZED CONNECTORS.

NAILING NOT SPECIFICALLY NOTED IN DRAWINGS SHALL BE AS SHOWN IN IBC TABLE 2304.10.2. NAILS SHALL COMPLY WITH ASTM F1667. MINIMUM NAIL DIMENSIONS SHALL BE AS FOLLOWS:

SIZE	DIAMETER	LENGTH
6d	0.113"	2"
8d	0.131"	2 1/2"
10d	0.148"	3"
12d	0.148"	3 1/4"
16d	0.162"	3 1/2"
20d	0.192"	4"

BOLTS SHALL CONFORM TO ASTM A307. LAG SCREWS SHALL CONFORM TO ASME B18.2.1. INSTALL WASHERS UNDER THE HEADS AND NUTS OF ALL BOLTS AND LAG SCREWS BEARING ON WOOD. INSTALLATION OF LAG SCREWS SHALL CONFORM TO 2018 NDS SECTION 12.1.4, AND INSTALLATION OF BOLTS SHALL CONFORM TO 2018 NDS SECTION 12.1.3. PRE-DRILL HOLES FOR LAG SCREWS TO AVOID SPLITTING.

ALL TIMBER FASTENERS IN CONTACT WITH PRESERVATIVE-TREATED OR FIRE-TREATED WOOD SHALL BE POST HOT DIP GALVANIZED PER ASTM A153.

SPECIAL INSPECTION SCHEDULES

SEE EARTHQUAKE DESIGN DATA SECTION OF THE GENERAL STRUCTURAL NOTES FOR SEISMIC-FORCE RESISTING-SYSTEMS. SEISMIC-FORCE-RESISTING SYSTEMS (INCLUDING DRAG STRUTS AND CHORDS) ARE SUBJECT TO SPECIAL INSPECTION IN ACCORDANCE WITH THE FOLLOWING SEISMIC AND NON-SEISMIC TABLES. STRUCTURAL SYSTEMS NOT PART OF THE SEISMIC-FORCE-RESISTING SYSTEM NEED ONLY BE INSPECTED IN ACCORDANCE WITH NON-SEISMIC TABLES. SEE THE 2021 IBC CHAPTER 17 FOR ADDITIONAL REQUIREMENTS.

STRUCTURAL STEEL SPECIAL INSPECTION

SPECIAL INSPECTION FOR STRUCTURAL STEEL SHALL BE ACCORDANCE WITH AISC 341, AISC 360, AND THE FOLLOWING INFORMATION.

TASK - INDICATES WHETHER TO OBSERVE OR PERFORM (OR BOTH) THE INSPECTION TASK.
DOC - THE INSPECTOR SHALL PREPARE REPORTS INDICATING THAT THE WORK HAS BEEN PERFORMED IN ACCORDANCE WITH THE CONTRACT DOCUMENTS.
O - OBSERVE THESE FUNCTIONS ON A RANDOM, DAILY BASIS, OPERATIONS NEED NOT BE DELAYED PENDING INSPECTIONS. FREQUENCY OF OBSERVATIONS SHALL BE ADEQUATE TO CONFIRM THAT THE WORK HAS BEEN PERFORMED INACCORDANCE WITH THE APPLICABLE DOCUMENTS.
P - PERFORM, FOR EACH JOINT OR MEMBER PRIOR TO THE FINAL ACCEPTANCE OF THE ITEM.
QC - TASKS INDICATED AS "QC" SHALL BE EXECUTED BY THE FABRICATOR AND ERECTOR IN ACCORDANCE WITH AISC 360 CHAPTER N.
QA - TASKS INDICATED AS "QA" SHALL BE EXECUTED BY THE SPECIAL INSPECTOR IN ACCORDANCE WITH AISC 360 CHAPTER N.

WELDING

INSPECTION TASKS PRIOR TO WELDING			REFERENCED STANDARD	IBC REFERENCE
INSPECTION TASKS PRIOR TO WELDING	QC	QA	AISC 360 CH. N AND AWS D1.1	1705.2.1
WELDING PROCEDURE SPECIFICATIONS (WPSS) AVAILABLE	P	P		
MANUFACTURER CERTIFICATIONS FOR WELDING CONSUMABLES AVAILABLE	P	P		
MATERIAL IDENTIFICATION (TYPE / GRADE)	O	O		
WELDER IDENTIFICATION SYSTEM [1]	O	O		
FIT-UP OF GROOVE WELDS (INCLUDING JOINT GEOMETRY), JOINT PREPARATION, DIMENSIONS (ALIGNMENT, ROOT OPENING, ROOT FACE, BEVEL), CLEANLINESS (CONDITION OF STEEL SURFACES), TACKING (TACK WELD QUALITY AND LOCATION), BACKING TYPE AND FIT (IF APPLICABLE)	O	O		
CONFIGURATION AND FINISH OF ACCESS HOLES	O	O		
FIT-UP OF FILLET WELDS, DIMENSIONS (ALIGNMENT, GAPS AT ROOT), CLEANLINESS (CONDITION OF STEEL SURFACES), TACKING (TACK WELD QUALITY AND LOCATION)	O	O		
CHECK WELDING EQUIPMENT	O	-		

INSPECTION TASKS DURING WELDING			REFERENCED STANDARD	IBC REFERENCE
INSPECTION TASKS DURING WELDING	QC	QA	AISC 360 CH. N AND AWS D1.1	1705.2.1
USE OF QUALIFIED WELDERS	O	O		
CONTROL AND HANDLING OF WELDING CONSUMABLES, PACKAGING, EXPOSURE CONTROL	O	O		
NO WELDING OVER CRACKED TACK WELDS	O	O		
ENVIRONMENTAL CONDITIONS, WIND SPEED WITHIN LIMITS, PRECIPITATION AND TEMPERATURE	O	O		
WPS FOLLOWED, SETTINGS ON WELDING EQUIPMENT, TRAVEL SPEED, SELECTED WELDING MATERIALS, SHIELDING GAS TYPE / FLOW RATE, PREHEAT APPLIED, INTERPASS TEMPERATURE MAINTAINED (MINIMUM / MAXIMUM), PROPER POSITION (F, V, H, OH)	O	O		
WELDING TECHNIQUES, INTERPASS AND FINAL CLEANING, EACH PASS WITHIN PROFILE LIMITATIONS, EACH PASS MEETS QUALITY REQUIREMENTS	O	O		

INSPECTION TASKS AFTER WELDING			REFERENCED STANDARD	IBC REFERENCE
INSPECTION TASKS AFTER WELDING	QC	QA	AISC 360 CH. N AND AWS D1.1	1705.2.1
WELDS CLEANED	O	O		
SIZE, LENGTH AND LOCATION OF WELDS	P	P		
WELDS MEET VISUAL ACCEPTANCE CRITERIA, CRACK PROHIBITION, WELD / BASE-METAL FUSION, CRATER CROSS SECTION, WELD PROFILES, WELD SIZE, UNDERCUT, POROSITY	P	P		
ARC STRIKES	P	P		
k-AREA [2]	P	P		
BACKING REMOVED AND WELD TABS REMOVED (IF REQUIRED)	P	P		
REPAIR ACTIVITIES	P	P		
DOCUMENT ACCEPTANCE OR REJECTION OF WELDED JOINT OR MEMBER	P	P		

[1] THE FABRICATOR OR ERECTOR, AS APPLICABLE, SHALL MAINTAIN A SYSTEM BY WHICH A WELDER WHO HAS WELDED A JOINT OR MEMBER CAN BE IDENTIFIED. STAMPS, IF USED, SHALL BE THE LOW-STRESS TYPE.

[2] WHEN WELDING OF DOUBLER PLATES, CONTINUITY PLATES OR STIFFENERS HAS BEEN PERFORMED IN THE k-AREA, VISUALLY INSPECT THE WEB k-AREA FOR CRACKS WITHIN 3 INCHES OF WELD.

SPECIAL INSPECTION OF CONCRETE CONSTRUCTION

VERIFICATION AND INSPECTION	CONTINUOUS	PERIODIC	REFERENCED STANDARD [1]	IBC REFERENCE
4. INSPECT ANCHORS POST-INSTALLED IN HARDENED CONCRETE MEMBERS [2]				
a. ADHESIVE ANCHORS INSTALLED IN HORIZONTALLY OR UPWARDLY INCLINED ORIENTATIONS TO RESIST SUSTAINED TENSION LOADS	X	-	ACI 318: 26.7.1-26.7.2	-
b. MECHANICAL ANCHORS AND ADHESIVE ANCHORS NOT DEFINED IN 4a	-	X	ACI 318: 26.7	-
c. EXPANSION (TORQUE AND DISPLACEMENT CONTROLLED) SCREW, AND UNDERCUT ANCHORS	X	-	ACI 318: 26.7.1-26.7.2	-

[1] WHERE APPLICABLE, SEE ALSO IBC SECTION 1705.12, SPECIAL INSPECTIONS FOR SEISMIC RESISTANCE. SPECIFIC REQUIREMENTS FOR SPECIAL INSPECTION SHALL BE INCLUDED IN THE RESEARCH REPORT FOR THE ANCHOR ISSUED BY AN APPROVED SOURCE IN ACCORDANCE WITH 17.8.2 IN ACI 318, OR OTHER QUALIFICATION PROCEDURES. WHERE SPECIFIC REQUIREMENTS ARE NOT PROVIDED

[2] SPECIAL INSPECTION REQUIREMENTS SHALL BE SPECIFIED BY THE REGISTERED DESIGN PROFESSIONAL AND SHALL BE APPROVED BY THE BUILDING OFFICIAL PRIOR TO THE COMMENCEMENT OF WORK.

NON-STRUCTURAL COMPONENTS SEISMIC REQUIREMENTS FOR NONSTRUCTURAL COMPONENTS

VERIFICATION AND INSPECTION TASK	CONTINUOUS	PERIODIC	REFERENCED STANDARD	IBC REFERENCE
1. DESIGNATED SEISMIC SYSTEM				
a. VERIFY THE LABEL, ANCHORAGE AND MOUNTING CONFORMS TO THE CERTIFICATE OF COMPLIANCE		X	ASCE 7 SECTION 13.2	1705.12.4
2. ARCHITECTURAL COMPONENTS				
a. ERECTION AND FASTENING OF b. EXTERIOR CLADDING [1, 2]		X	-	1705.12.5
b. ERECTION AND FASTENING OF INTERIOR AND EXTERIOR NON-BEARING WALLS [1, 2]		X	-	1705.12.5
c. ERECTION AND FASTENING OF INTERIOR AND EXTERIOR VENEER [1, 2]		X	-	1705.12.5
d. ANCHORAGE OF ACCESS FLOORS		X	-	1705.12.5.1
3. PLUMBING, MECHANICAL AND ELECTRICAL COMPONENTS				
a. ANCHORAGE OF ELECTRICAL EQUIPMENT FOR EMERGENCY AND STANDBY POWER SYSTEMS		X	-	1705.12.6
b. ANCHORAGE OF OTHER ELECTRICAL EQUIPMENT		X	-	1705.12.6
c. INSTALLATION AND ANCHORAGE OF PIPING SYSTEM DESIGNED TO CARRY HAZARDOUS MATERIALS AND THERE ASSOCIATED MECHANICAL UNITS		X	-	1705.12.6
d. INSTALLATION AND ANCHORAGE OF DUCTWORK DESIGNED TO CARRY HAZARDOUS MATERIALS		X	-	1705.12.6
e. INSTALLATION AND ANCHORAGE OF VIBRATION ISOLATION SYSTEM WHERE THE NOMINAL CLEARANCE BETWEEN THE EQUIPMENT SUPPORT FRAME AND RESTRAIN IS 1/4 INCH OR LESS		X	-	1705.12.6
4. STORAGE RACK				
a. ANCHORAGE OF STORAGE RACKS 8 FEET OR GREATER IN HEIGHT		X	-	1705.12.7

[1] SPECIAL INSPECTION IS NOT REQUIRED FOR EXTERIOR CLADDING, INTERIOR AND EXTERIOR NONBEARING WALLS AND INTERIOR AND EXTERIOR VENEER 30 FEET OR LESS IN HEIGHT ABOVE GRADE [OR A WALKING SURFACE].

[2] SPECIAL INSPECTION IS NOT REQUIRED FOR EXTERIOR CLADDING AND INTERIOR AND EXTERIOR VENEER WEIGHING 5 PSF OR LESS. SPECIAL INSPECTION IS NOT REQUIRED FOR INTERIOR NON-BEARING WALLS WEIGHING 15 PSF OR LESS.

RICE fergus MILLER
ARCHITECTURE INTERIORS PLANNING VIZLAB
275 FIFTH STREET, SUITE 100
BREMERTON, WA 98337
360-377-8773
RFMARCH.COM

Reid Middleton
728 134th Street SW, Suite 200
Everett, Washington 98204
Ph: 425.741.3800
www.reidmiddleton.com

© Copyright 2024 Reid Middleton, Inc.

KATHERINE B. KRAUT
STATE OF WASHINGTON
19567
STRUCTURAL ENGINEER
PROFESSIONAL ENGINEER
10/28/24

HQ INTERIOR OFFICE REMODEL & ROOF REPAIRS
GIG HARBOR FIRE AND MEDIC ONE
10222 BUJACICH ROAD NW
GIG HARBOR, WA 98332

PROJECT # 262024.076
BID SET
ISSUE DATE OCTOBER 22, 2024

REVISION SCHEDULE		
1	ADDENDUM 01	11/1/2024

AHJ APPROVAL STAMP

GENERAL STRUCTURAL NOTES & SPECIAL INSPECTION SCHEDULES

SHEET #
Si00.03

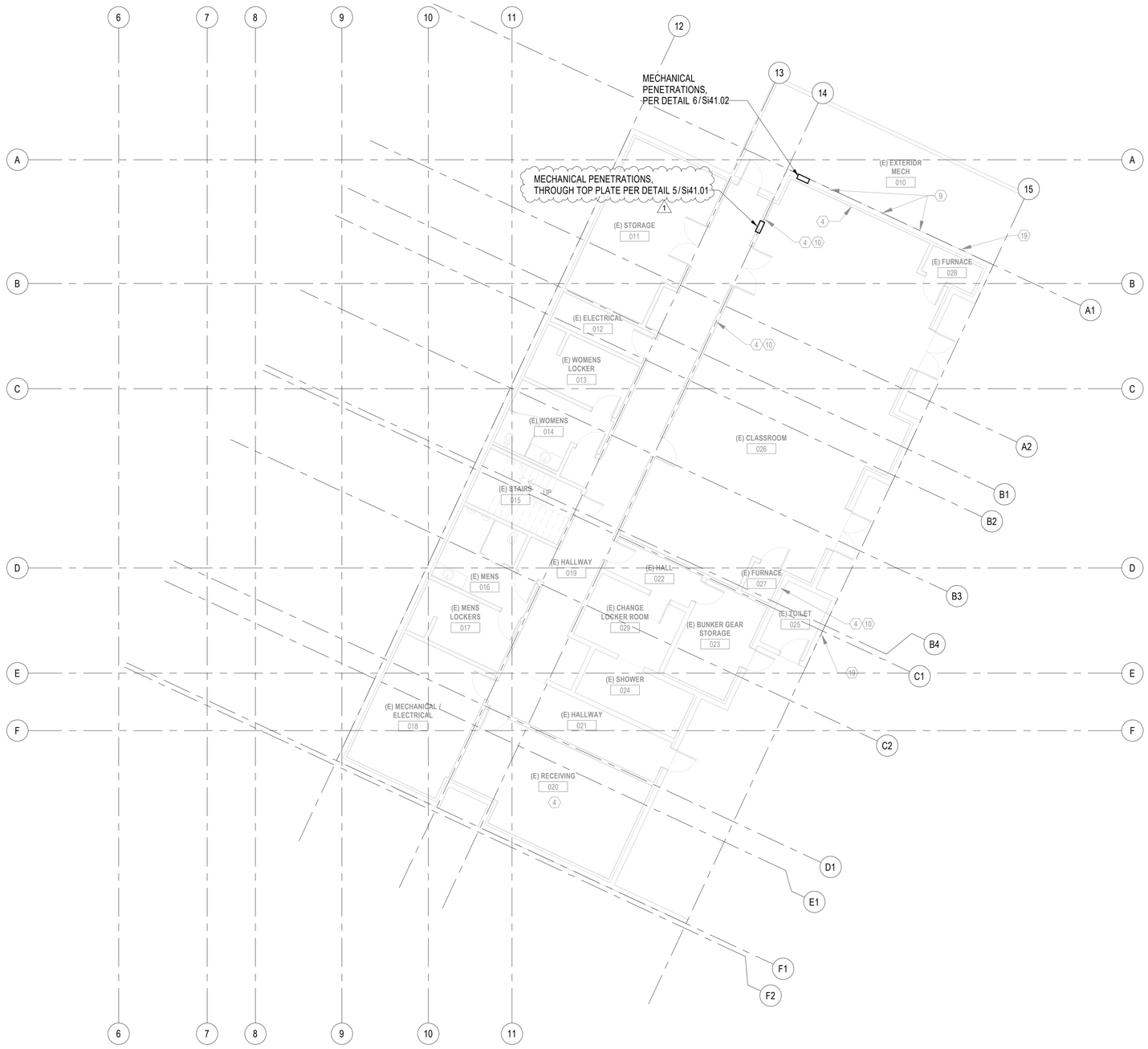

PLAN NOTES:

1. SEE Si00.01 THROUGH Si00.04 FOR GENERAL STRUCTURAL NOTES, SPECIAL INSPECTIONS, ABBREVIATIONS, AND SYMBOLS.

1 LOWERL LEVEL FOUNDATION PLAN

1/8" = 1'-0"

RICE fergus MILLER
ARCHITECTURE INTERIORS PLANNING VIZLAB
275 FIFTH STREET, SUITE 100
BREMERTON, WA 98337
360-377-8773
RFMARCH.COM

Reid Middleton
728 134th Street SW, Suite 200
Everett, Washington 98204
Ph: 425.741.3800
www.reidmiddleton.com
© Copyright 2024 Reid Middleton, Inc.

KATHERINE B. KRALT
STATE OF WASHINGTON
19567
STRUCTURAL ENGINEER
PROFESSIONAL ENGINEER
10/28/24

HQ INTERIOR OFFICE REMODEL & ROOF REPAIRS

GIG HARBOR FIRE AND MEDIC ONE

10222 BUJACICH ROAD NW
GIG HARBOR, WA 98332

PROJECT # 262024.076

BID SET

ISSUE DATE OCTOBER 22, 2024

REVISION SCHEDULE

1	ADDENDUM 01	11/1/2024

AHJ APPROVAL STAMP

LOWER LEVEL FOUNDATION PLAN

SHEET #

Si22.00

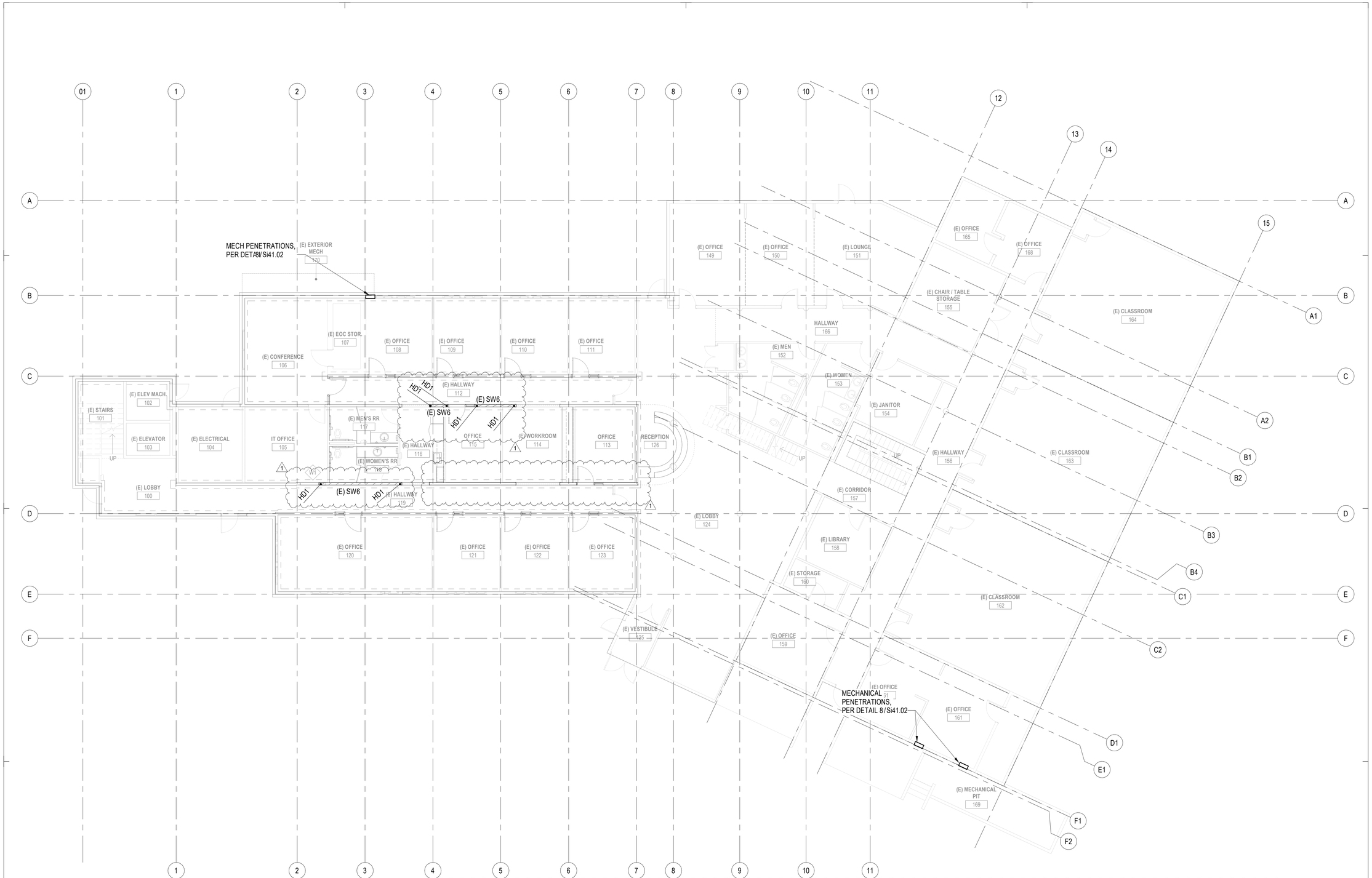

PLAN NOTES:

1. PLYWOOD-SHEATHED WALLS NOTED ON PLANS, SHALL BE FULL HEIGHT, THE SHEATHING SHALL EXTEND FROM THE FOUNDATION TO THE FLOOR DIAPHRAGM.
2. SEE Si00.01 THROUGH Si00.04 FOR GENERAL STRUCTURAL NOTES, SPECIAL INSPECTIONS, ABBREVIATIONS, AND SYMBOLS.
3. DESIGNATES EXISTING CONCRETE STRIP FOOTING AND THICKENED SLAB PER RECORD DRAWINGS.
4. EXISTING SHEAR WALLS ARE IDENTIFIED PER RECORD DRAWINGS. FIELD VERIFY PER 12/Si41.02.
5. AT EXISTING PLYWOOD WALL, REMOVE STRIP TO VERIFY EXISTING NAILING, SILL PLATE ANCHOR TYPE SPACING, BLOCKING, TOP CONNECTION PER 12/Si41.02 PROVIDE SUPPLEMENTAL ANCHORS, HOLDOWNS, AND NAILING, AS REQUIRED TO MEET 12/Si41.01 SHEAR WALL REQUIREMENTS AND HOLDOWN. SUBMIT TO OWNER FOR REVIEW PRIOR TO COMPETE DEMO.
6. AT NEW HOLDOWN (HD) LOCATIONS, VERIFY IF EXISTING HOLDOWN EXISTS AND CONFIRM WITH OWNER PRIOR TO INSTALLATION OF HOLDOWN. IT IS ACCEPTALBE TO SHIFT HOLDOWN TO ADJACENT STUD PROVIDED THAT THE REQUIREMENTS OF 12/Si41.01 ARE MET.

1 MAIN LEVEL FOUNDATION PLAN

1/8" = 1'-0"

RICE fergus MILLER
ARCHITECTURE INTERIORS PLANNING VIZLAB
275 FIFTH STREET, SUITE 100
BREMERTON, WA 98337
360-377-8773
RFMARCH.COM

Reid Middleton
728 134th Street SW, Suite 200
Everett, Washington 98204
Ph: 425.741.3800
www.reidmiddleton.com
© Copyright 2024 Reid Middleton, Inc.

KATHERINE R. KRALLY
STATE OF WASHINGTON
19667
STRUCTURAL ENGINEER
PROFESSIONAL ENGINEER
10/28/24

HQ INTERIOR OFFICE REMODEL & ROOF REPAIRS
GIG HARBOR FIRE AND MEDIC ONE
10222 BUJACICH ROAD NW
GIG HARBOR, WA 98332

PROJECT # 262024.076

BID SET

ISSUE DATE OCTOBER 22, 2024

REVISION SCHEDULE

1	ADDENDUM 01	11/1/2024

AHJ APPROVAL STAMP

MAIN LEVEL FOUNDATION PLAN

SHEET #
Si22.01

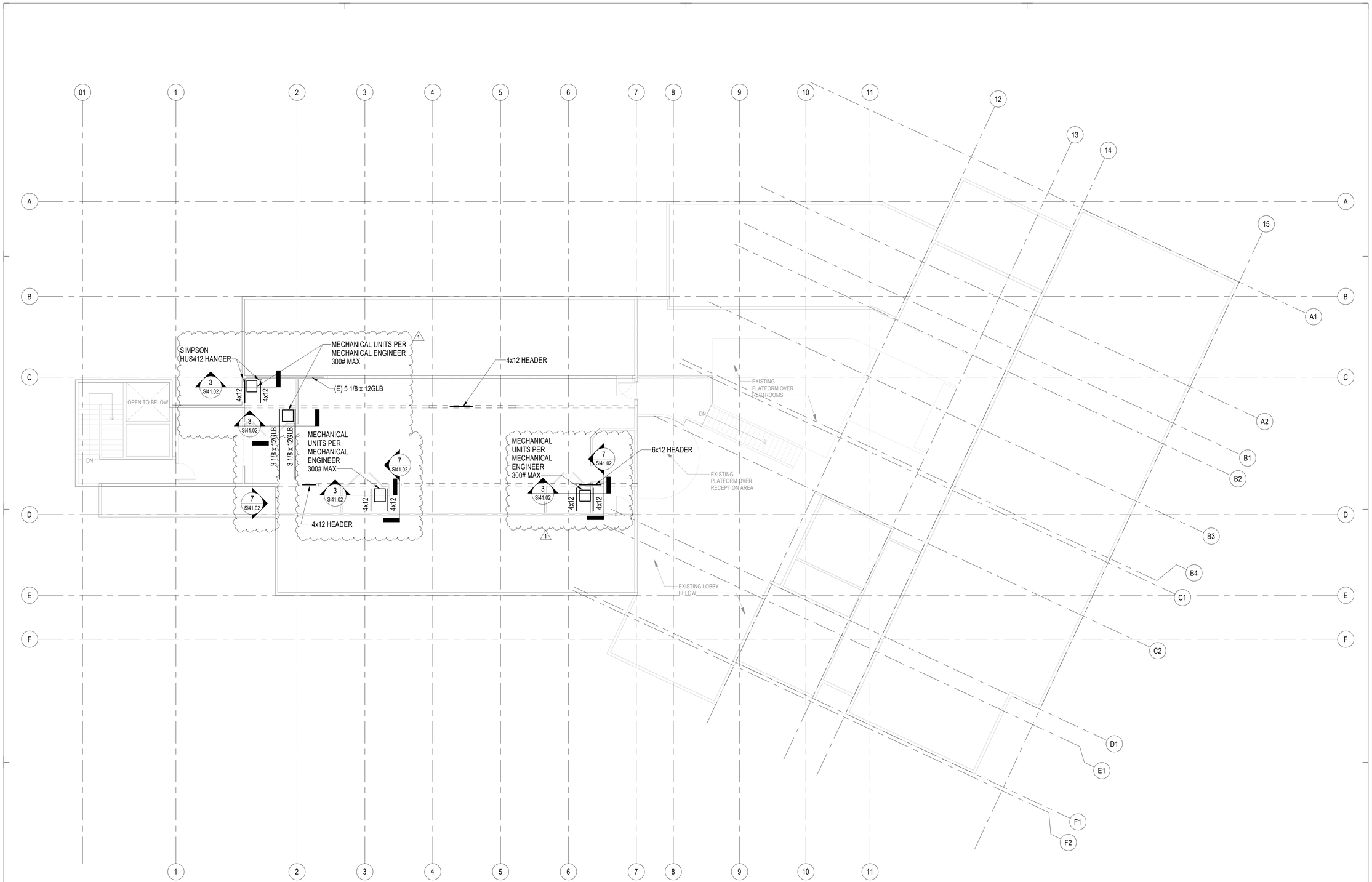

UPPER LEVEL FRAMING PLAN

1. SEE Si41.01 FOR TYPICAL FRAMING DETAILS.
2. SEE 7/Si41.02 FOR NEW SUPPORT BEAM TO WALL ATTACHMENT.

1 02 - UPPER LEVEL FRAMING PLAN

1/8" = 1'-0"

RICE fergus MILLER
ARCHITECTURE INTERIORS PLANNING VIZLAB
275 FIFTH STREET, SUITE 100
BREMERTON, WA 98337
360-377-8773
RFMARCH.COM

Reid Middleton
728 134th Street SW, Suite 200
Everett, Washington 98204
Ph: 425.741.3800
www.reidmiddleton.com
© Copyright 2024 Reid Middleton, Inc.

KATHERINE B. KRALT
STATE OF WASHINGTON
19567
STRUCTURAL ENGINEER
PROFESSIONAL ENGINEER
10/28/24

HQ INTERIOR OFFICE REMODEL & ROOF REPAIRS

GIG HARBOR FIRE AND MEDIC ONE

10222 BUJACICH ROAD NW
GIG HARBOR, WA 98332

PROJECT # 262024.076

BID SET

ISSUE DATE OCTOBER 22, 2024

REVISION SCHEDULE

1	ADDENDUM 01	11/1/2024

AHJ APPROVAL STAMP

UPPER LEVEL
FRAMING PLAN

SHEET #
Si22.02

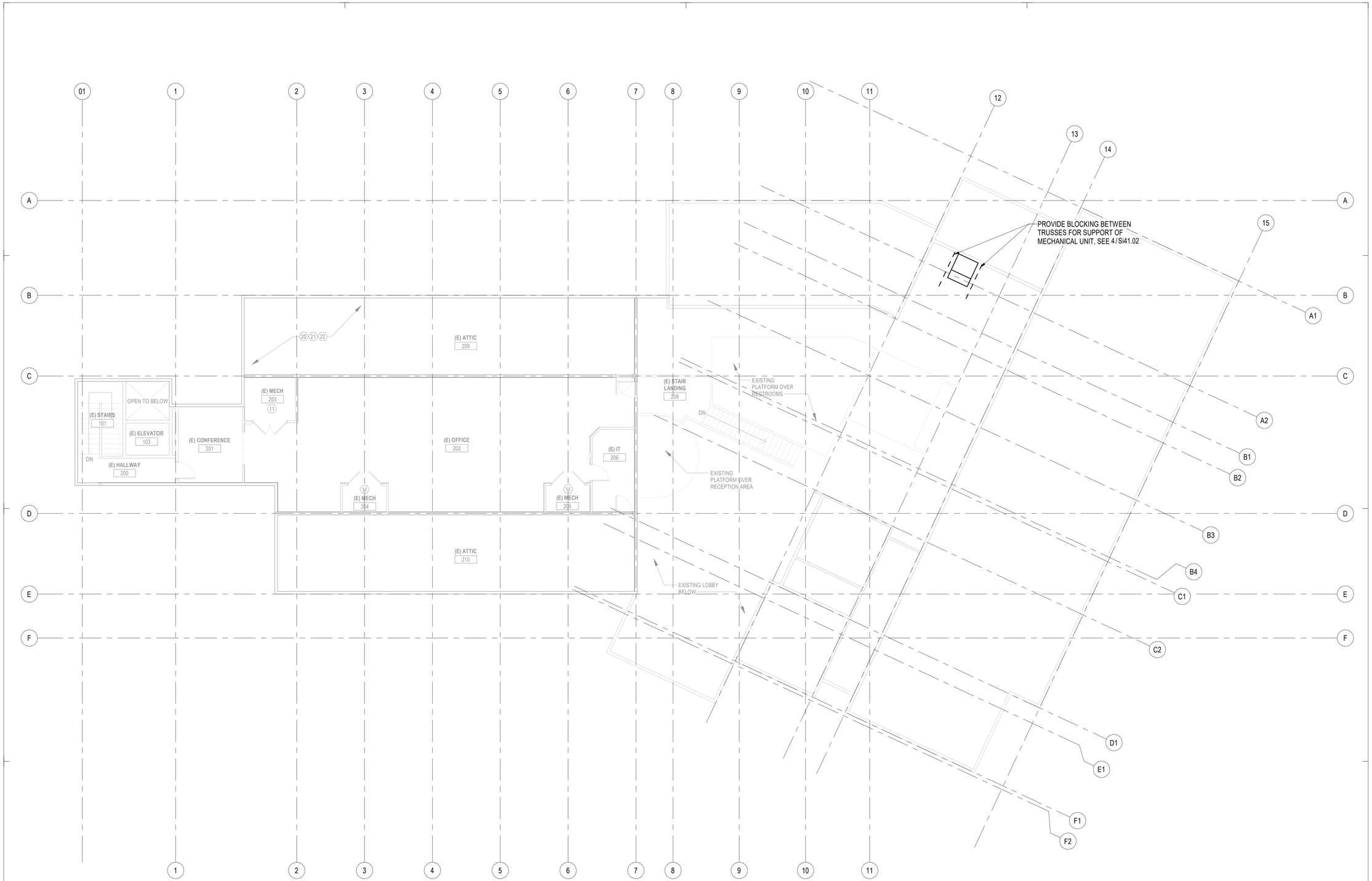

ROOF FRAMING PLAN

1. SEE Si41.01 FOR TYPICAL FRAMING DETAILS.
2. SEE 7/Si41.02 FOR NEW TRUSS BLOCKING DETAIL AT MECHANICAL UNIT SUPPORT.

1

1 ROOF FRAMING PLAN
1/8" = 1'-0"

RICE fergus MILLER
ARCHITECTURE INTERIORS PLANNING VIZLAB
275 FIFTH STREET, SUITE 100
BREMERTON, WA 98337
360-377-8773
RFMARCH.COM

Reid Middleton
728 134th Street SW, Suite 200
Everett, Washington 98204
Ph: 425.741.3800
www.reidmiddleton.com
© Copyright 2024 Reid Middleton, Inc.

KATHERINE R. KRALT
STATE OF WASHINGTON
19567
STRUCTURAL ENGINEER
PROFESSIONAL ENGINEER
10/28/24

HQ INTERIOR OFFICE REMODEL & ROOF REPAIRS

GIG HARBOR FIRE AND MEDIC ONE

10222 BUJACICH ROAD NW
GIG HARBOR, WA 98332

PROJECT #	262024.076
BID SET	
ISSUE DATE	OCTOBER 22, 2024

REVISION SCHEDULE

1	ADDENDUM 01	11/1/2024

AHJ APPROVAL STAMP

ROOF FRAMING PLAN

SHEET #
Si22.03

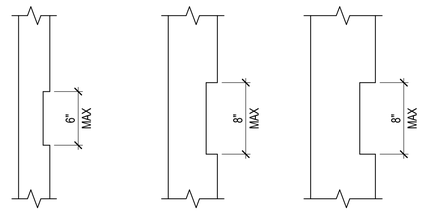

2x4 STUDS (3x4 SIMILAR) | 2x6 STUDS (3x6 SIMILAR) | 2x8 STUDS (3x8 SIMILAR)

NOTE:

1. NOTCHES SHALL NOT OCCUR IN MORE THAN (2) SUCCESSIVE STUDS.

1 ALLOWABLE NOTCHES IN STUDS
1 1/2" = 1'-0"

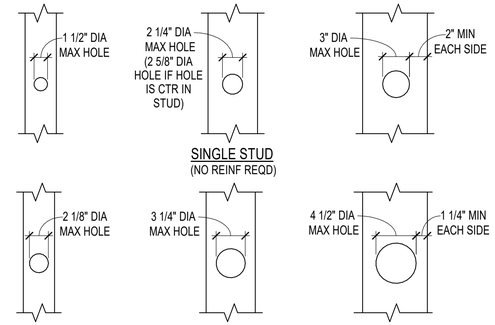

NOTE:

1. MULTIPLE HOLES IN STUDS SHALL BE SPACED TO PROVIDE (3) DIAMETERS CLEARANCE MINIMUM BETWEEN HOLES BASED ON LARGER HOLE SIZE.

2 HOLES ALLOWED THRU STUDS
1 1/2" = 1'-0"

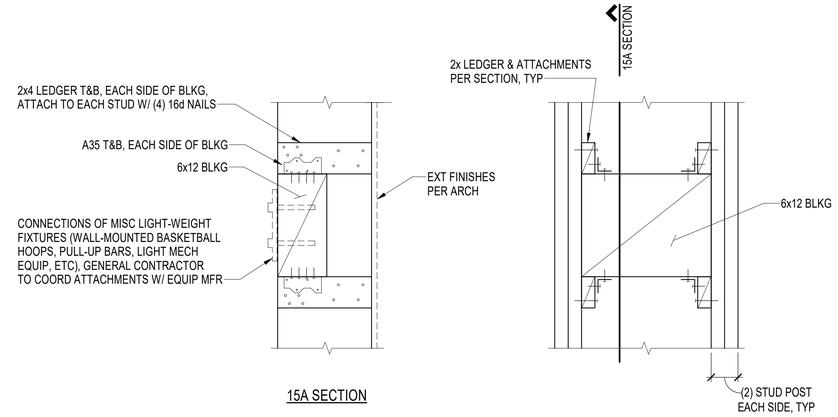

4 EQUIPMENT ATTACHMENT TO STUD WALL
1 1/2" = 1'-0"

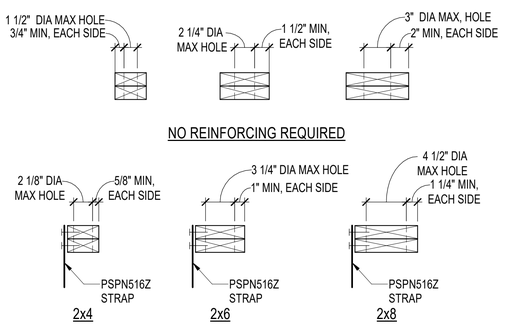

NOTE:

1. AT BOTTOM PLATES, FOLLOW GUIDELINES SHOWN, EXCEPT USE CS16 x 2'-0" STRAP.

5 ALLOWABLE HOLES THRU TOP PLATES
1 1/2" = 1'-0"

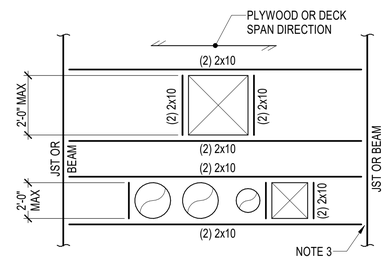

NOTES:

1. ATTACH PLYWOOD OR DECK TO FRAMING WITH DIAPHRAGM BOUNDARY NAILING .
2. LARGER OPENINGS MUST BE COORDINATED WITH ARCHITECT AND ENGINEER.
3. CONTRACTOR AND JOIST MANUFACTURER TO COORDINATE OPENINGS. JOIST MANUFACTURER TO PROVIDE WEB FILLER AND / OR TRANSFER BLOCKS.

6 REINFORCING AT MISCELLANEOUS ROOF OPENINGS IN THE WOOD FRAMING
NTS

SHEAR WALL SCHEDULE

WALL MARK	WALL SHEATHING	PANEL EDGE NAILING	FRAMING AT ADJ PANEL EDGES	(2) 2x FRAMING NAILING	BOTTOM PLATE NAILING	ALTERNATE BOTTOM PLATE CONNECTION TO FRAMING BELOW	TOP PLATE CONNECTION	FDN STILL PLATE	ANCHOR BOLTING OF SILL PLATE TO CONCRETE	ALLOWABLE SHEAR (PLF)
							A35 OR LTP4			
	NOTES #1, #10	NOTES #2, #8	NOTES #4, #5	NOTES #5, #8	NOTES #3, #8, #9	NOTES #3, #9	NOTES #7, #8	NOTE #9	NOTE #6	NOTE #8
SW6	15/32" (1) SIDE	0.148 x 2 1/2 @ 6" OC	2x	-	0.148 x 3 1/4 @ 6" OC	1/4" x 5" SDS SCREWS @ 18" OC	@ 2'-3" OC	2x	5/8" DIA @ 48" OC or 3/4" DIA @ 48" OC	310
SW4	15/32" (1) SIDE	0.148 x 2 1/2 @ 4" OC	2x	-	0.148 x 3 1/4 @ 4 1/2" OC	1/4" x 5" SDS SCREWS @ 14" OC	@ 1'-8" OC	2x	5/8" DIA @ 30" OC or 3/4" DIA @ 40" OC	460
SW3	15/32" (1) SIDE	0.148 x 2 1/2 @ 3" OC	3x ((2) 2x)	0.148 x 3 1/4 @ 3 1/2" OC	0.148 x 3 1/4 @ 3 1/2" OC	1/4" x 5" SDS SCREWS @ 10" OC	@ 1'-2" OC	2x	5/8" DIA @ 24" OC or 3/4" DIA @ 32" OC	600

SHEAR WALL NOTES:

1. WALL SHEATHING SHALL BE APA RATED ORIENTED STRAND BOARD (OSB) OR CDX PLYWOOD, EXPOSURE 1, AND HAVE A PANEL SPAN RATING OF 24/16. WALL PANELS MAY BE INSTALLED VERTICALLY OR HORIZONTALLY. PANELS SHALL NOT BE LESS THAN 4 FT x 8 FT, EXCEPT AT BOUNARIES AND CHANGES IN FRAMING. ALL EDGES OF ALL PANELS SHALL BE SUPPORTED BY AND FRAMING MEMBERS OR BLOCKING.
2. THE SPECIFIED PANEL EDGE NAILING IS REQUIRED AT ALL PANEL EDGES AND ENDS. INSTALL 2x SOLID BLOCKING AT ALL UNFRAMED PANEL EDGES AND ENDS WITH MINIMUM 2x SOLID BLOCKING, UNO (SEE NOTES 4 AND 5 FOR 3x REQUIREMENTS). SPACE NAILS MINIMUM 3/8" FROM EDGES AND ENDS OF WALL PANELS, WALL STUDS, TOP AND BOTTOM PLATES, AND BLOCKING. NAIL INTERMEDIATE FRAMING MEMBERS WITH PANEL NAILING @ 12" OC. WHERE SHEATHING IS 7/16" THICK AND STUD SPACING IS 24" OC, NAIL SHEATHING TO INTERMEDIATE FRAMING WITH PANEL NAILS @ 6" OC.
3. BOTTOM PLATE NAILING SHALL PENETRATE INTO RIMBOARD OR BLOCKING BELOW, WHERE OCCURS. SINGLE ROWS OF NAILING SHALL BE CENTERED IN THE BLOCKING OR RIMBOARD BELOW. WHERE MULTIPLE ROWS OF NAILING IS REQURIED, OFFSET ROWS AT LEAST 1 1/2" AND STAGGER NAILS AND MAINTAIN 1/2" MINIMUM FROM EDGES. WHERE MULTIPLE ROWS OF NAILS ARE SPECIFIED, BLOCKING OR RIM BOARD BELOW SHALL BE 3 1/2" WIDE MINIMUM.
4. INSTALL 3x WALL STUDS AT ADJOINING VERTICAL PANEL EDGES AND 3x SOLID BLOCKING AT ADJOINING HORIZONTAL EDGES. STAGGER PANEL EDGE NAILING 1/2" AND MAINTAIN SUFFICIENT EDGE DISTANCE TO AVOID SPLITTING OF WOOD.
5. (2) 2x WALL STUDS AND BLOCKING ARE PERMITTED TO BE SUBSTITUTED FOR RESPECTIVE 3x FRAMING AT ADJOINING PANEL EDGES WHERE SPECIFIED. FASTEN (2) 2x FRAMING TOGETHER WITH 0.148" DIA x 3 1/4" NAILS AT THE SPECIFIED SPACING. WHERE MULTIPLE ROWS OF NAILS ARE SPECIFIED, SPACE ROWS 1 1/2" APART AND STAGGER. MAINTAIN SUFFICIENT EDGE DISTANCE TO AVOID SPLITTING OF WOOD.
6. AT SILL PLATES, EMBED ANCHOR RODS A MINIMUM OF 7" INTO CONCRETE, SEE DETAILS. INSTALL STEEL PLATE WASHER BETWEEN THE SILL PLATE AND NUT AT EACH ANCHOR ROD. LOCATE PLATE WASHER SUCH THAT EDGE OF PLATE WASHER IS 1/2" MAX AWAY FROM EACH EDGE OF SILL PLATE RECEIVING PANEL EDGE NAILING FROM SHEAR WALL SHEATHING, SEE ENLARGED DETAIL TO THE LEFT. HOLE IN PLATE WASHER IS PERMITTED TO BE DIAGONALLY SLOTTED WITH A MAXIMUM WIDTH 3/16" > BOLT DIAMETER AND MAXIMUM LENGTH OF 1 3/4", PROVIDED STANDARD CUT WASHER INSTALLED BETWEEN PLATE WASHER AND NUT.
7. TOP PLATE CONNECTORS IDENTIFIED AS "A35", AND "LTP4" ARE MANUFACTURED BY SIMPSON STRONG-TIE. WHERE CONNECTORS ARE SPECIFIED ON BOTH SIDES, CONNECTORS SHALL BE STAGGERED TO AVOID INTERFERENCE. SEE GENERAL STRUCTURAL NOTES FOR ADDITIONAL INFORMATION AND FOR ADDITIONAL REQUIREMENTS WHEN CONNECTORS ARE IN CONTACT WITH PRESERVATIVE TREATED OR FIRE RETARDANT TREATED LUMBER.
8. SHEAR WALL CAPACITIES ARE BASED ON THE USE OF GALVANIZED BOX OR POWER DRIVEN NAILS OF THE DIAMETER AND LENGTH INDICATED. NAILS PENETRATING INTO PRESSURE-TREATED OR FIRE RETARDANT TREATED LUMBER SHALL BE HOT-DIPPED GALVANIZED NAILS PER GENERAL STRUCTURAL NOTES.
9. SDS SCREWS ARE MANUFACTURED BY SIMPSON STRONG-TIE WHERE MULTIPLE ROWS OF SDS SCREWS ARE SPECIFIED, SPACE ROWS 1 1/2" APART AND STAGGER. MAINTAIN SUFFICIENT EDGE DISTANCE.
10. WHERE WALL SHEATHING PANELS ARE APPLIED ON EACH SIDE OF WALL, PANEL JOINTS SHALL BE OFFSET TO FALL ON DIFFERENT FRAMING MEMBERS. WHERE WALL SHEATHING PANELS ARE APPLIED ON EACH SIDE OF WALL, PANEL JOINTS SHALL BE OFFSET TO FALL ON DIFFERENT FRAMING MEMBERS.

12 SHEAR WALL SCHEDULE 10d DF
NTS

HOLDOWN SCHEDULE - WITH SCREWS

MARK	MODEL (NOTE 1)	WOOD POST (NOTE 2)	2x POST NAILING (NOTE 3)	# OF SDS2.5 TO POST (NOTE 1)	SECOND ROW EDGE NAILING	TO CONCRETE (NOTES 4) THREADED ROD (NOTES 5) DIA	TR CONCRETE EMBED EPOXY GROUTED FOOTING
HD1	HDU2-SDS2.5	(2) 2x	12d @ 12" OC	6	NO	5/8"	6"
HD2	HDU4-SDS2.5	(2) 2x	12d @ 8" OC	7	YES	5/8"	8"
HD3	HDU5-SDS2.5	(2) 2x	12d @ 7" OC	8	YES	5/8"	10"

1

NOTES:

1. "SDS2.5" IS 1/4" DIA x 2 1/2" STRONG-DRIVE WOOD SCREW (MODEL SDS25212), MANUFACTURED BY SIMPSON STRONG-TIE.
2. SIZES LISTED IN THE SCHEDULE ARE FOR THE NOMINAL THICKNESS OF WOOD POST PERPENDICULAR TO THE HOLDOWN. WIDTH OF THE POST IS THE SAME AS THE WIDTH OF THE WALL IN WHICH THE HOLDOWN IS LOCATED.
3. FASTEN TOGETHER 2x MEMBERS OF POST AT THE SPECIFIED SPACING. "12d" NAIL IS 0.148" DIA x 3 1/4" AT (3) 2x POSTS, FASTEN SECOND TO FIRST STUD AND THIRD TO SECOND STUD AT THE SPECIFIED SPACING.
4. "AB" IS A STRAIGHT, HEX-HEADED, CARBON STEEL ANCHOR BOLT COMPLYING WITH ASTM F1554, GRADE 36, CLASS 2A.
5. "TR" IS A CARBON STEEL STUD (e.g. THREADED ROD) COMPLYING WITH ASTM A307, GRADE A.

9 HOLDOWN SCHEDULE - WITH SCREWS
NTS

RICE fergus MILLER
ARCHITECTURE INTERIORS PLANNING VIZLAB
275 FIFTH STREET, SUITE 100
BREMERTON, WA 98337
360-377-8773
RFMARCH.COM

Reid Middleton
728 134th Street SW, Suite 200
Everett, Washington 98204
Ph: 425.741.3800
www.reidmiddleton.com

© Copyright 2024 Reid Middleton, Inc.

KATHERINE B. KRALT
STATE OF WASHINGTON
19567
STRUCTURAL ENGINEER
PROFESSIONAL ENGINEER
10/28/24

HQ INTERIOR OFFICE REMODEL & ROOF REPAIRS
GIG HARBOR FIRE AND MEDIC ONE
10222 BUJACICH ROAD NW
GIG HARBOR, WA 98332

PROJECT # 262024.076

BID SET

ISSUE DATE OCTOBER 22, 2024

REVISION SCHEDULE

1	ADDENDUM 01	11/1/2024

AHJ APPROVAL STAMP

SECTIONS AND DETAILS

SHEET #
Si41.01

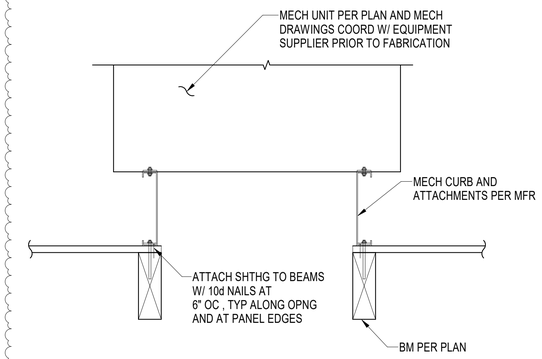

3 OPENING IN THE WOOD FRAMING
NTS

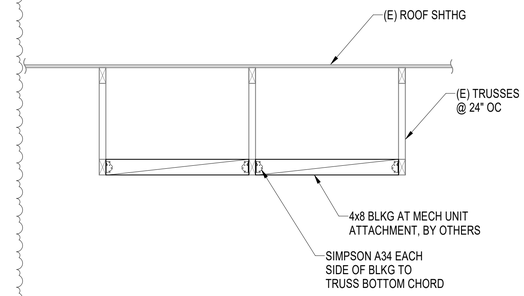

4 HANGING MECHANICAL UNIT BLKG ATTACHMENT
NTS

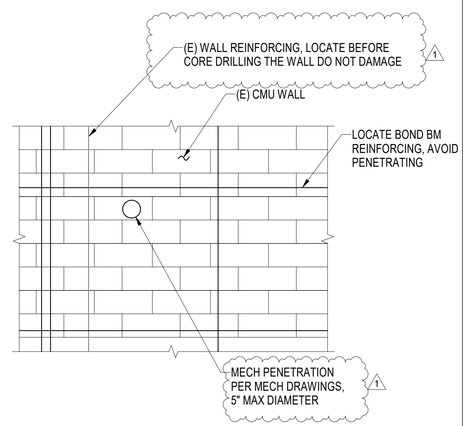

6 CMU WALL PENETRATION MORTAR JOINTS
NTS

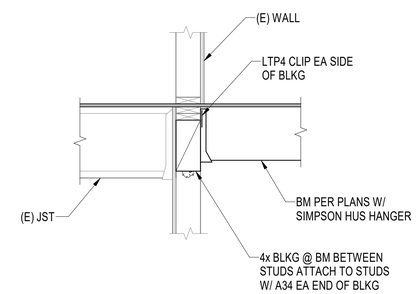

7 MECHANICAL BEAM TO EXISTING WALL
NTS

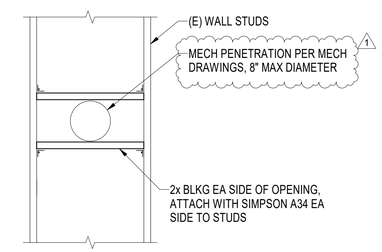

NOTE:

1. SHEATHING NOT SHOWN FOR CLARITY.

8 WOOD WALL PENETRATION BETWEEN STUDS
NTS

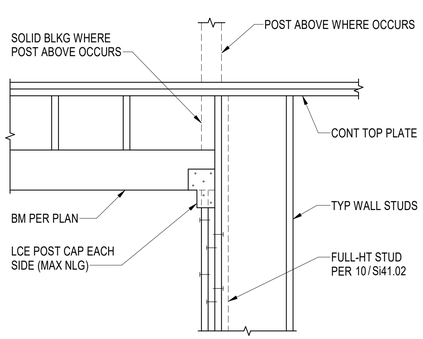

9 TYPICAL HEADER DETAIL
3/4" = 1'-0"

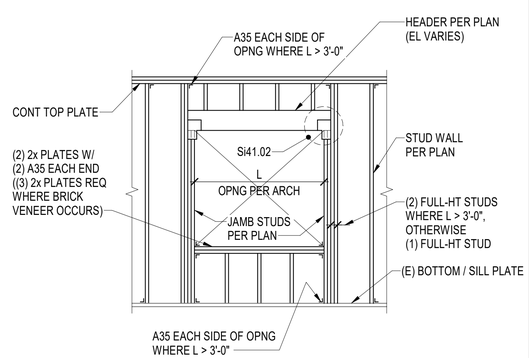

10 TYPICAL STRUCTURAL WALL OPENING
3/8" = 1'-0"

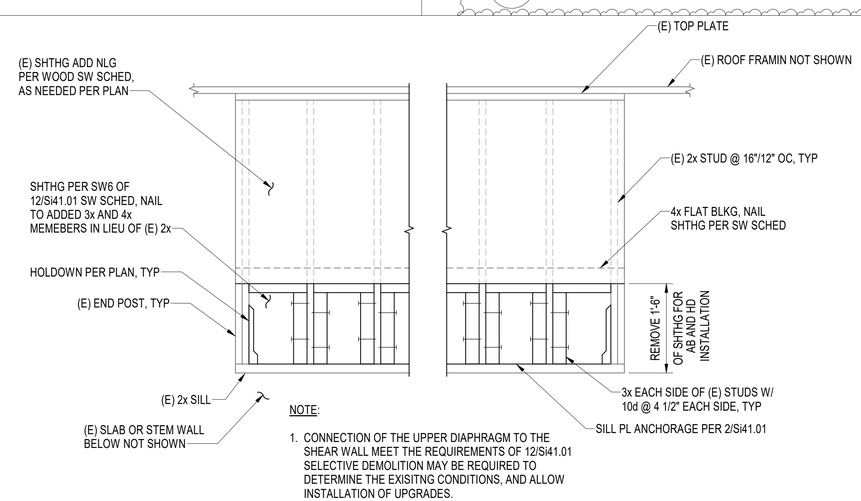

NOTE:

1. CONNECTION OF THE UPPER DIAPHRAGM TO THE SHEAR WALL MEET THE REQUIREMENTS OF 12/Si41.01 SELECTIVE DEMOLITION MAY BE REQUIRED TO DETERMINE THE EXISITNG CONDITIONS, AND ALLOW INSTALLATION OF UPGRADES.

12 SHEAR WALL ELEVATION
3/4" = 1'-0"

RICE fergus MILLER
ARCHITECTURE INTERIORS PLANNING VIZLAB
275 FIFTH STREET, SUITE 100
BREMERTON, WA 98337
360-377-8773
RFMARCH.COM

Reid Middleton
728 134th Street SW, Suite 200
Everett, Washington 98204
Ph: 425.741.3800
www.reidmiddleton.com

© Copyright 2024 Reid Middleton, Inc.

KATHERINE B. KRALLY
STATE OF WASHINGTON
19567
STRUCTURAL ENGINEER
PROFESSIONAL ENGINEER
10/28/24

HQ INTERIOR OFFICE REMODEL & ROOF REPAIRS
GIG HARBOR FIRE AND MEDIC ONE

10222 BUJACICH ROAD NW
GIG HARBOR, WA 98332

PROJECT # 262024.076

BID SET

ISSUE DATE OCTOBER 22, 2024

REVISION SCHEDULE

1	ADDENDUM 01	11/1/2024

AHJ APPROVAL STAMP

SECTIONS AND DETAILS

SHEET #

Si41.02