PROJECT MANUAL

FOR

Gig Harbor Fire & Medic One Stations 53 & 57 Additions

BID SET

January 8, 2024

Prepared for:
Gig Harbor Fire & Medic One
10222 Bujacich Avenue NW
Gig Harbor, WA 98332

By:
Rice Fergus Miller, Inc.
275 5th Street, Ste. 100
Bremerton, WA 98337

RICE fergus MILLER
ARCHITECTURE & PLANNING

PROJECT DIRECTORY

OWNER:	GIG HARBOR FIRE & MEDIC ONE 10222 Bujacich Road NW Gig Harbor, WA 98332 Tel: (253) 851-3111 Contact: Dennis Doan, Fire Chief
ARCHITECT:	RICE FERGUS MILLER, INC. 275 5th Street, Suite 100 Bremerton, WA 98337 Tel: (360) 377-8773 Contact: Gunnar Gladics, Principal-In-Charge, ggladics@rfmarch.com Contact: Howard Struve, Project Manager, hstruve@rfmarch.com
STRUCTURAL ENGINEER:	REID MIDDLETON, INC. 728 134th Street SW Everett, WA 98204 Tel: (425) 741-3800 Contact: Katy Brawner, kbrawner@middleton.com
CIVIL ENGINEER:	MACKAY SPOSITO 33810 Weyerhaeuser Way S., Suite 130 Federal Way, WA 98001 Tel: (253) 237-7932 Contact: Eric Pilcher, epilcher@mackaysposito.com
MECHANICAL ENGINEER:	SIDER & BYERS 192 Nickerson, Suite 300 Seattle, WA 98109 Tel: (206) 285-2966 Contact: James Whigham, james@siderbyers.com
ELECTRICAL ENGINEER:	BCE ENGINEERS, INC. 6021 12th Street E, Suite 200 Fife, WA 98424 Tel: (253) 922-0446 Contact: Carrie Taylor, carrie.taylor@bceengineers.com
LANDSCAPE ARCHITECT:	MACKAY SPOSITO 33810 Weyerhaeuser Way S., Suite 130 Federal Way, WA 98001 Tel: (253) 237-7932 Contact: Eric Pilcher, epilcher@mackaysposito.com

Section #	Section Name	Page Count
	Cover	1
	Overleaf	1
DIVISION 00 - PROCUREMENT AND CONTRACTING REQUIREMENTS		
001113	Invitation to Bid	2
002113	Instructions to Bidders	7
003100	Information Available to Bidders	1
003100.01	Updated Seismic Parameters & Geotechnical Report, Proposed Fire Station 53 Addit	18
003100.02	Construction Stormwater Pollution Prevention Plan - Station 53	29
003100.03	Updated Seismic Parameters & Geotechnical Report, Proposed Fire Station 57 Addit	18
003100.04	Construction Stormwater Pollution Prevention Plan - Station 57	29
004113	Bid Form	8
004113.01	Bidder's Checklist	2
004114	Owner-Contractor Agreement	11
007213	General Conditions of the Contract	1
007300	Supplemental Conditions	16
DIVISION 01 - GENERAL REQUIREMENTS		
011000	Summary	2
012500	Substitution Procedures	3
012600	Contract Modification Procedures	2
012900	Payment Procedures	5
013100	Project Management and Coordination	8
013200	Construction Progress Documentation	4
013300	Submittal Procedures	8
014000	Quality Requirements	7
014200	References	7
015000	Temporary Facilities and Controls	6
016000	Product Requirements	4
017300	Execution	8
017419	Construction Waste Management	3
017700	Closeout Procedures	5
017823	Operations and Maintenance Data	5
017839	Project Record Documents	3
017900	Demonstration and Training	
DIVISION 02 – EXISTING CONDITIONS		
024119	Selective Demolition	3
028200	Asbestos Abatement	22
028300	Heavy Metals Containing Materials - Station 53	8
028300	Lead in Construction - Station 57	7
028417	Universal Other Regulated Waste Activities	7
DIVISION 03 - CONCRETE		
033000	Cast-In-Place Concrete	12
DIVISION 04 - MASONRY		
	NOT USED	
DIVISION 05 - METALS		
	NOT USED	
DIVISION 06 - WOOD, PLASTICS, AND COMPOSITES		
061000	Rough Carpentry	6

062000	Finish Carpentry	3
064100	Architectural Wood Casework	4

DIVISION 07 - THERMAL AND MOISTURE PROTECTION

072100	Thermal Insulation	3
072500	Weather Barriers	4
074113	Metal Roof Panels	3
074646	Fiber Cement Siding	3
076200	Sheet Metal Flashing and Trim	4
078400	Firestopping	4
079005	Joint Sealers	3

DIVISION 08 - OPENINGS

081113	Hollow Metal Doors and Frames	4
081416	Flush Wood Doors	3
085313	Vinyl Windows	3
087100	Door Hardware	8
088300	Mirrors	2

DIVISION 09 - FINISHES

092116	Gypsum Board Assemblies	3
093000	Tiling	4
095100	Acoustical Ceilings	4
096500	Resilient Flooring	2
096566	Resilient Athletic Flooring	3
096813	Tile Carpeting	2
099113	Exterior Painting	4
099123	Interior Painting	6
099300	Staining and Transparent Finishing	3

DIVISION 10 - SPECIALTIES

102600	Wall and Corner Protection	2

DIVISION 11 - EQUIPMENT

NOT USED

DIVISION 12 - FURNISHINGS

NOT USED

DIVISION 13 – SPECIAL CONSTRUCTION

NOT USED

DIVISION 14 - CONVEYING EQUIPMENT

NOT USED

DIVISION 21 - FIRE SUPPRESSION

210000	Fire Suppression General Conditions	8
210500	Common Work Resulrs for Fire Suppression	8
211316	Dry-Pipe Sprinkler Systems	3

DIVISION 22 - PLUMBING

220000	Plumbing General Conditions	11
220500	Common Work Results for Plumbing	13
220700	Plumbing Insulation	4
221100	Facility Water Distribution	7
221300	Facility Sanitary Sewerage	6
222600	Liquid Petroleum Gas Systems	4
224000	Plumbing Fixtures	4

DIVISION 23 - HVAC

230000	HVAC General Conditions	12
230500	Common Work Results for HVAC	15

230593	Testing, Adjusting and Balancing	6
230700	HVAC Insulation	7
230800	Project Commissioning	8
230900	Instrumentation and Control for HVAC	5
232300	Refrigerant Piping	5
233100	HVAC Ducts and Casings	6
233300	Air Duct Accessories	7
233700	Air Outlets and Inlets	4
234000	HVAC Filters	1
237200	Energy Recovery Units	3
238126	Split-System Air Conditioners and Heat Pumps	4
238323	Electrical Terminal Heating Units	2
DIVISION 26 - ELECTRICAL		
260000	Electrical General Conditions	11
260519	Wire and Cables	2
260526	Grounding and Bonding for Electrical Systems	1
260532	Outlet and Pull Boxes	3
260533	Raceway and Wireway for Electrical Systems	3
260534	Metal Clad (MC) Cable & Fittings	3
262416	Panelboards	3
262419	Motor Controllers	2
262726	Switches and Receptacles	3
262813	Fuses	1
262816	Disconnects and Fused Switches	1
265000	Lighting	4
DIVISION 27 - COMMUNICATIONS		
270000	Low Voltage System General Requirements	28
270528	Pathways for Communications Systems	5
272000	Data and Voice Infrastructure	13
DIVISION 28 - ELECTRONIC SAFETY AND SECURITY		
	NOT USED	
DIVISION 31 - EARTHWORK		
311000	Site Clearing	4
312000	Earth Moving	5
312500	Erosion and Sediment Control	5
DIVISION 32 – EXTERIOR IMPROVEMENTS		
321216	Asphalt Paving	7
321313	Concrete Paving	9
321343	Pervious Concrete Paving	11
329113	Soil Preparation	7
329200	Turf and Grasses	8
DIVISION 33 - UTILITIES		
331400	Water System	3
333113	Site Sanitary Sewage	3
334116	Subdrainage Piping	2
334200	Stormwater Conveyance	3

INVITATION TO BID

GIG HARBOR FIRE AND MEDIC ONE, PIERCE COUNTY, WASHINGTON

DATE OF BID OPENING: **February 6, 2024**	TIME: **2:30 PM PDT**

PUBLIC NOTICE
ADVERTISEMENT FOR BIDS

Notice is hereby given that the sealed bids will be received by Gig Harbor Fire and Medic One (Owner), Gig Harbor, Washington, for:

Gig Harbor Fire and Medic One Stations 53 and 57 Additions

First Publication January 8, 2024, and Second Publication January 16, 2024 'Seattle Daily Journal of Commerce' and 'The News Tribune'.

Sealed bids will be received by Gig Harbor Fire and Medic One up to but not later than **2:00 pm, February 6, 2024**, at the address listed below. The bids will then be publicly opened, recorded, and read in the conference room and online via the District's website on **February 6, 2024, at 2:30 pm**. The link for the bid opening is located on the District's website at https://www.gigharborfire.org/about/bond/. **Bids received later than 2:00 pm will not be considered.**

The engineer's estimate for construction cost of Fire Station 53 is $1,366,808, and for Fire Station 57 is $1,522,083, not including sales tax. **It is the Owner's intent to award a single contract for both Fire Station 53 and Fire Station 57 of the project scope of work.**

PRE-BID MEETING: A non-mandatory pre-bid conference will be held at Gig Harbor Fire and Medic One Fire Station 57, 10521 Crescent Valley DR NW, Gig Harbor WA 98332. The conference is intended to provide prospective bidders with a general review and opportunity to visit the project sites prior to submitting bids. This pre-bid meeting will take place on **January 18, 2024, at 9:00 am**.

QUESTIONS: All questions regarding the project (including prior to, during, and after the site visit) shall be submitted via email with subject line "Gig Harbor Fire and Medic One Stations 53 & 57 Additions: Bid Question" to Howard Struve (HStruve@rfmarch.com) at Rice Fergus Miller. Questions received via phone or any other method other than email will not be accepted. Bidder shall submit questions no later than **12:00 pm, Wednesday January 31, 2024**. Receipt of questions will be acknowledged; however, all bidder questions will be answered via Addenda.

BID BOND REQUIREMENT: Each bid shall be accompanied by a bid bond in the form of certified check,

cashier's check, or surety bond in an amount equal to at least 5-percent (5%) of the amount of such bid proposal. Checks shall be made payable to the Gig Harbor Fire and Medic One. Should the successful bidder fail to enter a contract and furnish a satisfactory performance bond within the time stated in the specifications, the bid proposal deposit shall be forfeited.

BID DOCUMENTS: Plans and specifications for this project are available on-line: Builders Exchange of Washington, Inc. (bxwa.com). Plans, Specifications and Addenda may be viewed and obtained online at www.bxwa.com. Click on: "Posted Projects", "Public Works", "Gig Harbor Fire and Medic One Stations 53 and 57 Additions". The Bidder's List is maintained by the Builder's Exchange of Washington, Inc. Registration for the bidder's list may be made online, by phoning (425) 258-1303, or at Builder's Exchange of Washington located at 2607 Wetmore Ave, Everett, WA.

Contractors may also obtain bid documents from ARC Tacoma - 632 Broadway Tacoma, WA 98402, Tacoma.bidservices@e-arc.com, 1-800-337-8103 or 253-383-6363, upon depositing a refundable sum of $250.00 made payable to Gig Harbor Fire and Medic One. General Contractors: maximum of 2 sets; subcontractors and material suppliers: maximum of 1 set. To download or view complete PDF bid documents for the project free of charge, go to the ARC Public Planroom at https://customer.e-arc.com/arcEOC/Secures/PWELL_PrivateList.aspx?PrjType=pub and search by "Gig Harbor Fire and Medic One Stations 53 and 57 Additions."

SUPPLEMENTAL RESPONSIBLE BIDDER CRITERIA

PREVAILING WAGE: This project is subject to meet Washington State prevailing wages rates applicable for public works located in Pierce County. Bidders are responsible to verify and use the most recent prevailing wage rates. The "Effective Date" for this Project is the Bid Form due date above. The applicable prevailing wage rates may be found on the Department of Labor & Industries website located at: https://lni.wa.gov/licensing-permits/public-works-projects/prevailing-wage-rates/

EQUAL OPPORTUNITY/AFFIRMITIVE ACTION: Owner is an equal opportunity and affirmative action employer. Small, Minority and Women-Owned firms are encouraged to submit bids.

WITHDRAWAL OF BID: No bid may be withdrawn after the date set for the public bid opening for a period of sixty (60) calendar days.

Envelopes containing the sealed bids shall be marked "Gig Harbor Fire and Medic One: Stations 53 and 57 Additions" and sent or delivered to:

Physical Address for Hand Delivery, Courier/Overnight Delivery:

10222 Bujacich RD NW Gig Harbor WA 98332

Bids will be publicly opened and read at the above address, Conference Room – Alder, at 2:30 pm, February 6, 2024.

INSTRUCTIONS TO BIDDERS

1. TO BE ENTITLED TO CONSIDERATION, PROPOSALS SHALL BE MADE IN ACCORDANCE WITH THE FOLLOWING INSTRUCTIONS:

2. DEFINITIONS

Bidder. Any person or entity that submits a Qualified Bid in response to the Invitation to Bid.

Qualified Bid. Any bid submitted to Owner in response to the Invitation to Bid issued by Owner and which complies with all other bid requirements, including but not limited to the Specifications for this project. The base bid shall include the cost of all labor, materials, bonds and the cost of all direct purchase orders to be purchased by the Owner. Submission of a Qualified Bid shall not necessarily render the Bidder the lowest, qualified and responsible bidder.

Owner. Pierce County Fire Protection District No. Five (Gig Harbor Fire and Medic One) and any authorized representatives thereof.

Architect. Rice Fergus Miller, Inc., and any authorized representatives thereof.

Acceptance. The term acceptance shall mean that time at which Owner indicates that the product, as received, substantially complies with the Instructions to Bidders.

Specifications. The specifications set forth in the Contract Documents and/or Project Manual for this project.

Instructions to Bidders. This document and AIA A701-2018, incorporated herein by reference, copies of which may be obtained my mailing the American Institute of Architects at 1735 New York Ave NW, Washington DC, 20006, or local chapter offices. In the event of any conflict between this document and AIA A701-2018, *this document shall control*.

Form of Proposal. The Bid Form, otherwise known as the PROPOSAL FORM, attached hereto as part of the Contract Documents.

3. EXAMINATION OF SITE CONDITIONS

Before submitting a proposal, the Bidder shall:

A. Carefully examine all Contract Documents (drawings, and summary of work/bid items).

B. Visit the site of the Work. The submission of a Bid shall be evidence that a site visit and examination of local conditions has been made. Later claims for labor and supplies due to circumstances which may have been uncovered by the above visit and examination shall not be allowed.

C. Fully inform himself[1] of all existing conditions, limitations, and existing site and surrounding improvements including all items to be removed and protected in the course of executing the Contract.

D. Rely upon his own judgment in preparing his Proposal.

E. Include in his Bid a sum sufficient to cover all items required by the Contract.

F. It is mutually agreed that submission of a proposal shall be considered prima facie evidence that the bidder has made such examination and is satisfied as to the conditions to be encountered, and as to the requirements of the Contract Documents.

G. Failure of the bidder to take the above-noted precaution will not release the successful bidder from entering into contracts, nor excuse him from performing the Work in strict accordance with the terms of the Contract. No extra payment will be allowed for additional work due to failure to obtain this information. No statement made by any officer, agent or employee of the Owner in relation to the physical conditions pertaining to the site of the Work will be binding on the Owner.

4. INTERPRETATION OF CONTRACT DOCUMENTS

Any person contemplating submitting a Bid for the proposed contract, who is in doubt as to the true meaning of any part of the Plans, Summary of Work/bid Items, or other proposed Contract Documents, shall submit to the Architect a request for an interpretation. The person submitting the request shall be responsible for its prompt delivery. Any interpretation of the proposed Contract Documents will be made only by a duly issued Addendum. Requests for interpretation must be made in writing. Addenda issued during the time of bidding will be incorporated into the contract. Questions received less than five days prior to bid opening cannot be answered.

The Architect's approval or disapproval of a proposed substitution or modification shall be final and the Architect shall inform the Bidder as to its final decision.

5. LAWS AND REGULATIONS

The bidder is assumed to be familiar with all Federal, State and County laws and regulations, which in any manner affect those engaged or employed in the work, or the materials and equipment used in the proposed work or which in any way affect the conduct of the work, and no pleas of misunderstanding will be considered on account of ignorance thereof.

[1] Herein, the term "him" or similar iteration shall be deemed a reference to both genders, and may be construed to refer to a corporation, partnership or other legal entity.

Should the Bidder discover any provision in the Drawings, Summary of Work/bid Items or other Contract Document, which is contrary to or inconsistent with any law or regulation, he shall report any such inconsistency forthwith to the Engineer. Any required amendment to the Drawings, Summary of Work/bid Items or other Contract Document resulting from such discovery will be revised by a duly issued Addendum.

6. BIDS

Bids shall be submitted in lump sum form, using the Form of Proposal included in the Contract Documents. Bids shall be in a sealed envelope and shall be delivered to the address specified in the Advertisement for Bid no later than the deadline for submittal listed in the Advertisement for Bid. No bid may be withdrawn after the deadline or before the award of contract unless said award is delayed for a period of 60 days.

The submission of a Bid constitutes acceptance by the Bidder of products and procedures specified as sufficient, adequate and satisfactory for completion of the Contract. Bids received after the closing time and receipt for the opening of Bids shall be rejected and may be returned to the Bidder un-opened.

Failure to properly complete the Form of Proposal shall render any submission non-responsive.

7. BID DEPOSIT

As a guarantee of good faith and as required by law, each bid shall be accompanied by a Bid Deposit in the form of a certified check, cashier's check, or surety bond, payable to the order of Pierce County Fire Protection District No. Five, for an amount not less than 5 percent of the total amount of the bid.

Unsuccessful bidders shall have their Bid Deposit returned within 30 working days of contract execution by the successful bidder.

8. RETAINAGE

Pursuant to RCW 60.28, the District will retain five percent (5%) of the moneys earned by the contractor on any estimates during the progress of the improvement or work, as a trust fund for the protection and payment of claims of persons arising under the contract and the state for taxes duly imposed pursuant to law. The retainage and all other provisions of RCW 60.28 shall be followed by the District in administering this contract.

9. EVIDENCE OF QUALIFICATION

A bidder whose Proposal is under consideration shall, upon request, promptly furnish satisfactory evidence of his financial resources, his experience, and the organization and equipment he has available for the performance of the Contract. The competency and responsibility of the Bidder will be considered in making the "Award of Contract". The party submitting a Proposal shall be registered with the state of Washington as a general

contractor (in accordance with CHAPTER 18.27 RCW) and shall furnish state registration number and local permits as required by the Contract Documents.

To be determine whether the Bidder is the lowest, qualified and responsible bidder, the Owner may consider the Bidder's experience, skill, facility, previous work standing and reputation, capacity and ability to handle work in addition to that in progress, and the quality and efficiency of construction plans and equipment proposed to be used on the Project; and the Owner shall consider whether the Bidder is responsible as per the criteria set forth under RCW 39.04.350 (1).

10. EXECUTION OF PROPOSAL FORMS

The PROPOSAL FORM invites bids on definite Plans and Summary of Work/bid Items. Only the amounts and information asked for on the PROPOSAL FORM furnished will be considered as the BID. Each Bidder shall bid upon the Work exactly as described by the Contract Documents, and as provided for in the PROPOSAL FORM. The Bidder shall bid upon all Alternate Bid and/or Unit Price items requested on the PROPOSAL FORM as provided herein.

A. Form of Proposal:

The Bidder shall submit his proposal on the forms furnished in the Bid Document package. **All blank spaces in the PROPOSAL FORM shall be properly filled in.** All Form of Proposal bid amounts shall be stated in "words" and in "numerical figures".

All Bid Amounts shall be "typed" or "written" in ink.

No oral proposals will be considered or accepted.

B. Prohibition of Alterations:

Except as otherwise provided herein. Proposals which are incomplete, which are conditioned in any way, which contain erasures, alterations, items not called for in the Proposal, or which are not in conformity to the law, may be rejected as non- responsive.

C. Proposal Sums:

Any sum of money written in by the Bidder on the PROPOSAL FORM shall cover all Work and costs identified by the bid item description as defined by the Contract Documents, together with any Addenda thereto. All Bid Proposal Sums furnished by the bidder shall include all "Direct and "Indirect" costs of labor, material, equipment, overhead, profit, and any form of compensation sufficient to complete all of the Work under each particular description.

When bidding an Alternate Bid Item for which there is no charge or no change from the Base Bid Amount, the Bidder shall write in the words "NO CHARGE" in the space provided.

No Washington State Sales Tax shall be included in the Proposal Sums.

D. Taxes:

Any sum of money written in by the Bidder on the Proposal Form, and any agreed variations thereof, shall include all taxes imposed by law, **excepting** only Washington State Sales Tax. Washington State Sales Tax will be collected from the Owner and shall be paid to the State of Washington by the contractor in conformance with the law. The contractor shall furnish the Owner with proof of payment of all taxes required by law.

E. Signatures:

If the Proposal is made by a partnership, it shall be so stated and it shall contain the names of each partner and shall be signed in the firm name, followed by the signatures of the partners. If the Proposal is made by a corporation, it shall be signed in the legal name of the corporation, followed by the written signature of the officer signing, followed below by the typed name of the signing officer and the printed or typewritten designation of the office he or she holds in the corporation. The address of the Bidder shall be typed or printed on the Form of Proposal in the space provided.

F. Registration Numbers:

Bidder's Washington State Contractor's License Registration number shall be stated in the space provided.

G. Sub-Contractors

Each Bidder shall submit as part of the Form of Proposal a list of sub-contractors for each major branch of work itemized or described in the specifications for this Project. Listing of a sub-contractor in the Form of Proposal shall constitute the Bidder's certification that the sub-contractor is responsible and has in current employment skilled staff, and possesses the necessary equipment to accomplish the work requested.

Changing subcontractors from those listed in the Form of Proposal is prohibited unless the Bidder provides grounds for such a change that are consistent with the Instructions to Bidders. Said change shall be accompanied by a written explanation by the Bidder as well as a written release from the listed subcontractor. An unjustifiable change of subcontractors may invalidate the bid. Any change in subcontractors must be provided to the Owner within ten working days of bid opening.

11. SUBMISSION OF PROPOSAL

No oral proposals will be considered.

All Forms of Proposal shall be submitted in accordance with the requirements of the Advertisement to Bid and Instruction to Bidders, Special Conditions and General Conditions.

12. MODIFICATION AND WITHDRAWAL OF PROPOSAL

Prior to closing time for receipt of proposals, any Bidder may modify or withdraw his Proposal. All such modifications or withdrawals must be made in writing on the Bidder's company letterhead and over the signature of the Bidder. Any modification must be received by Owner three working days prior to bid opening. The Bidder must indicate what provision of the previous proposal is being modified and clearly identify any labor, materials and equipment cost changes resulting from the modification. Modifications must be mailed to the same address above enumerated in Section 11 or as set forth in the Advertisement for Bid.

13. SUBSTITUTIONS

Bids shall be based upon the materials and equipment names in the Contract Documents.

14. ACCEPTANCE OR REJECTION OF PROPOSAL

The Owner reserves the right to reject any and/or all Proposals. The Owner also reserves the right to waive any informality in conjunction with said Proposal or Bids. If the proposal includes a supplemental schedule of predetermined unit prices for labor and material, or other Items for the purpose of establishing a cost basis on unforeseen contract changes, the Owner reserves the right to reject, without impairing the balance of the proposal, any or all predetermined unit prices on such supplemental schedules which the Owner may consider excessive or unreasonable. The Owner reserves the right to award the contract to the lowest, qualified and responsible bidder and is therefore not obligated to accept the low bid.

15. CONFLICTS OF INTEREST

Bidders must certify that no officer, agent, or employee of Pierce County Fire Protection District 5 who has participated in the contract negotiations on the part of Pierce County Fire Protection District 5 has a pecuniary interest in the bid proposal and that the proposal is made in good faith without fraud, collusion, or participation of any kind by any other bidder under the same call for bids and that the bidder is submitting the bid in its own behalf and not as an undisclosed agent of any person or firm.

The Contract Price will be determined by selection among the various proposed Bid Items as approved by the Owner.

16. FORM OF AGREEMENT BETWEEN OWNER AND CONTRACTOR

The successful Bidder shall, within ten working days of receipt of the Form of Agreement Between Owner and Contractor, execute and return said Agreement to the address stated in the Advertisement for Bids.

END OF SECTION

SECTION 003100 - INFORMATION AVAILABLE TO BIDDERS

PART 1 GENERAL

1.1 PIERCE COUNTY PREVAILING WAGE RATES:

A. The following documents are not bound into this Project Manual as an attachment to this Section, for reference only:

1. Prevailing Wage Rates:

Contractor to verify current Prevailing Wage Rates and Benefit Code Key as required per RCW 39.12 and as furnished by the State of Washington Department of Labor and Industries (Employment Standards Section) Department of Labor & Industries website is http://www.lni.wa.gov/tradeslicensing/prevwage/wagerates/ Contractor to verify apprenticeship requirements as required by Contract Documents. Department of Labor and Industries website is: https://fortress.wa.gov/lni/wagelookup/ApprenticeWageLookup.aspx

Section 2 of WAC 296-127-011 states that for all contracts, except Building Service Maintenance Contracts, the prevailing Wage Rates which are in effect on the date when the bids by the Prime Contractor are required to be submitted to the Contract Awarding Public Agency are the prevailing wage rates which must be paid for the duration of the contract.

1.2 REPORTS AND DOCUMENTS

A. The following survey reports and documents that include information on existing conditions at the Project site are bound into this Project Manual as an attachment to this Section.

1. Document: Updated Seismic Parameters, Proposed Fire Station 53 Additions, prepared by Cobalt Geosciences, LLC, dated January 18, 2023.

   Report: Geotechnical Engineering Investigation, Proposed Addition - Fire Station 53, prepared by Kane Environmental, Inc., dated April 14, 2010.
2. Report: Construction Stormwater Pollution Prevention Plan, Gig Harbor Fire & Medic One Station 53, prepared by MacKay Sposito, dated June 22, 2023.
3. Document: Updated Seismic Parameters, Proposed Fire Station 57 Additions, prepared by Cobalt Geosciences, LLC, dated January 18, 2023.

   Report: Geotechnical Engineering Investigation, Proposed Addition - Fire Station 57, prepared by Kane Environmental, Inc, dated April 14, 2010.
4. Report: Construction Stormwater Pollution Prevention Plan, Gig Harbor Fire & Medic One Station 57, prepared by MacKay Sposito, dated July 5, 2023.

PART 2 PRODUCTS (NOT USED)

PART 3 EXECUTION (NOT USED)

END OF SECTION

Cobalt Geosciences, LLC
P.O. Box 82243
Kenmore, Washington 98028

January 18, 2023

Eric Pilcher
epilcher@mackaysposito.com
Howard Struve
Rice Fergus Miller
hstruve@rfmarch.com

RE: Updated Seismic Parameters
Proposed Fire Station 5-3 Additions
906 Kamus Drive
Fox Island, Washington

In accordance with your authorization, Cobalt Geosciences, LLC has prepared this letter to present updated seismic parameters per the most recent International Building Code (IBC). In preparation of this letter, we have reviewed the previous geotechnical report for the project prepared by Kane Environmental (this author). The recommendations in this report remain valid and will/should be attached as part of permitting.

Seismic Hazard

The overall subsurface profile corresponds to a Site Class *D* as defined by Table 1613.5.2 of the International Building Code (IBC). A Site Class *D* applies to an overall profile consisting of medium dense to very dense soils within the upper 100 feet.

We referenced the U.S. Geological Survey (USGS) Earthquake Hazards Program Website to obtain values for S_S, S_1, F_a, and F_v. The USGS website includes the most updated published data on seismic conditions. The following tables provide seismic parameters from the USGS web site with referenced parameters from ASCE 7-16.

Seismic Design Parameters (ASCE 7-16)

Site Class	Spectral Acceleration at 0.2 sec. (g)	Spectral Acceleration at 1.0 sec. (g)	Site Coefficients		Design Spectral Response Parameters		Design PGA/PGA_M
			F_a	F_v	S_{DS}	S_{D1}	
D	1.412	0.494	1.0	Null	0.941	Null	0.516/0.567

Additional seismic considerations include liquefaction potential and amplification of ground motions by soft/loose soil deposits. The liquefaction potential is highest for loose sand with a high groundwater table. The site has a low likelihood of liquefaction. For items listed as "Null" see Section 11.4.8 of the ASCE.

We should review the final plans when they become available to verify that the recommendations contained in the Kane report (this author) remain valid and do not require updating.

Closure

The information presented herein is based upon professional interpretation utilizing standard practices and a degree of conservatism deemed proper for this project. We emphasize that this report is valid for this project as outlined above and for the current site conditions and should not be used for any other site.

Sincerely,

Cobalt Geosciences, LLC

1/18/2023
Phil Haberman, PE, LG, LEG
Principal

KANE
ENVIRONMENTAL INC

Geotechnical Engineering Investigation
Proposed Addition – Fire Station 5-3
906 Kamus Drive
Fox Island, Washington

Prepared For:

Pierce County Fire District No 5
C/O Rice Fergus Miller Architecture and Planning
Attn: Mr. Howard Struve
262 – 4th Street
Bremerton, Washington 98337

April 14, 2010

Prepared By:

Kane Environmental, Inc.
3831 Stone Way Avenue North
Seattle, WA 98103

State of Washington
Engineering Geologist
2513
Licensed Geologist
4/14/10
PHILLIP HABERMAN

Phil Haberman, P.G., P.E.G.
Senior Engineering Geologist

SEAN LEE CARAWAY
STATE OF WASHINGTON
38046
REGISTERED
PROFESSIONAL ENGINEER
4/14/10

Sean L. Caraway, P.E.
Senior Geotechnical Engineer

PH/sc

TABLE OF CONTENTS

1.0 INTRODUCTION **3**

1.1 Project Description 3
1.2 Scope of Services 3

2.0 SITE DISCUSSION **3**

2.1 Site Location and Description 4
2.2 Geologic Setting 4
2.3 Subsurface Soil Conditions 4
2.4 Groundwater Conditions 5

3.0 GEOLOGIC HAZARDS **5**

3.1 Erosion Hazard 5
3.2 Seismic Hazard 6

4.0 CONCLUSIONS & RECOMMENDATIONS **6**

4.1 Earthwork **7**
4.1.1 Site Preparation 7
4.1.2 Re Use of On Site Native Soils 8
4.1.3 Imported Structural Fill 8
4.1.4 Fill Placement and Compaction Criteria 8
4.1.5 Temporary Excavations 8
4.1.6 Utility Trenches 9
4.1.7 Erosion and Sediment Control 10
4.1.8 Grounwater Influence on Construction 10

4.2 Foundations **11**
4.2.1 Foundation Design 11
4.2.2 Foundation Settlement 11
4.2.3 Lateral Resistance 11
4.2.4 Footing Drainage 12

4.3 Below Grade Walls and Retaining Walls **12**
4.3.1 Design Parameters 12
4.3.2 Wall Drainage 13
4.3.3 Wall Backfill and Compaction 13

4.4 Slab on Grade Floors **13**
4.5 Infiltration **14**
4.6 General Site Drainage **15**
4.7 Pavements **15**
4.8 Testing and Inspection **16**

5.0 LIMITATIONS **16**

6.0 REFERENCES **18**

Figure 1 – Vicinity Map
Figure 2 – Site Plan
Appendix A – Boring Logs

1.0 INTRODUCTION

This report presents the results of our Geotechnical Engineering Investigation for the proposed addition to the existing Fire Station 5-3 located at 906 Kamus Drive in Fox Island, Washington (Figure 1). A site plan showing the approximate boring locations is presented following the text of this report (Figure 2). A description of the field investigation and the boring logs are presented in Appendix A.

1.1 PROJECT DESCRIPTION

The preliminary information we have received indicates that the proposed construction will include a one story addition located along the south side of the existing structure. We anticipate that foundation loads will be light to moderate and that the addition will be supported on a shallow foundation system. We anticipate that site grading will include minor cuts and fills on the order of 2 feet or less. We understand that stormwater management is in the preliminary design phase and the location and depth of any infiltration or detention system has not been determined.

1.2 SCOPE OF SERVICES

This investigation was conducted to evaluate the shallow soil and groundwater conditions at the site, to develop recommendations for use in design of specific construction elements and to provide criteria for site preparation and structural fill construction.

Our scope of services was performed in general accordance with our proposal for this project, dated February 17, 2010 which included the following:

- A site reconnaissance by a member of our engineering staff to evaluate the surface conditions at the project site.
- A field investigation consisting of drilling and sampling three borings within the property for subsurface analysis. The borings ranged in depth from approximately 6.5 to 9 feet below the existing site grades.
- Evaluation of the data obtained from the investigation and completion of engineering analyses to develop recommendations for use in the project design and preparation of construction specifications.
- Preparation of this report summarizing our findings, the results of our analyses and our conclusions and recommendations for this investigation.

2.0 SITE DISCUSSION

This section describes the geologic setting of the project area and the surface and subsurface conditions observed within the project site at the time of our field investigation. Interpretations of the site conditions are based on our review of available information and the results of our site reconnaissance, subsurface explorations, and analyses.

2.1 SITE LOCATION AND DESCRIPTION

The site is located at 906 Kamus Drive in Fox Island, Washington. The general location of the site is shown on Figure 1 (Vicinity Map).

The site is comprised of a rectangular parcel (No. 0120121031) with a total area of approximately 1.65 acres. The fire station structure is located in the west-central portion of the property. Asphalt paved access drives and parking areas are located north, east, and south of the structure. A separate housing structure is located in the east-central portion of the property. Additional steel storage containers and structures are located south of this building. Existing stormwater and/or septic systems appear to be located east of the existing asphalt in the lawn areas north of the residential structure.

The site generally slopes gently downward toward the east at magnitudes on the order of 0 to 6 percent with a total topographic relief of approximately 6 feet. The site is vegetated with landscaping trees and shrubs, as well as grass and sparse evergreen trees.

The site is bordered to the north by Kamus Drive, to the west by 9th Avenue, to the south by the Fox Island Museum, and to the east by residential properties.

2.2 GEOLOGIC SETTING

The site lies within the central Puget Lowland. The lowland is part of a regional north-south trending trough that extends from southwestern British Columbia to near Eugene, Oregon. North of Olympia, Washington, this lowland is glacially carved, with a depositional and erosional history including at least four separate glacial advances/retreats. The Puget Lowland is bounded to the west by the Olympic Mountains, and to the east by the Cascade Range. The lowland is filled with glacial and nonglacial sediments consisting of interbedded gravel, sand, silt, till, and peat lenses.

The Geologic Map of Washington – Northwest Quadrant, indicates that the site is near the contacts of Vashon Glacial Till and Vashon Advance Outwash. Vashon Glacial Till is typically characterized by an unsorted, nonstratified mixture of clay, silt, sand, gravel, cobbles and boulders in variable quantities. These materials are typically dense and relatively impermeable. The poor sorting reflects the mixing of the materials as these sediments were overridden and incorporated by the glacial ice. Vashon Advance Outwash consists of sand and gravel with variable amounts or interbeds of silt and clay deposited in front of the advancing glaciers. These materials are relatively permeable and dense.

2.3 SUBSURFACE SOIL CONDITIONS

A field investigation consisting of drilling and sampling three borings was performed in order to evaluate the shallow subsurface soil and groundwater conditions. The borings ranged in depth from approximately 6.5 to 9 feet below the existing site grades. The drilling work was completed on March 22, 2010 by a Kane Environmental subcontractor with a limited access drill rig.

Representative samples of the subsurface soils encountered in the borings were collected and sealed in plastic bags. These samples were transported to our office for further examination and verification of the field classifications. The soils encountered in the borings were examined and visually classified in

accordance with the Unified Soil Classification System (USCS). A more detailed description of the field investigation is presented in Appendix A.

Borings B-1 and B-3 encountered approximately 4 inches of grass and topsoil underlain by approximately loose to very dense, fine to medium grained sand with variable amounts of gravel and silt (Advance Outwash) which extended to the termination depths of these borings. Boring B-2 encountered approximately 5 inches of topsoil and grass underlain by approximately 3 feet of loose to medium dense, silty-fine to medium grained sand with variable amounts of gravel (Fill). This layer was underlain by dense to very dense, fine to medium grained sand with variable amounts of gravel (Advance Outwash) which extended to the termination depth of the boring.

For additional information about the soils encountered, please refer to the logs of the borings in Appendix A.

2.4 GROUNDWATER CONDITIONS

The borings were checked for the presence of groundwater during and immediately following the drilling operations. Groundwater was encountered in B-2 at 3 feet below the existing site grades at the time of the drilling operations. Groundwater was not encountered in B-1 or B-3 at the time of our exploration work. Groundwater encountered in B-2 appears to be related to on site stormwater and/or septic facilities. We observed 2 to 3 feet diameter green lids in the lawn areas north of the residential structure and east of the existing asphalt.

Water table elevations may fluctuate over time. The groundwater level will be dependent on various factors, which can include seasonal precipitation, irrigation, land use, soil, permeability, and climatic conditions, as well as other factors. Therefore, water levels at the time of the field investigation may be different from those encountered during the construction phase of the project. Groundwater monitoring wells were not installed as part of this investigation, therefore determining long term groundwater fluctuations is beyond the scope of this report.

3.0 GEOLOGIC HAZARDS

3.1 EROSION HAZARD

The Natural Resources Conservation Services (NRCS) maps for Pierce County indicate that the site is underlain by Harstine gravelly sandy loam (0 to 6 percent slopes) with "Slight" erosion potential in a disturbed state.

Typically, soil erosion potential can be reduced through landscaping and surface water runoff control. Typically erosion of exposed soils will be most noticeable during periods of rainfall and may be controlled by the use of normal temporary erosion control measures, such as silt fences, hay bales, mulching, control ditches and diversion trenches.. The typical wet weather season, with regard to site grading, is from October 31st to April 1st. Erosion control measures should be in place before the onset of wet weather.

3.2 SEISMIC HAZARD

The native soils encountered in the borings were generally medium dense to very dense. The overall soil profile corresponds to a Site Class *D* as defined by Table 1613.5.2 of the 2006 International Building Code (2006 IBC). A Site Class *D* applies to a profile consisting of medium dense to very dense soils within the upper 100 feet.

We referenced the U.S. Geological Survey (USGS) Earthquake Hazards Program Website to obtain values for S_S, S_1, F_a, and F_v. The USGS website includes the most updated published data on seismic conditions. The site specific seismic design parameters and adjusted maximum spectral response acceleration parameters are as follows:

PGA	(Peak Ground Acceleration, in percent of g)
31.39	(10% Probability of Exceedence in 50 years)
55.43	(2% Probability of Exceedence in 50 years)
S_S	121.30% of g
S_1	42.80% of g
F_A	1.015
F_V	1.572

Additional seismic considerations include liquefaction potential and amplification of ground motions by soft soil deposits. The liquefaction potential is highest for loose sand with a high groundwater table. The relatively dense soils interpreted to underlie the site are considered to have a low potential for liquefaction and amplification of ground motion.

4.0 CONCLUSIONS AND RECOMMENDATIONS

Based on the findings of this investigation and previous geotechnical experience in the project area, it is our opinion that the proposed addition may be supported on a shallow foundation system bearing on the medium dense to very dense native soils, or on properly compacted structural fill placed on the medium dense to very dense native soils. We expect bearing soils to exist at or just below typical footing embedment depths following removal of the existing asphalt and any fill materials, generally 1 to 2 feet below the existing site grades. Bearing soils may exist at greater depth in areas where deep utilities are present in the addition area and local overexcavation of loose materials and/or undocumented fill may be necessary.

Groundwater was encountered in one of our borings and stormwater infiltration may be limited due to the relatively shallow depth of groundwater at the site. The site soils generally consist of poorly graded sand with gravel and are typically well suited for infiltration; however, the shallow depth to groundwater would limit the depth of any system to approximately 3 feet below existing grades. We can provide additional stormwater recommendations upon request.

4.1 EARTHWORK

We anticipate that earthwork activities for the project will include clearing and grubbing where the addition is proposed, cuts and/or fills on the order of 2 feet or less, utility placement to variable depths, and subgrade preparation for new asphalt paved parking areas.

4.1.1 Site Preparation

General site clearing for the addition should include removal of vegetation; trees and associated root systems; wood; existing utilities; any existing structures including foundations, basement walls and floors. Site stripping should extend to a minimum depth of 4 to 8 inches (preliminarily; based on our borings and site observations), or until all organics in excess of 3 percent by volume are removed. These materials will not be suitable for use as structural fill. However, stripped topsoil may be stockpiled and reused in landscape or non-structural areas.

After stripping operations and removal of any loose soils or undocumented fill that may impact the development of the site, the building pad areas should be visually inspected to identify any loose areas. Any remaining loose soils should be overexcavated to the level of the medium dense to very dense native soils. The resulting excavations should be filled with approved on site material, or imported structural fill. Structural fill material should be within ± 2 percent of the optimum moisture content, and the soils should be compacted to a minimum of 95 percent of the maximum dry density based on ASTM Test Method D1557.

During wet weather conditions, which typically occur from October through May, subgrade stability problems and grading difficulties may develop due to excess moisture, disturbance of sensitive soils and/or the presence of perched groundwater. Construction during the extended wet weather periods will likely create the need to overexcavate exposed soils as they become disturbed and cannot be recompacted due to elevated moisture contents. **The on site soils have low to moderate silt contents that could result in moisture sensitivity for these materials. If earthwork occurs during the months of October through May, additional overexcavation may be necessary to achieve proper bearing surfaces for pavements and foundations.**

If overexcavation is necessary, it should be confirmed through monitoring and testing by a qualified geotechnical engineer or senior geologist. Soils that have become unstable may require drying and recompaction. Selective drying may be accomplished by scarifying or windrowing surficial material during extended periods of dry, warm weather (typically during the summer). If the soils cannot be dried back to a workable moisture condition, remedial measures may be required. General project site protection during wet weather should include the placement of aggregate base and the protection of exposed soils during the construction phase.

4.1.2 Reuse of On Site Native Soils

If the native soils are used as structural fill, we recommend that the soils are relatively free of organic material and debris, and that the materials are within ± 2 percent of the optimum moisture content. Aeration and drying of the native soils may be necessary to achieve near optimum moisture conditions.

If the native soils are stockpiled for later use as structural fill, the stockpiles should be covered to protect the soil from wet weather conditions. We recommend that a representative of Kane Environmental & Associates be on site during the excavation work to determine which soils are suitable for structural fill.

4.1.3 Imported Structural Fill

Imported structural fill material should consist of well-graded gravel or a sand and gravel mixture with a maximum grain size of 3 inches and less than 5 percent fines (material passing the U.S. Standard No. 200 Sieve). All structural fill material should be submitted for approval to the geotechnical engineer at least 48 hours prior to delivery to the site.

4.1.4 Fill Placement and Compaction Criteria

Fill soils should be placed in horizontal lifts not exceeding 10 inches loose thickness, moisture-conditioned as necessary, (moisture content of soil shall not vary by more than ±2 percent of optimum moisture) and the material should be compacted to at least 95 percent of the maximum dry density based on ASTM Test Method D1557. In place density tests should be performed on all structural fill to verify proper moisture content and adequate compaction. Additional lifts should not be placed if the previous lift did not meet the compaction requirements or if soil conditions are not considered stable. Observations of fill materials could indicate excessively wet, pumping soils which would warrant non-passing evaluation, even if the minimum compaction requirement is met.

4.1.5 Temporary Excavations

Based on our understanding of the project, we anticipate that the grading will be limited with cuts on the order of approximately 2 feet or less. However, if there are temporary cuts that will extend deeper than 4 feet, the temporary excavations should be sloped no steeper than 1H:1V (Horizontal:Vertical) in medium dense to dense native soils and 3/4H:1V (Horizontal:Vertical) in very dense native soils if encountered in deeper excavations, where room permits. If the excavation is subject to heavy vibration or surcharge loads, we recommend they be sloped no steeper than 1.5H:1V, where room permits. Temporary excavations in fill soils should be sloped no steeper than 1.5H:1V where room permits, and 2H:1V if subject to heavy vibration or surcharge loads.

All temporary cuts should be in accordance with the Washington Administrative Code (WAC) Part N, Excavation, Trenching, and Shoring. The temporary slopes should be visually inspected daily by a qualified person during construction work activities and the inspections should be documented in daily reports. The contractor is responsible for maintaining the stability of the temporary cut slopes and reducing slope erosion during construction.

The temporary cut slopes should be covered with visqueen to help minimize erosion during wet weather, and the slopes should be closely monitored until the permanent retaining systems or slope configurations are complete. Materials should not be stored or equipment operated within 10 feet of the top of any temporary cut slope.

All soil conditions may not be fully delineated during the geotechnical investigation. In the case of temporary cuts, the existing soil conditions may not be completely revealed until the excavation work exposes the soil. Typically, as excavation work progresses the maximum inclination of the temporary slopes will need to be re-evaluated by the geotechnical engineer so that supplemental recommendations can be made. Soil and groundwater conditions can be highly variable. Scheduling for soil work will need to be adjustable, to deal with unanticipated conditions, so that the project can proceed and required deadlines can be met.

If any variations or undesirable conditions are encountered during construction Kane Environmental should be notified so that supplemental recommendations can be made. If room constraints or groundwater conditions do not permit temporary slopes to be cut to the maximum angles allowed by the WAC, temporary shoring systems may be required. The contractor should be responsible for developing temporary shoring systems, if needed. We recommend that Kane Environmental, Inc. and the project structural engineer review temporary shoring designs prior to installation, to verify the suitability of the proposed systems.

4.1.6 Utility Trenches

Utility trenches should be excavated according to accepted engineering practices following OSHA (Occupational Safety and Health Administration) standards, by a contractor experienced in such work. The contractor is responsible for the safety of open trenches. Traffic and vibration adjacent to trench walls should be reduced; cyclic wetting and drying of excavation side slopes should be avoided. Depending upon the location and depth of some utility trenches, groundwater flow into open excavations could be experienced, especially during or shortly following periods of precipitation.

Sandy soils were encountered at shallow depths in the borings at this site. These soils have low cohesion and can have a tendency to cave in excavations. Although dense and very dense native soils, which generally have some cohesive strength, were encountered below the overlying medium dense materials, bedding and joint (fracture) planes in these soils may still cause caving in trench walls. Shoring or sloping back trench sidewalls may be required within these soils.

All utility trench backfill should consist of imported structural fill or suitable on-site material. Utility trench backfill placed in or adjacent to buildings and exterior slabs should be compacted to at least 95 percent of the maximum dry density based on ASTM Test Method D1557. The upper 5 feet of utility trench backfill placed in pavement areas should be compacted to at least 95 percent of the maximum dry density based on ASTM Test Method D1557. Below 5 feet, utility trench backfill in pavement areas should be compacted to at least 90 percent of the maximum dry density based on ASTM Test Method D1557. Pipe bedding should be in accordance with the pipe manufacturer's recommendations.

The contractor is responsible for removing all water-sensitive soils from the trenches regardless of the backfill location and compaction requirements. The contractor should use appropriate equipment and methods to avoid damage to the utilities and/or structures during fill placement and compaction.

4.1.7 Erosion and Sediment Control

Erosion and sediment control (ESC) measures are implemented to reduce the transportation of sediment to wetlands, streams, lakes, drainage systems, and adjacent properties. Erosion and sediment control measures should be installed and these measures should be in general accordance with local regulations. At a minimum, the following basic recommendations should be incorporated into the design of the erosion and sediment control features of the site:

1) Phase the soil, foundation, utility, and other work, requiring excavation or the disturbance of the site soils, to take place during the dry season (generally May through September). However, provided precautions are taken using Best Management Practices (BMP's), grading activities can be undertaken during the wet season (generally October through April). It should be noted that this typically increases the overall project cost.

2) All site work should be completed and stabilized as quickly as possible.

3) Additional perimeter erosion and sediment control features may be required to reduce the possibility of sediment entering the surface water. This may include additional silt fences, silt fences with a higher Apparent Opening Size (AOS), construction of a berm, or other filtration systems.

4) Any runoff generated by dewatering discharge should be treated through construction of a sediment trap if there is sufficient space. If space is limited other filtration methods will need to be incorporated.

4.1.8 Groundwater Influence on Construction

Groundwater was encountered in B-2 at 3 feet below the existing site grades at the time of the drilling operations. Groundwater was not encountered in B-1 or B-3 at the date and time of our exploration work. We anticipate that this groundwater is related to stormwater and/or septic systems located within the property and is localized in the north central portion of the property.

If groundwater is encountered during construction, we should observe the conditions to determine if dewatering will be needed. Design of temporary dewatering systems to remove groundwater should be the responsibility of the contractor.

If earthwork is performed during or soon after periods of precipitation, the subgrade soils may become saturated. These soils may "pump," and the materials may not respond to densification techniques. Typical remedial measures include: discing and aerating the soil during dry, warm weather; mixing the soil with drier materials; removing and replacing the soil with an approved fill material. A qualified geotechnical engineering firm should be consulted prior to implementing remedial measures to observe the unstable subgrade conditions and provide appropriate recommendations.

4.2 FOUNDATIONS

We recommend that the proposed addition be supported on a shallow spread footing system founded on undisturbed medium dense to very dense native soils or on properly compacted structural fill placed on the medium dense to very dense native soils. If structural fill is used to support foundations, then the zone of structural fill should extend beyond the faces of the footing a distance at least equal to the thickness of the structural fill. Kane Environmental should observe the subgrade conditions prior to placing any fill or concrete to verify that any unsuitable materials have been removed.

4.2.1 Foundation Design

For shallow foundation support, we recommend widths of at least 18 and 24 inches, respectively, for continuous wall and isolated column footings supporting the proposed additions. Provided that the footings are supported as recommended above, a net allowable bearing pressure of 3,000 pounds per square foot (psf) may be used for design.

A 1/3 increase in the above value may be used for short duration loads, such as those imposed by wind and seismic events. Structural fill placed on bearing, native subgrade should be compacted to at least 95 percent of the maximum dry density based on ASTM Test Method D1557. Footing excavations should be inspected to verify that the foundations will bear on suitable material.

Exterior footings should have a minimum depth of 18 inches below pad subgrade (soil grade) or adjacent exterior grade, whichever is lower. Interior footings should have a minimum depth of 12 inches below pad subgrade (soil grade) or adjacent exterior grade, whichever is lower.

4.2.2 Foundation Settlement

If constructed as recommended, the total foundation settlement is not expected to exceed 1 inch. Differential settlement, along a 25-foot exterior wall footing, or between adjoining column footings, should be less than ½ inch. This translates to an angular distortion of 0.002. Most settlement is expected to occur during construction, as the loads are applied. However, additional post-construction settlement may occur if the foundation soils are flooded or saturated.

4.2.3 Lateral Resistance

Resistance to lateral footing displacement can be determined using an allowable friction factor of 0.32 acting between the bases of foundations and the supporting subgrade. Lateral resistance for footings can also be developed using an allowable equivalent fluid passive pressure of 275 pounds per cubic foot (pcf) acting against the appropriate vertical footing faces (neglect the upper 12 inches below grade in exterior areas). The allowable friction factor and allowable equivalent fluid passive pressure values include a factor of safety of 1.5. The frictional and passive resistance of the soil may be combined without reduction in determining the total lateral resistance. A 1/3 increase in the above values may be used for short duration transient loads.

4.2.4 Footing Drainage

We recommend that seasonal rainfall, run-off, and the normal practice of watering trees and landscaping areas around the proposed addition, should not be permitted to flood and/or saturate footings. To prevent the buildup of water within the footing areas, continuous footing drains (with cleanouts) should be provided at the bases of the footings. The footing drains should consist of a minimum 4-inch diameter perforated pipe, sloped to drain, with perforations placed down and enveloped by 1-inch sized washed rock in all directions and filter fabric to prevent the migration of fines.

4.3 BELOW GRADE WALLS AND RETAINING WALLS

We have developed criteria for the design of retaining or below grade walls, in case this information is required. Our design parameters are based on retention of backfill soils. The parameters are also based on a level backfill condition. Walls may be designed as "restrained" retaining walls based on "at-rest" earth pressures, plus any surcharge on top of the walls as described below, if the walls are attached to the buildings and/or movement is not acceptable. Unrestrained walls may be designed based on "active" earth pressure, if the walls are not part of the buildings and some movement of the retaining walls is acceptable. Acceptable lateral movement equal to at least 0.2 percent of the wall height would warrant the use of "active" earth pressure values for design.

4.3.1 Design Parameters

The following table, titled **Wall Design Criteria**, presents the recommended soil related design parameters for retaining walls with **level (horizontal) backfill/backslope**. Contact Kane Environmental, Inc. if an alternate retaining wall configuration is used.

Wall Design Criteria	
"At-rest" Conditions (Lateral Earth Pressure – EFD^{+})	55 pcf (Equivalent Fluid Density)
"Active" Conditions (Lateral Earth Pressure – EFD^{+})	35 pcf (Equivalent Fluid Density)
Seismic Increase for "At-rest" Conditions (Lateral Earth Pressure)	14H* (Uniform Distribution)
Seismic Increase for "Active" Conditions (Lateral Earth Pressure)	6H* (Uniform Distribution)
Passive Earth Pressure on Low Side of Wall (Allowable, includes F.S. = 1.5)	Neglect upper 12 inches, then 275 pcf EFD^{+}
Soil-Footing Coefficient of Sliding Friction (Allowable; includes F.S. = 1.5)	0.32

*H is the height of the wall; Increase based on one in 2,500 year seismic event (2 percent probability of being exceeded in 50 years).

+ EFD – Equivalent Fluid Density

The stated lateral earth pressures do not include the effects of hydrostatic pressure generated by water accumulation behind the retaining walls or loads imposed by construction equipment, foundations, earth backslope, rockeries above or roadways (surcharge loads).

4.3.2 Wall Drainage

To reduce the lateral earth pressure that could result from a buildup of water pressure against the walls, continuous footing drains (with cleanouts) should be provided at the bases of the walls. The footing drains should consist of a minimum 4-inch diameter perforated pipe, sloped to drain, with perforations placed down and enveloped by a minimum 6 inches of pea gravel in all directions and filter fabric to prevent the migration of fines.

The backfill adjacent to and extending a lateral distance, behind the walls, of at least 2 feet should consist of free-draining granular material. All free draining backfill should contain less than 3 percent fines (passing the U.S. Standard No. 200 Sieve) based upon the fraction passing the U.S. Standard No. 4 Sieve with at least 30 percent of the material being retained on the U.S. Standard No. 4 Sieve. It should be realized that the primary purpose of the free-draining material is the reduction of hydrostatic pressure. Some potential for the moisture to contact the back face of the wall may exist, even with treatment, which may require that more extensive waterproofing be specified for walls, which require interior moisture sensitive finishes.

4.3.3 Wall Backfill and Compaction

We recommend that the backfill be compacted to at least 95 percent of the maximum dry density based on ASTM Test Method D1557. In place density tests should be performed to verify adequate compaction. Soil compactors place transient surcharges on the backfill. Consequently, only light hand operated equipment is recommended within 3 feet of walls so that excessive stress is not imposed on the walls.

4.4 SLAB ON GRADE FLOORS

We recommend that at least 1 to 2 feet of the existing subgrade be removed in loose soil areas underlying the building floor slab sections. The over-excavated areas should be compacted and backfilled to the planned floor slab subgrade level with structural fill. Note: The overexcavated floor slab subgrade area should be compacted and proof rolled prior to structural fill placement.

In structure areas where it is desired to reduce floor dampness, such as areas covered with moisture sensitive floor coverings, we recommend that concrete slab-on-grade floors be underlain by a water vapor retarder system. The water vapor retarder system should be installed in accordance with ASTM Specification E164-94 and Standard Specifications E1745-97. According to ASTM Guidelines, the water vapor retarder should consist of a vapor retarder sheeting underlain by a minimum of 4-inches of compacted clean (less than 5 percent passing the U.S. Standard No. 200 Sieve), open-graded coarse rock of ¾-inch maximum size. The vapor retarder sheeting should be protected from puncture damage. The exterior floor concrete should be placed separately in order to act independently of the walls and

foundation system. All fills required to bring the building pads to grade should consist of structural fill material.

Moisture within the structure may be derived from water vapors, which were transformed from the moisture within the soils. This moisture vapor can travel through the vapor membrane and penetrate the slab-on-grade. This moisture vapor penetration can affect floor coverings and produce mold and mildew in the structures.

To reduce moisture vapor intrusion, it is recommended that a vapor retarder be installed in accordance with ASTM guidelines. We recommended that the utility trenches within the structure be compacted as specified in our report, to reduce the transmission of moisture through the utility trench backfill. Positive drainage should be established away from the structure and should be maintained throughout the life of the structure. Ponding of water should not be allowed adjacent to the structure.

4.5 INFILTRATION

For preliminary infiltration design, we classified subsurface soils according to the United States Department of Agriculture Textural Triangle to determine suitable infiltration rates for the site soils. Our work was performed in general accordance with the guidelines in the Pierce County Stormwater Management and Site Development Manual.

The soil infiltration rates based on visual classification are presented in the following table.

INFILTRATION RATES BASED ON FIELD TESTING AND VERIFICATION THROUGH TEXTURAL ANALYSIS			
LOCATION	**TEST DEPTH (feet)**	**INFILTRATION RATE (min/inch) No Factor of Safety**	**USDA SOIL CLASSIFICATION Based on Visual Classification**
B-1	5	5	Medium Sand
B-3	5	5	Medium Sand

We encountered groundwater in Boring B-2 at 3 feet below the existing site grade in an area that appears to be an existing stormwater infiltration system. Infiltration of stormwater at the site appears to be feasible south and north of the existing fire station structure or possibly in areas east of the existing stormwater and/or septic systems. Additional exploration work and on site infiltration tests may be necessary to aid in the system design depending on the depth and location of the system.

At least two infiltration verification tests should be performed during or following the construction of any infiltration system. We recommend that the Pilot Infiltration Test (PIT) or single ring infiltrometer method be used to verify the infiltration rates for the project. Kane Environmental should review the final system design prior to construction. We can provide additional stormwater recommendations once a design has been finalized.

4.6 GENERAL SITE DRAINAGE

The ground surface should slope away from building pads and pavement areas, toward appropriate drop inlets or other surface drainage devices. We recommend that adjacent exterior grades be sloped a minimum of 2 percent for a minimum distance of 5 feet away from structures. Roof drains should be tightlined away from foundations. Subgrade soils in pavement areas should be sloped a minimum of 1 percent and drainage gradients maintained to carry all surface water to collection facilities and off-site. These grades should be maintained for the life of the project. The collection facilities should be tightlined away from slopes that exceed 30 percent.

4.7 PAVEMENTS

The near surface subgrade soils generally consist of silty sand with variable amounts of gravel to sand with gravel and variable amounts of silt. These soils are rated as good for pavement subgrade material. We estimate that the subgrade will have a California Bearing Ratio (CBR) value of 12 and a modulus of subgrade reaction value of k = 210 pci, provided the subgrade is prepared in general accordance with our recommendations.

We recommend that, at a minimum, 12 inches of the existing subgrade material be moisture conditioned (as necessary) and re-compacted to prepare for the construction of pavement sections. The subgrade should be compacted to at least 95 percent of the maximum dry density as determined by ASTM Test Method D1557. In place density tests should be performed to verify proper moisture content and adequate compaction. However, if the subgrade soil consists of firm and unyielding native glacial soils a proof roll of the pavement subgrade soil may be performed in lieu of re-compacting the subgrade and compaction tests. The recommended flexible and rigid pavement sections are based on design CBR and modulus of subgrade reaction (k) values that are achieved, only following proper subgrade preparation. It should be noted that subgrade soils that have relatively high silt contents may be highly sensitive to moisture conditions. The subgrade strength and performance characteristics of a silty subgrade material may be dramatically reduced if this material becomes wet.

Traffic loads were not provided, however, based on our knowledge of the proposed project, we expect the traffic to range from light duty (passenger automobiles) to heavy duty (fire trucks). The following tables show the recommended pavement sections for light duty and heavy duty use.

ASPHALTIC CONCRETE (FLEXIBLE) PAVEMENT

LIGHT DUTY

Asphaltic Concrete	Aggregate Base*	Compacted Subgrade* **
2.0 in.	6.0 in.	12.0 in.

** 95% compaction based on ASTM Test Method D1557*
*** A proof roll may be performed in lieu of in place density tests*

HEAVY DUTY

Asphaltic Concrete	Aggregate Base*	Compacted Subgrade* **
4.0 in.	6.0 in.	12.0 in.

** 95% compaction based on ASTM Test Method D1557*
*** A proof roll may be performed in lieu of in place density tests*

PORTLAND CEMENT CONCRETE (RIGID) PAVEMENT

Min. PCC Depth	Aggregate Base*	Compacted Subgrade* **
5.0 in.	6.0 in.	12.0 in.

** 95% compaction based on ASTM Test Method D1557*
*** A proof roll may be performed in lieu of in place density tests*

The asphaltic concrete depth in the flexible pavement tables should be a surface course type asphalt, such as Washington Department of Transportation (WSDOT) ½ inch HMA. The rigid pavement design is based on a Portland Cement Concrete (PCC) mix that has a 28 day compressive strength of 4,000 pounds per square inch (psi). The design is also based on a concrete flexural strength or modulus of rupture of 550 psi.

4.8 Testing and Inspection

A representative of Kane Environmental, Inc. should be present at the site during the earthwork activities to confirm that actual subsurface conditions are consistent with the fieldwork. This activity is an integral part of our services as acceptance of earthwork construction is dependent upon observation and testing processes of grading and excavation activities. This representative can also verify that the intent of these recommendations is incorporated into the project design and construction. Kane Environmental, Inc. will not be responsible for grades or staking, since this is the responsibility of the Prime Contractor. Furthermore, Kane Environmental, Inc. is not responsible for the contractor's procedures, methods, scheduling or management of the work site.

5.0 LIMITATIONS

Geotechnical engineering is one of the newest divisions of Civil Engineering. This branch of Civil Engineering is constantly improving as new technologies and understanding of earth sciences improves. Although your site was analyzed using the most appropriate current techniques and methods, undoubtedly there will be substantial future improvements in this branch of engineering. In addition to improvements in the field of geotechnical engineering, physical changes in the site either due to excavation or fill placement, new agency regulations or possible changes in the proposed structure after the time of completion of the soils report may require the soils report to be professionally reviewed. In light of this, the owner should be aware that there is a practical limit to the usefulness of this report without critical review. Although the time limit for this review is strictly arbitrary, it is suggested that two years be considered a reasonable time for the usefulness of this report.

Foundation and earthwork construction is characterized by the presence of a calculated risk that soil and groundwater conditions have been fully revealed by the original foundation investigation. This risk is derived from the practical necessity of basing interpretations and design conclusions on limited sampling of the earth. Our report, design conclusions and interpretations should not be construed as a warranty of the subsurface conditions. Actual subsurface conditions may differ, sometimes significantly, from those indicated in this report. The recommendations made in this report are based on the assumption that soil conditions do not vary significantly from those disclosed during our field investigation. The findings and conclusions of this report can be affected by the passage of time, such as seasonal weather conditions, manmade influences, such as construction on or adjacent to the site, natural events such as earthquakes, slope instability, flooding, or groundwater fluctuations. If any variations or undesirable conditions are encountered during construction, the geotechnical engineer should be notified so that supplemental recommendations can be made.

The conclusions of this report are based on the information provided regarding the proposed construction. If the proposed construction is relocated or redesigned, the conclusions in this report may not be valid. The geotechnical engineer should be notified of any changes so that the recommendations can be reviewed and reevaluated.

Misinterpretations of this report by other design team members can result in project delays and cost overruns. These risks can be reduced by having Kane Environmental, Inc. involved with the design teams meetings and discussions after submitting the report. Kane Environmental, Inc. should also be retained for reviewing pertinent elements of the design team's plans and specifications. Contractors can also misinterpret this report. To reduce this, risk Kane Environmental, Inc. should participate in pre-bid and preconstruction meetings, and provide construction observations during the site work.

This report is a geotechnical engineering investigation with the purpose of evaluating the soil conditions in terms of foundation design. The scope of our services did not include any environmental site assessment for the presence or absence of hazardous and/or toxic materials in the soil, groundwater or atmosphere, or the presence of wetlands. Any statements, or absence of statements, in this report or on any boring log regarding odors, unusual or suspicious items, or conditions observed are strictly for descriptive purposes and are not intended to convey engineering judgment regarding potential hazardous and/or toxic assessments.

The geotechnical information presented herein is based upon professional interpretation utilizing standard engineering practices and a degree of conservatism deemed proper for this project. It is not warranted that such information and interpretation cannot be superseded by future geotechnical developments. We emphasize that this report is valid for this project as outlined above, and should not be used for any other site. Our report is prepared for the exclusive use of our client. No other party may rely on the product of our services unless we agree in advance to such reliance in writing.

If you have any questions, or if we may be of further assistance, please do not hesitate to contact our office at (206) 691-0476.

6.0 REFERENCES

U.S. Department of Agriculture, Soil Conservation Service, "Soil Survey of Pierce County"

Washington State Department of Transportation (WSDOT), "Standard Specifications for Road, Bridge and Municipal Construction"

International Code Council, "International Building Code", 2006

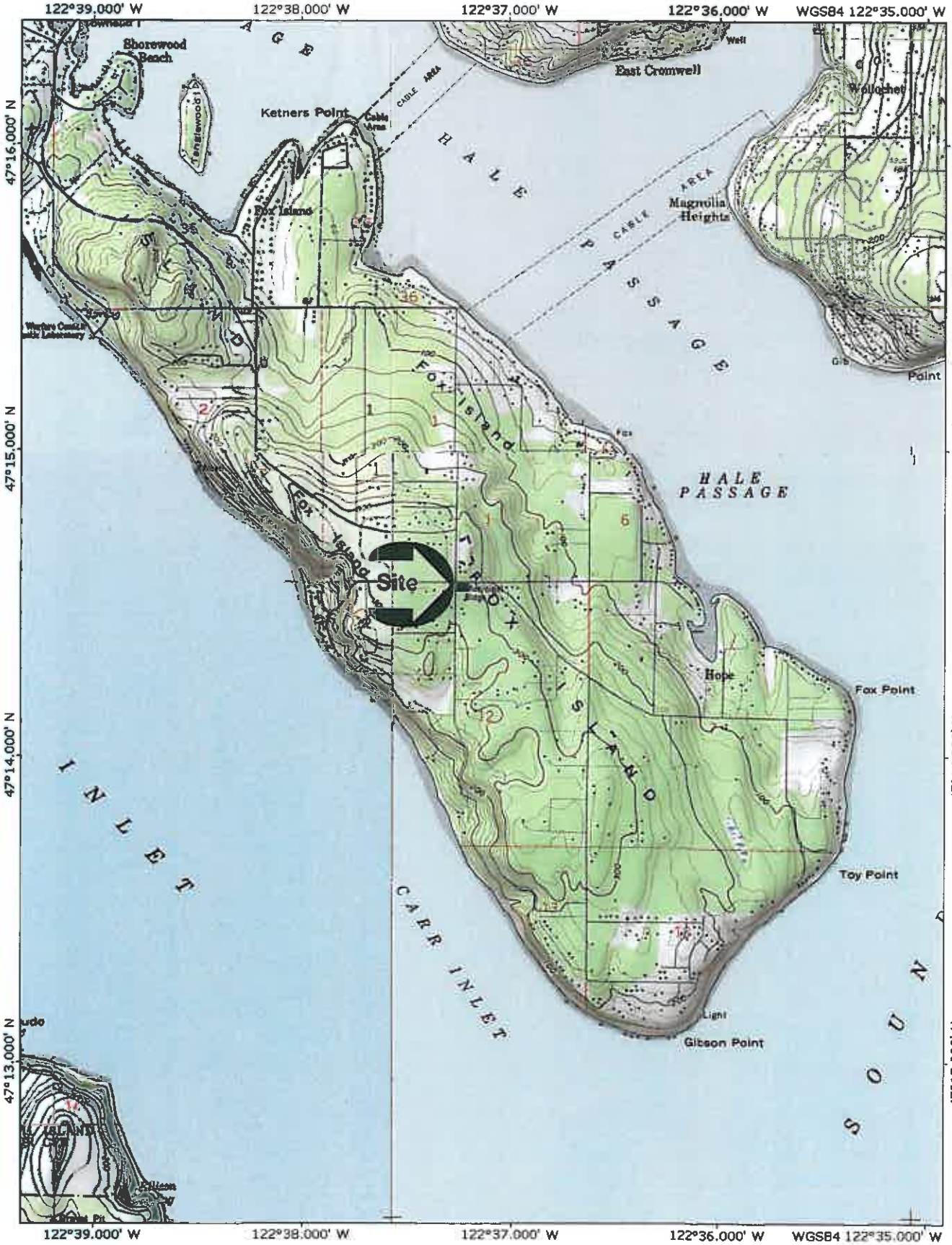

Map created with TOPO!® ©2003 National Geographic (www.nationalgeographic.com/topo)

KANE ENVIRONMENTAL INC

Proposed Fire Station 5-3 Addition
Fox Island, Washington

4/12/10	By: PH	Source: Topo 2003;

Figure 1
Vicinity Map

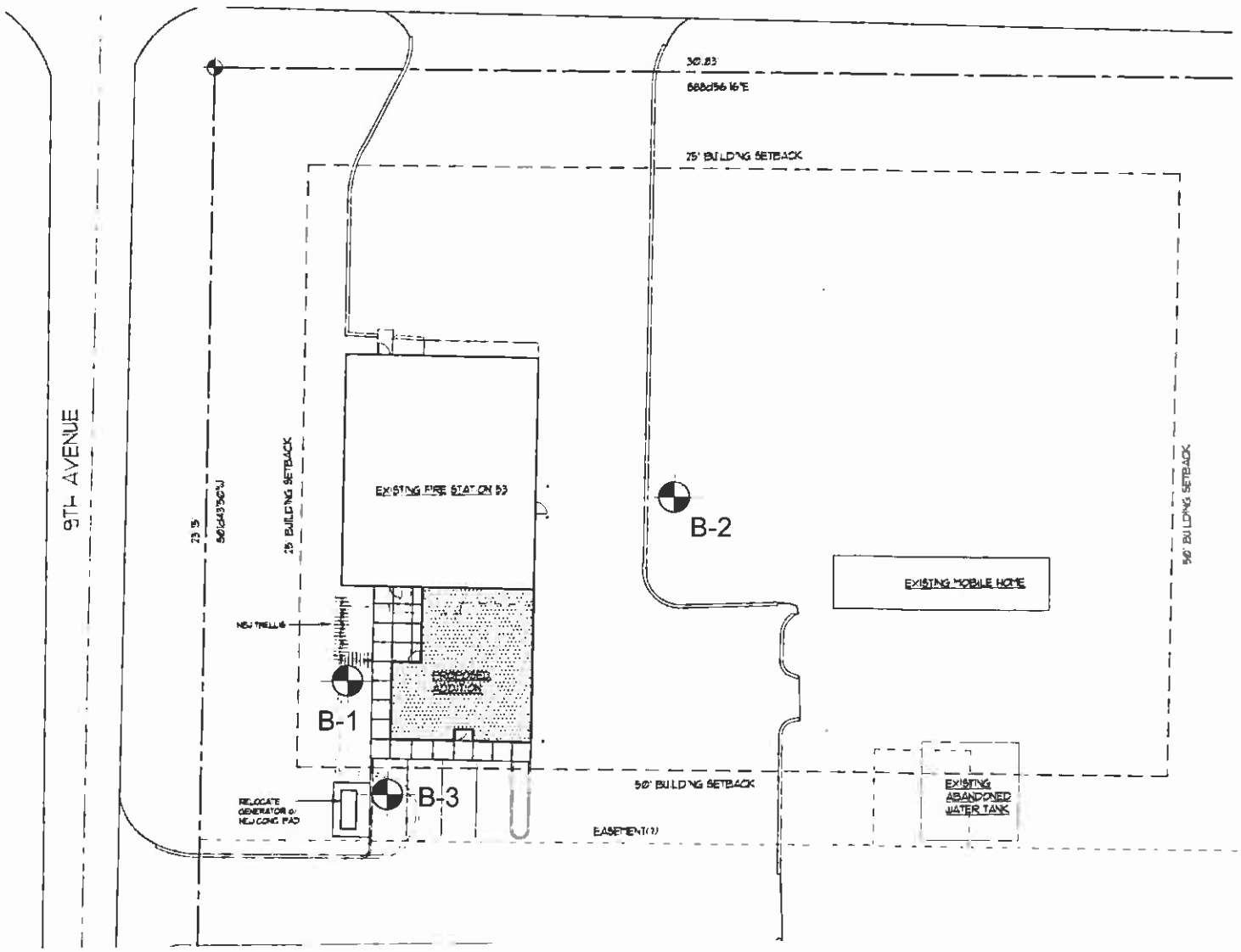

N

LEGEND

B-1 Approximate Boring Location

Not to Scale

KANE ENVIRONMENTAL INC	Fire Station 5-3 - Proposed Addition Fox Island, Washington			Figure 2 Site Plan
	4/7/10	By: PH	Source: RFM Site Plan 3/10/10	

Appendix A

Boring Logs

APPENDIX A

FIELD INVESTIGATION

Field Investigation

The field investigation consisted of drilling and sampling three (3) exploratory borings that generally covered the proposed site to be developed was completed to evaluate the shallow subsurface soil and groundwater conditions. The exploratory borings reached depths of approximately 6.5 to 9 feet below the existing site grades.

The approximate exploratory boring locations are shown on the site plan (Figure 2). The depths shown on the attached boring logs are from the existing ground surface at the time the borings were drilled.

The soils encountered were logged in the field during the exploration and, with supplementary laboratory test data, are described in accordance with the Unified Soil Classification System (USCS).

The drilled exploratory borings were advanced using a limited access drill rig. Disturbed soil samples were obtained by using the Standard Penetration Test (SPT) as described in ASTM:D-1586. The Standard Penetration Test and sampling method consists of driving a standard 2-inch outside-diameter, split barrel sampler into the subsoil with a 140-pound hammer free falling a vertical distance of 30 inches. The summation of hammer-blows required to drive the sampler the final 12-inches of an 18-inch sample interval is defined as the Standard Penetration Resistance, or N-value. The blow count is presented graphically on the boring logs in this appendix. The resistance, or "N" value, provides a measure of the relative density of granular soils or of the relative consistency of cohesive soils.

All samples were returned to our office for evaluation. The logs of the borings are presented in this appendix.

SOIL CLASSIFICATION CHART

MAJOR DIVISIONS			SYMBOLS GRAPHIC	SYMBOLS LETTER	TYPICAL DESCRIPTIONS
COARSE GRAINED SOILS MORE THAN 50% RETAINED ON #200 SIEVE	GRAVEL AND GRAVELLY SOILS MORE THAN 50% OF COARSE FRACTION RETAINED ON #4 SIEVE	CLEAN GRAVELS <5% PASSING THE #200 SIEVE		GW	WELL-GRADED GRAVELS, GRAVEL-SAND MIXTURES
				GP	POORLY-GRADED GRAVELS, GRAVEL-SAND MIXTURES
		GRAVELS WITH FINES >12% PASSING THE #200 SIEVE		GM	SILTY GRAVELS, GRAVEL-SAND-SILT MIXTURES
				GC	CLAYEY GRAVELS, GRAVEL-SAND-CLAY MIXTURES
	SAND AND SANDY SOILS MORE THAN 50% OF COARSE FRACTION PASSING #4 SIEVE	CLEAN SANDS <5% PASSING THE #200 SIEVE		SW	WELL-GRADED SANDS, GRAVELLY SANDS
				SP	POORLY-GRADED SANDS, GRAVELLY SANDS
		SANDS WITH FINES >12% PASSING THE #200 SIEVE		SM	SILTY-SANDS, SAND-SILT MIXTURES
				SC	CLAYEY SANDS, SAND-CLAY MIXTURES
FINE GRAINED SOILS MORE THAN 50% PASSING #200 SIEVE	SILTS AND CLAYS LIQUID LIMIT <50	INORGANIC		ML	INORGANIC SILTS, ROCK FLOUR, CLAYEY SILTS WITH SLIGHT PLASTICITY
				CL	INORGANIC CLAYS OF LOW TO MEDIUM PLASTICITY, GRAVELLY CLAYS, SANDY CLAYS, SILTY CLAYS, LEAN CLAYS
		ORGANIC		OL	ORGANIC SILTS AND ORGANIC SILTY CLAYS OF LOW PLASTICITY
	SILTS AND CLAYS LIQUID LIMIT >50	INORGANIC		MH	INORGANIC SILTS, MICACEOUS OR DIATOMACEOUS SILTY SOILS
				CH	INORGANIC CLAYS OF HIGH PLASTICITY
		ORGANIC		OH	ORGANIC CLAYS AND SILTS OF MEDIUM TO HIGH PLASTICITY
HIGHLY ORGANIC SOILS				PT	PEAT, HUMMUS, SOILS WITH HIGH ORGANIC CONTENTS

OTHER SYMBOLS

FINAL GROUNDWATER LEVEL

INITIALLY OBSERVED GROUNDWATER LEVEL

	CR	CRUSHED ROCK, QUARRY SPALLS
	TS	TOPSOIL, FOREST DUFF, VEGETATION
	AC	ASPHALT CONCRETE
	CC	CEMENT CONCRETE

KANE ENVIRONMENTAL INC

Unified Soil Classification Chart & Other Exploration Log Symbols

Figure A2

Log of Boring B-1

Date: March 22, 2010	Depth: 9'	Initial Groundwater: N/A
Contractor: CN Drilling	Elevation: N/A	Sample Type: Split Spoon
Method: Hollow Stem Auger	Logged By: Phil Haberman	Final Groundwater: N/A

Depth (Feet)	Interval	Recovery (In.)	Blows/Ft. (N)	Graphic Log	Group Symbol	Material Description	Groundwater
		12				Grass and Topsoil	
			15		SP	Medium dense to very dense, fine to medium grained sand (with gravel), yellowish brown to grayish brown, moist. (Outwash)	
2		14	41				
4		12	46				
6		12	60				
8							
10						End of Boring 9 Feet	

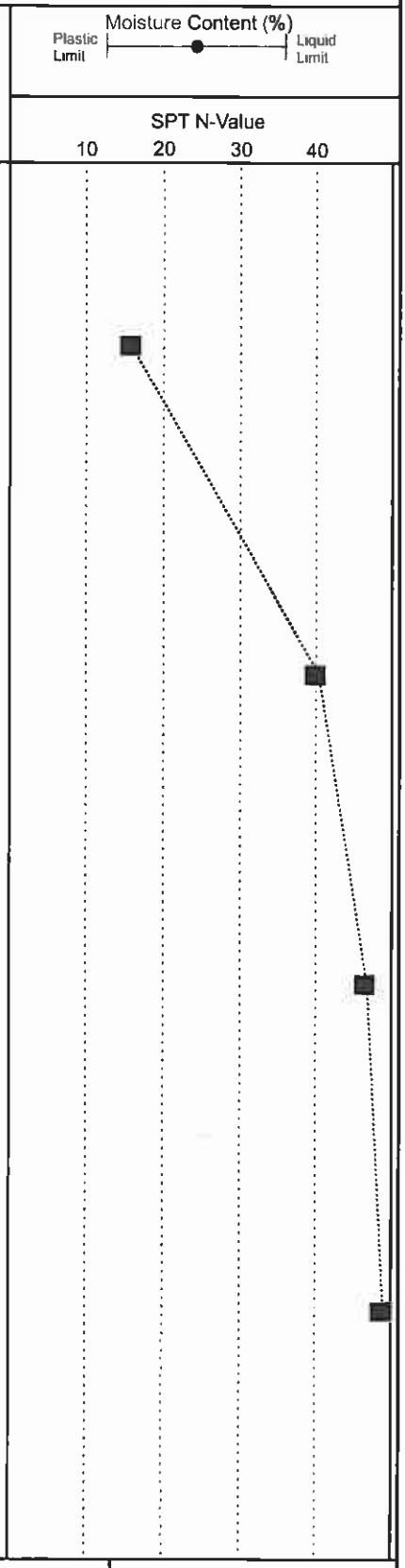

KANE ENVIRONMENTAL INC

Fire Station 5-3
Fox Island, Washington

Figure A3

Log of Boring B-2

Date: March 22, 2010	Depth: 9'	Initial Groundwater: 3'
Contractor: CN Drilling	Elevation: N/A	Sample Type: Split Spoon
Method: Hollow Stem Auger	Logged By: Phil Haberman	Final Groundwater: 3'

Depth (Feet)	Interval	Recovery (In.)	Blows/Ft. (N)	Graphic Log	Group Symbol	Material Description	Groundwater
		6				Grass and Topsoil	
			7		SM	Loose to medium dense, very fine to medium grained sand (with gravel), yellowish brown, moist to wet. (Fill)	
2		10					
			12		SP	Medium dense to very dense, fine to medium grained sand (with gravel), yellowish brown to grayish brown, moist to wet. (Outwash)	
4		8					
			40				
6		10					
8			55				
						End of Boring 9 Feet	
10							

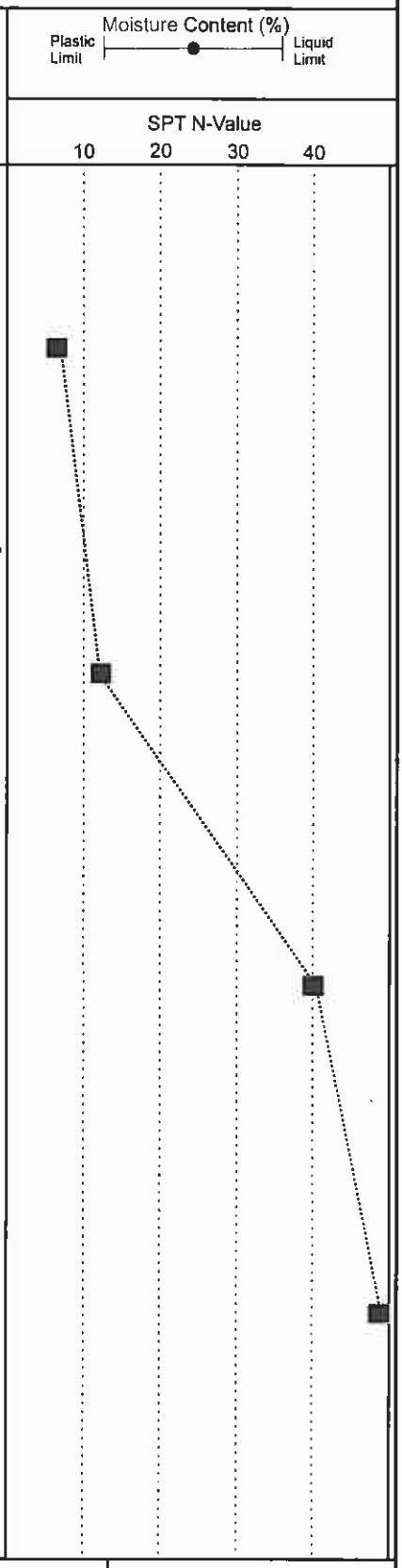

KANE ENVIRONMENTAL INC

Fire Station 5-3
Fox Island, Washington

Figure A4

Log of Boring B-3

Date: March 22, 2010	Depth: 6.5'	Initial Groundwater: N/A
Contractor: CN Drilling	Elevation: N/A	Sample Type: Split Spoon
Method: Hollow Stem Auger	Logged By: Phil Haberman	Final Groundwater: N/A

Depth (Feet)	Interval	Recovery (In.)	Blows/Ft. (N)	Graphic Log	Group Symbol	Material Description	Groundwater
		8				Grass and Topsoil	
			11		SP	Medium dense to very dense, fine to medium grained sand (with gravel), yellowish brown to grayish brown, moist. (Outwash)	
2		14	22				
4		16	45				
6							
						End of Boring 6.5 Feet	
8							
10							

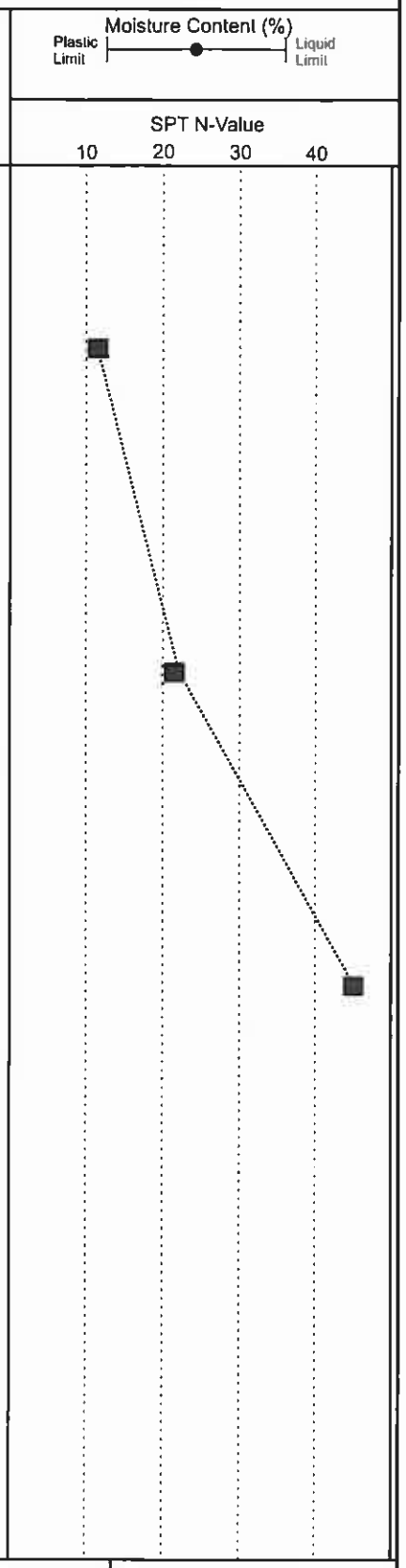

KANE ENVIRONMENTAL INC

Fire Station 5-3
Fox Island, Washington

Figure A5

Approved by
Steve Hupper for PPW
Development
Engineering
07/05/23

Construction Stormwater Pollution Prevention Plan

Gig Harbor Fire & Medic One Station 53
Gig Harbor, WA

June 22, 2023

PREPARED FOR:
Gig Harbor Fire & Medic One
Pierce County Fire District 5
Contact: John Johnson
Phone: (253) 851-3111

OWNER:
Gig Harbor Fire & Medic One
Pierce County Fire District 5
10222 Bujacich Rd NW
Gig Harbor, WA 98332

ARCHITECT:
Rice Fergus Miller
275 5th St, Ste. 100
Bremerton, WA 98337

MacKay Sposito
Project Number: 18016

Prepared by:
Eric Pilcher

This page intentionally left blank.

Construction Stormwater Pollution Prevention Plan (SWPPP)

FOR:
Gig Harbor Fire & Medic One Station 53

PREPARED FOR:
Gig Harbor Fire & Medic One
Pierce County Fire District 5
Contact: John Johnson
Phone: (253) 851-3111

OWNER:
Gig Harbor Fire & Medic One
Pierce County Fire District 5
10222 Bujacich Rd NW
Gig Harbor, WA 98332

PROJECT SITE LOCATION:
Section 12, Township 20 North, Range 01 East, Willamette Meridian,
Pierce County, Washington

EROSION AND SEDIMENT CONTROL INSPECTOR:
To Be Determined

SWPPP PREPARED BY:
Eric Pilcher, PE
MacKay Sposito
33810 Weyerhaeuser Way S, Ste. 130
Federal Way, WA 98001
(253) 205-8700

SWPPP PREPARATION DATE:
June 22, 2023

APPROXIMATE PROJECT CONSTRUCTION DATES:
December 2023 through November 2024

This page intentionally left blank.

Project Engineer's Certification:

"I hereby state that this Construction Stormwater Pollution Prevention Plan for Gig Harbor Fire & Medic One Station 53 has been prepared by me or under my supervision and meets the standard of care and expertise which is usual and customary in this community for professional engineers. I understand that Pierce County does not and will not assume liability for the sufficiency, suitability, or performance of Construction SWPPP BMPs prepared by me."

This page intentionally left blank.

Table of Contents

1.0 PROPOSED PROJECT DESCRIPTION 9
2.0 EXISTING CONDITIONS 9
Critical Areas 10
3.0 THIRTEEN ELEMENTS 13
Element #1: Preserve Vegetation/Mark Clearing Limits 13
Element #2: Establish Construction Access 13
Element #3: Control Flow Rates 13
Element #4: Install Sediment Controls 13
Element #5: Stabilize Soils 13
Element #6: Protect Slopes 14
Element #7: Protect Drain Inlets 15
Element #8: Stabilize Channels and Outlets 15
Element #9: Control Pollutants 15
Element #10: Control Dewatering 16
Element #11: Maintain BMPs 16
Element #12: Manage the Project 17
Element #13: Protect Low Impact Development BMPs 18
4.0 CONCLUSION 19
5.0 REFERENCES 19

List of Figures

Figure 1: Vicinity Map 11
Figure 2: Existing Conditions Plan 23
Figure 3: Soils Map 25
Figure 4: Clearing & Erosion Control Plan 27
Figure 5: Erosion Control Notes & Details 29

List of Appendices

Appendix A Figures 21

This page intentionally left blank.

1.0 PROPOSED PROJECT DESCRIPTION

The project is located on parcel number 0120121031, Section 12, Township 20 North, Range 01 East, Quarter 1, Willamette Meridian. The site address is 906 Kamus Drive, Fox Island, WA 98333. The site contains 1.61 acres of land. See Figure 1: Vicinity Map. A field survey was prepared by MacKay Sposito, Inc. in March 2023.

Proposed site improvements include 844 square feet of building additions, 1,846 square feet of asphalt concrete paving, and 325 square feet of miscellaneous concrete. Total new plus replaced hard surface area is 3,015 square feet, resulting in a net increase of 825 square feet of new hard surface over existing conditions. The total disturbed area is expected to be approximately 0.15 acres. New stormwater conveyance elements will be installed to collect and convey runoff from new roof areas. Earthwork activities associated with the proposed improvements are expected to require 25 cubic yards of excavated cut and 30 cubic yards of fill. Any surplus of excavated material will be removed from the site. The source of import material is not yet determined.

Under proposed conditions, the existing infiltration trench to the south of the fire station building will be preserved and protected. Runoff from new and existing roof areas, and new hard surface paving, will be routed to it.

2.0 EXISTING CONDITIONS

The site contains an existing 4,259 square foot fire station building, an existing 643 square foot out building, 16,130 square feet existing asphalt and concrete pavement, and 955 square feet of miscellaneous concrete. The total existing on-site hard surface area is 21,987 square feet, which accounts for 31.3 percent of the site. There are several existing trees on the site, primarily located within the eastern half of the property. The site also contains a septic drain field to the east of the building.

The site is bounded to the west by 9th Avenue and to the north by Kamus Drive. The Fox Island Historical Society abuts the property to the south. Otherwise, the site is surrounded by single-family residential homes.

The topography of the project site is generally flat with moderate downhill slopes existing just East of the site. Overall, water drains across the site from west to east. The majority of slopes on site do not exceed 5%. The high point within the site is approximately 317 feet and is located along the western project boundary. The low point within the site is approximately 302 feet and is located along the eastern project boundary on the north side of the driveway entrance.

Kane Environmental Inc. (Kane) performed subsurface field investigations on the project site and prepared a Geotechnical Report for the project in 2010. Cobalt Geosciences, LLC (Cobalt) reviewed the Kane report and prepared an amendment to the Geotechnical Report in 2023. The Kane Geotechnical Report as amended by Cobalt is submitted alongside this report. According to geotechnical investigations, soils within the project site are outwash and gravel fill with measured infiltration rates of 5 minutes per inch (12 inches per hour). Groundwater was encountered in one boring by Kane at 3 feet below grade, at an existing infiltration facility.

The site does not appear to receive offsite flows from any other parcel and there are no known drainage problems on or near the project site.

Critical Areas

A review of Pierce County GIS did not identify any critical areas that impact the site.

FILE: J:\18016 - GHFMO STATION 53\500 DESIGN\501 DOCUMENTS\REPORTS AND MEMOS\ABRV DRAINAGE REPORT\APP A FIGURES\CAD\FIG 1 - VICINITY MAP.DWG

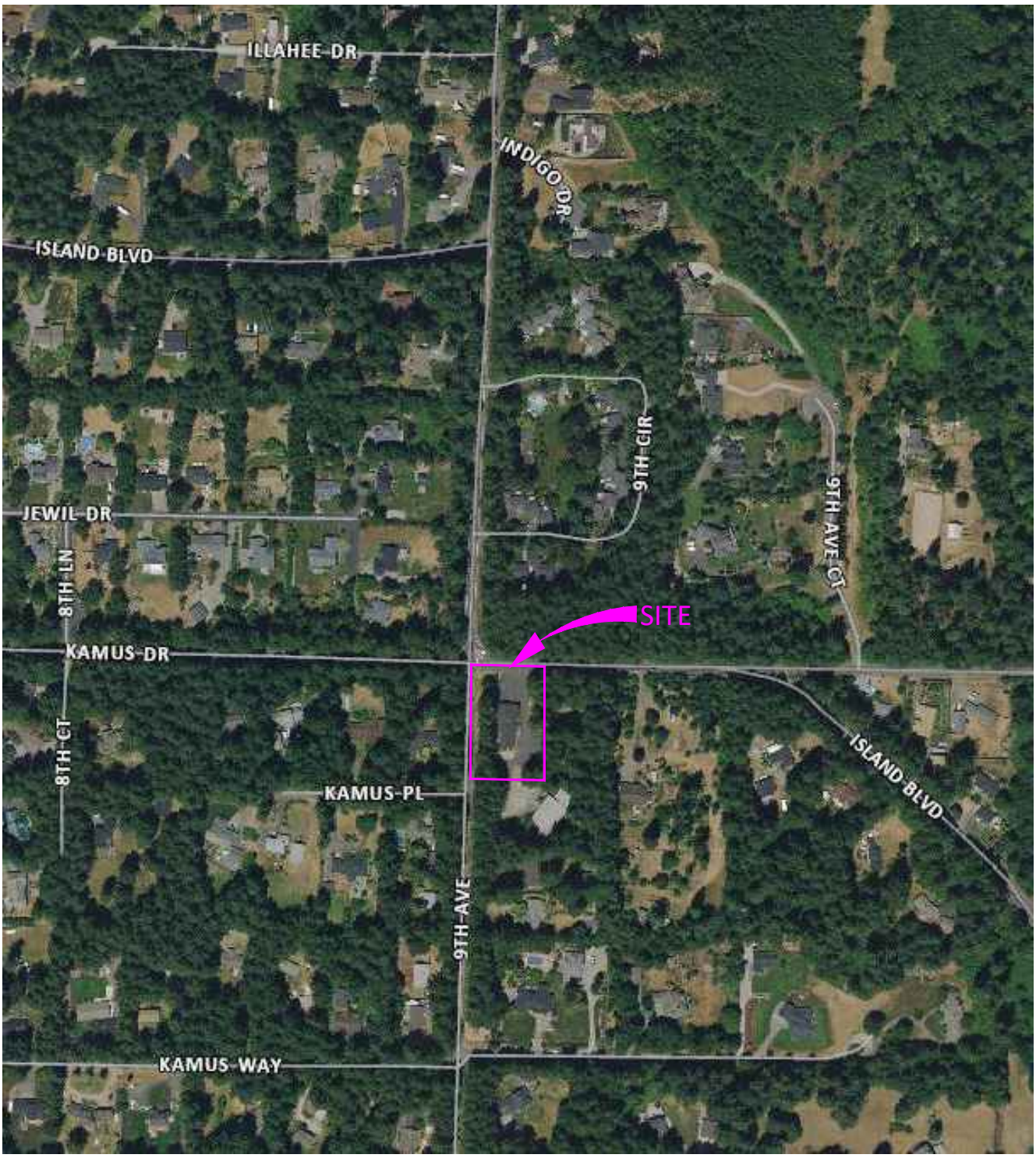

N

0 400 800

SCALE: 1" = 400'

MacKay Sposito

33810 WEYERHAEUSER WAY S, SUITE 130
FEDERAL WAY, WA 98001
PHONE (253) 205-8700
www.mackaysposito.com

STATION 53 ADDITION - GIG HARBOUR FIRE AND MEDIC ONE

VICINITY MAP

FIG. 1

This page intentionally left blank.

3.0 THIRTEEN ELEMENTS

The following are standard elements of the Construction SWPPP addressed as relevant to the work to be performed. More information on listed BMPs is available in Appendix B.

Element #1: Preserve Vegetation/Mark Clearing Limits

Natural vegetation outside of the limit of work shall remain protected during all construction (BMP C101). The limit of work shall be marked with a High Visibility Plastic Fence (BMP C103). A Silt Fence (BMP C233) shall be provided in areas of fill to reduce the possibility of sediment flowing offsite during construction. See Figure 4 and Figure 5 for TESC Plans and Details. High visibility silt fence may be used in place of high visibility fence, provided it meets the criteria for both purposes.

Best Management Practices (BMPs) to be deployed include:

- BMP C101: Preserving Natural Vegetation
- BMP C103: High Visibility Fence
- BMP C233: Silt Fence

Element #2: Establish Construction Access

The site will be accessed via the existing paved driveways on Crescent Valley Dr NW and Drummond Dr NW. No BMPs are anticipated to be necessary; rather, street sweepers will be used as needed to minimize tracking of sediment onto the adjacent roadways.

Element #3: Control Flow Rates

The disturbed area for this project is approximately 0.20 acres and the slopes within the project site are gentle, so runoff flow rates from the disturbed areas are anticipated to be minimal. Silt Fence (BMP C233) shall be provided in areas of fill to reduce the possibility of sediment flowing offsite during construction. Wattles (BMP C235) may also be used.

BMPs to be deployed include:

- BMP C233: Silt Fence
- BMP C235: Wattles

Element #4: Install Sediment Controls

Sediment control will be provided by protecting the clearing limits in areas of fill with Silt Fences (BMP C233) to limit the flow of sediment into the surrounding areas. Wattles (BMP C235) may also be used.

BMPs to be deployed include:

- BMP C233: Silt Fence
- BMP C235: Wattles

Element #5: Stabilize Soils

Exposed soils shall be stabilized by hydroseeding and/or plastic covering in areas where soil is stockpiled, left uncompacted, or left unworked on for a specific number of days depending on the time of year (see below). Soil stabilization measures shall be appropriate for the time of year, site conditions, estimated duration of use, and potential impacts that stabilization agents may have on downstream water and/or groundwater quality. Soil stockpiles shall be stabilized from erosion, protected with

sediment trap measures, and when possible, be located away from storm drain inlets, waterways and drainage channels.

Contractors shall install the bedding materials, roadbeds, structures, pipelines or utilities and re-stabilize the disturbed soils so that:

- From October 1 through April 30, no soils shall remain exposed and unworked for more than 2 days.
- From May 1 through September 30, no soils shall remain exposed and unworked for more than 7 days.

The condition applies to all soils on site, whether at final grade or not. If the site is left unworked for more than the days and times shown above, then Plastic Covering (BMP C123) will be used to cover exposed soils. Soils shall be stabilized at the end of the shift before a holiday or weekend if needed based on the weather forecast. The contractor is responsible for identifying when this may occur and implementing the proper techniques.

Permanent erosion control is not fully established until pavement or asphalt, quarry spalls used as ditch lining, application of thick layers of gravel or mulch, or vegetative cover is in place in a manner that will fully prevent soil erosion. Fully established erosion prevention requires approximately 90% of the site to be covered in one or more of the above-mentioned remedies. All temporary control measures shall remain in place until permanent measures are established.

BMPs to be deployed include:

- BMP C120: Temporary and Permanent Seeding
- BMP C121: Mulching
- BMP C123: Plastic Covering
- BMP C125: Topsoiling/Composting
- BMP C130: Surface Roughening
- BMP C140: Dust Control

Element #6: Protect Slopes

The site is mostly flat with gentle to moderate slopes. All slopes are designed at 4H:1V slopes or flatter. Velocities produced from slopes will be minimal.

Excavated material shall be placed on the uphill side of trenches, consistent with safety and space considerations. Check dams shall be placed at regular intervals within channels that are cut down a slope, and rock linings will be employed as necessary.

Suggested BMPs:

- BMP C120: Temporary and Permanent Seeding
- BMP C121: Mulching
- BMP C123: Plastic Covering
- BMP C130: Surface Roughening

Element #7: Protect Drain Inlets

All existing storm drain inlets to remain within and immediately downstream of the construction area and new storm drain inlets made operable during construction shall be protected using Storm Drain Inlet Protection (BMP C220) so that stormwater runoff does not enter the conveyance system without first being filtered or treated to remove sediment. Inlets shall be inspected weekly at a minimum and daily during storm events. Inlet protection devices shall be cleaned or removed and replaced when sediment has filled one-third of the available storage (may vary based on manufacturer).

All approach roads shall be kept clean using construction entrances (see Element #2). If the construction entrance is not providing adequate sediment removal, a wheel wash shall be implemented. This shall be determined by the contractor in coordination with the developer and engineer.

BMPs to be deployed include:

- BMP C220: Storm Drain Inlet Protection

Element #8: Stabilize Channels and Outlets

No direct discharges to swales are planned, and therefore no BMPs are believed to be necessary. However, downstream discharge points shall be monitored after heavy rain events and additional BMPs shall be deployed if deemed necessary by the contractor, engineer, or owner.

Element #9: Control Pollutants

All pollutants, including waste material and demolition debris, that occur onsite shall be handled and disposed of in a manner that does not cause contamination of stormwater. Woody debris may be chopped and spread on site. The project site does not propose the use of any chemicals, liquid products, petroleum products, or any other materials that have the potential to pose a threat to human health or the environment. There are no onsite fueling tanks within the project area. Additionally, the project site does not propose any application of agricultural chemicals, including fertilizer and/or pesticides.

The project does not propose any maintenance and repair of heavy equipment and vehicles involving oil changes, hydraulic system drain down, solvent and de-greasing cleaning operation, fuel tank drain down and removal, and/or any other activities which may result in discharge or spillage of pollutants to the ground or into stormwater runoff. Emergency repairs may be performed on site using temporary plastic placed beneath and, if raining, over the vehicle.

Wheel wash or tire bath wastewater shall be discharged to a separate onsite treatment system or to the sanitary sewer. The site does not propose the use of a wheel wash unless the contractor finds it necessary. If a wheel wash is installed, coordination with Pierce County Environmental Services shall be required prior to installation.

BMPs shall be used to prevent or treat contamination of stormwater runoff by pH modifying sources including, but not limited to: bulk cement, cement kiln dust, fly ash, new concrete washing and curing waters, waste streams generated from concrete grinding and sawing, exposed aggregate processes, and concrete pumping and mixer washout waters. Stormwater discharge shall not cause or contribute to a violation of the water quality standard for pH in the receiving water.

Construction sites shall adjust pH of stormwater if necessary to prevent violation of water quality standards. Project must obtain written approval from the Department of Ecology prior to using chemical treatment other than CO_2 or dry ice to adjust pH.

BMPs to be deployed include:

- BMP C151: Concrete Handling
- BMP C152: Sawcutting and Surfacing Pollution Prevention
- BMP C153: Material Delivery, Storage and Containment
- BMP C154: Concrete Washout Area

Element #10: Control Dewatering

If necessary, dewatering water may be controlled by one or more of the following options:

- Dewatering water with similar characteristics to stormwater runoff at the site may be discharged into a controlled conveyance system prior to discharge to a sediment trap or sediment pond.
- Clean, non-turbid dewatering water may be discharged to a system tributary to state surface waters, as specified in Element #8, provided the dewatering flow does not cause erosion or flooding of receiving waters. These clean waters should not be routed through stormwater sediment pond.
- Highly turbid or contaminated dewatering water from construction equipment operation, clamshell digging, concrete tremie pour, or work inside a cofferdam, shall be handled separately from stormwater.
- Other disposal options, depending on site constraints, may include:
    - Infiltration
    - Transport offsite in a vehicle, such as a vacuum flush truck, for legal disposal in a manner that does not pollute state waters
    - Ecology-approved onsite chemical treatment or other suitable treatment technologies
    - Sanitary sewer discharge with local sewer district approval, if there is no other option
    - Use of a sedimentation bag with outfall to ditch or swale for small volumes of localized dewatering

Element #11: Maintain BMPs

All temporary and permanent erosion and sediment control BMPs shall be maintained and repaired, as needed, to assure continued performance of their intended function in accordance with each BMP's specifications (see Appendix B).

Visual monitoring of all BMPs installed at the site will be conducted at least once every calendar week and within 24 hours of any stormwater or non-stormwater discharge from the site. If the site becomes inactive and is temporarily stabilized, the inspection frequency may be reduced to once every calendar month.

All temporary erosion and sediment control BMPs shall be removed within 30 days after achieving final site stabilization, or after the temporary BMP is no longer needed.

Trapped sediment shall be removed or stabilized on site. Disturbed soil resulting from removal of BMPs or vegetation shall be permanently stabilized.

BMPs to be deployed include:

- BMP C150: Materials on Hand

Element #12: Manage the Project

This project is expected to be completed in a single phase. Revegetation of exposed areas and maintenance of that vegetation shall be an integral part of the clearing and grading activities.

Less than 1 acre of total area will be disturbed; therefore site inspections may be conducted by a Certified Erosion and Sediment Control Lead (CESCL) or other inspector without CESCL certification who has the skills to assess the site conditions and construction activities that could impact the quality of stormwater and to assess the effectiveness of Construction SWPPP measures used to control the quality of stormwater discharges. The inspector shall:

- Examine stormwater visually for the presence of suspended sediment, turbidity, discoloration, and oil sheen.
- Evaluate the effectiveness of BMPs and determine if it is necessary to install, maintain, or repair BMPs to improve the quality of stormwater discharges.
- Review the SWPPP for compliance with the 12 construction SWPPP elements and make appropriate revisions within 7 days of an inspection, if necessary.
- Immediately begin the process of fully implementing and maintaining appropriate source control and/or treatment BMPs as soon as possible, addressing the problems no later than within 10 days of an inspection, when necessary. If installation of necessary treatment BMPs is not feasible within 10 days, the inspector may request an extension within the initial 10-day response period.
- Document BMP implementation and maintenance in the site logbook (see Appendix C).
- Inspect all areas disturbed by construction activities, all BMPs, and all stormwater discharge points at least once every calendar week and within 24 hours of any discharge from the site. The inspector may reduce the inspection frequency for temporary stabilized, inactive sites to once every calendar month during the dry season.

Clearing and grading activities for developments shall be permitted only if conducted pursuant to an approved site development plan that establishes permitted area of clearing, grading, cutting, and filling. When the permitted clearing and grading areas are established, consideration shall be given to minimizing removal of existing trees and minimizing disturbance/compaction of native soils except as needed for construction purposes. Critical or sensitive areas, buffers, native growth protection easements, and/or tree detention areas as may be required by local jurisdiction, shall be delineated prior to land disturbance.

Seasonal Work Limitations:

- From October 1 through April 30, clearing, grading, and other soil disturbing activities shall only be permitted if shown on the satisfaction of the county that silt-laden runoff will be prevented from leaving the site through a combination of the following:
    - Site conditions include existing vegetative coverage, slope, soil type, and proximity to receiving waters.

    - Limitations on activities and the extent of disturbed areas.
    - Proposed ESC measures.
- Based on the information provided and/or local weather conditions, the county may expand or restrict the seasonal limitation of onsite disturbance. The county will take enforcement action – such as a notice of violation, administrative order, penalty, or stop-work order under the following circumstances:
    - If, during the course of any construction activity or soil disturbance during seasonal limitation period, sediment leaves the construction site causing a violation of the surface water quality standard.
    - If clearing and grading limits or ESC measures shown in the approved plan are not maintained.
- The following activities are exempt from the seasonal clearing and grading limitations:
    - Routine maintenance and necessary repair of ESC BMPs
    - Routine maintenance of public facilities or existing utility structures that do not expose the soil or result in the removal of vegetative cover to soil
    - Activities where there is 100 percent infiltration of surface water runoff within the site in approved and installed ESC facilities.

The primary project applicant shall evaluate, with input from utilities and other contractors, the stormwater management requirements for the entire project, including the utilities, when preparing the Construction SWPPP.

This SWPPP shall be maintained and updated as necessary to provide continued protection. If BMPs shown on the drawings or listed within this SWPPP are not sufficient, additional BMPs shall be deployed. If needed, additional BMPs may be selected from the Pierce County Stormwater and Site Development Manual or be site-specific.

A copy of this SWPPP (modified as necessary), and copies of all monitoring and inspection logs shall be maintained on site during construction activities, and made available for review by the owner, tenant, engineer, County, and Ecology, upon request.

BMPs to be deployed include:
- BMP C150: Materials on Hand
- BMP C162: Scheduling

Element #13: Protect Low Impact Development BMPs

Low Impact Development BMPs include porous concrete pavement and an infiltration trench. Given the centralized location of these items, it will be difficult for the contractor to avoid running equipment back and forth across them. That said, these items are annotated on the drawings and notation is provided to avoid construction traffic and stockpiling of materials to the extent practicable.

4.0 CONCLUSION

The proposed project will disturb approximately 0.20 acres. The proposed BMPs include temporary high visibility plastic fence and silt fence. The site may potentially require such BMPs as wattles and plastic covering based on the site/weather conditions.

All BMPs are designed per Pierce County code. This report is part of a Stormwater Pollution Prevention Plan (SWPPP) and includes all the required elements for a Temporary Erosion and Sediment Control (TESC) Plan per the Pierce County Stormwater and Site Development Manual.

5.0 REFERENCES

Geotechnical Engineering Investigation; Proposed Addition – Fire Station 5-7. Kane Environmental Inc. Seattle, WA. April 14, 2010.

Memorandum: Updated Seismic Parameters; Proposed Fire Station 5-7 Additions. Cobalt Geosciences, LLC. Kenmore, WA. January 18, 2023.

Pierce County Stormwater Management and Site Development Manual. Ordinance No. 2021-45. Pierce County Surface Water Management. Tacoma, WA. July 2021.

This page intentionally left blank.

Appendix A Figures

Figure 2: Existing Conditions Plan

Figure 3: Soils Map

Figure 4: Clearing & Erosion Control Plan

Figure 5: Erosion Control Notes & Details

This page intentionally left blank.

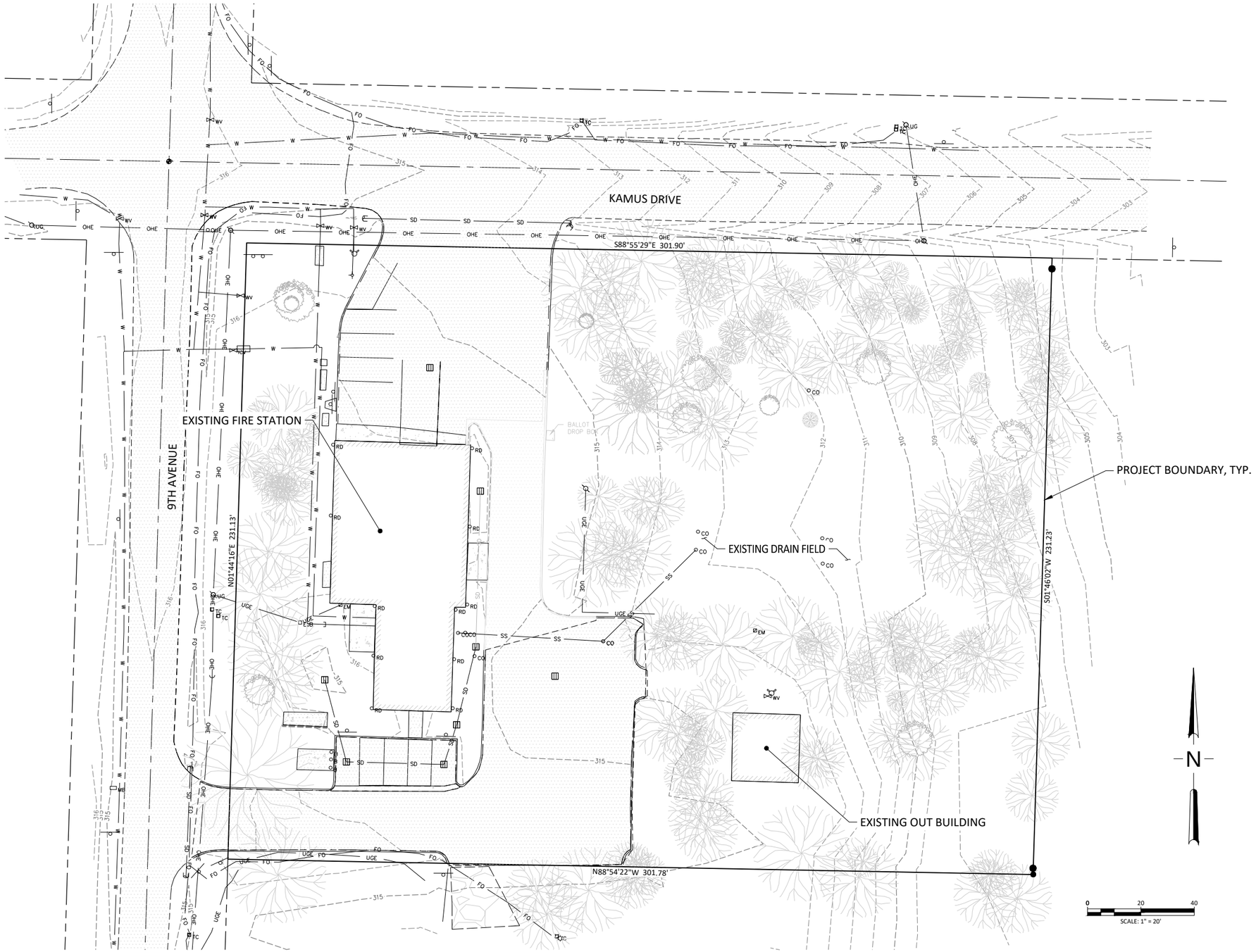

MacKay Sposito

ENERGY PUBLIC WORKS LAND DEVELOPMENT

www.mackaysposito.com

STATION 53 - GIG HARBOR FIRE AND MEDIC ONE

FOX ISLAND, WA

EXISTING CONDITIONS PLAN

FIG. 2

FILE: J:\18016 - GHFMO STATION 53\500 DESIGN\501 DOCUMENTS\REPORTS AND MEMOS\ABRV DRAINAGE REPORT\APP A FIGURES\CAD\FIG 2 - EXISTING CONDITIONS PLAN.DWG

This page intentionally left blank.

Map Unit Legend

Map Unit Symbol	Map Unit Name	Acres in AOI	Percent of AOI
16B	Harstine gravelly ashy sandy loam, 0 to 6 percent slopes	2.8	100.0%
Totals for Area of Interest		**2.8**	**100.0%**

MacKay Sposito

ENERGY PUBLIC WORKS LAND DEVELOPMENT

www.mackaysposito.com

STATION 53 - GIG HARBOR FIRE AND MEDIC ONE

FOX ISLAND, WA

SOILS MAP

FIG. 3

FILE: J:\18016 - GHFMO STATION 53\500 DESIGN\501 DOCUMENTS\REPORTS AND MEMOS\ABRV DRAINAGE REPORT\APP A FIGURES\CAD\FIG 3 - SOILS MAP.DWG

This page intentionally left blank.

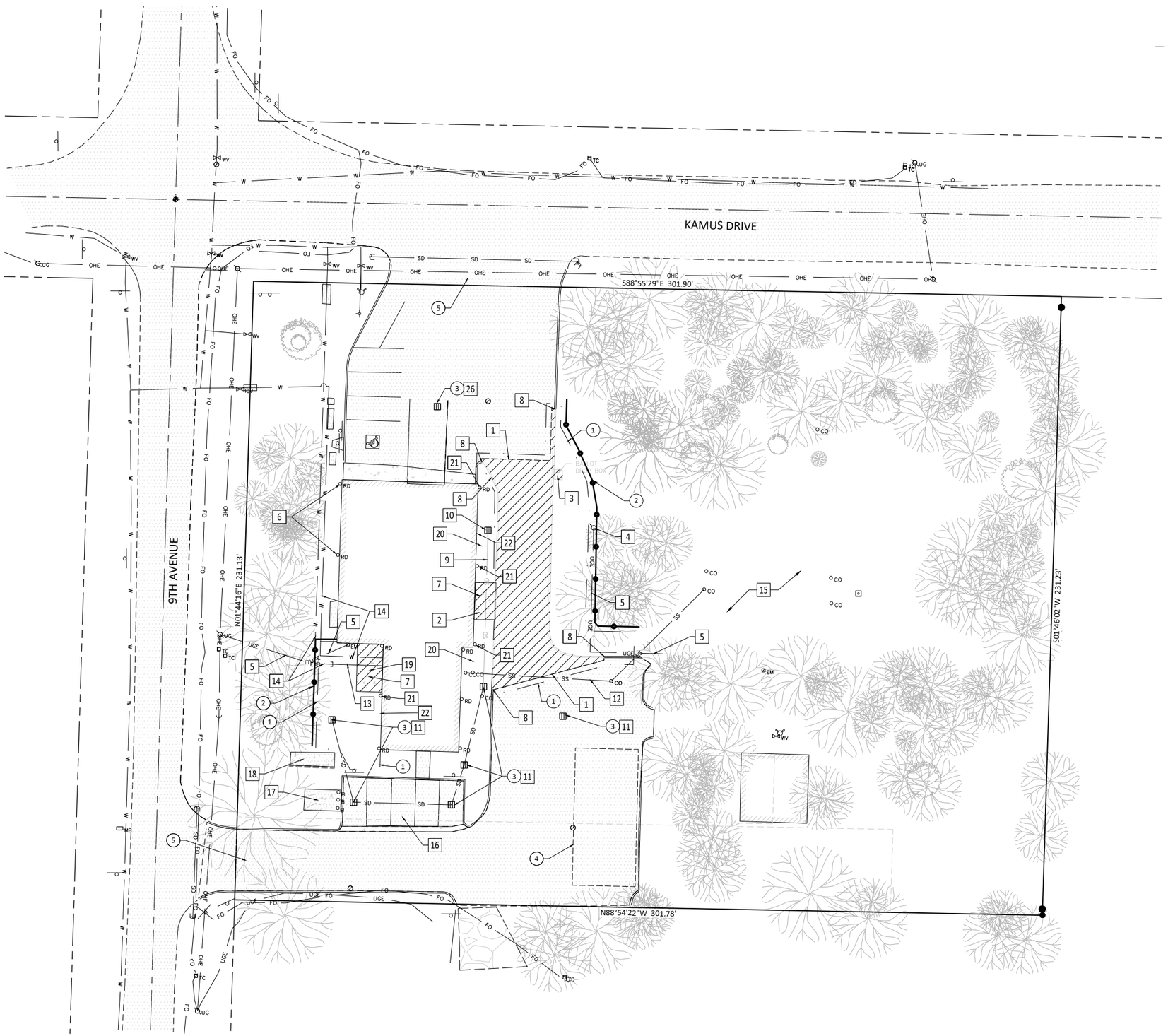

PRIVATE IMPROVEMENTS

1011484
PERMIT #

DEVELOPMENT ENGINEER

DATE

PIERCE COUNTY ORDINANCE NOs: STORM 2021-45 ROAD

1. A PRE-CONSTRUCTION MEETING SHALL BE REQUESTED AT LEAST 48-HOURS IN ADVANCE OF THE START OF CONSTRUCTION. CONTACT LARRY FREMONT, THE AREA INSPECTOR, AT 253-798- 7187.
2. APPOINT A CERTIFIED EROSION AND SEDIMENT CONTROL LEAD WHO SHALL BE PROVIDED A COPY OF THE SWPPP, EROSION CONTROL PLAN & INSPECTION SCHEDULE.
3. FAILURE TO OBTAIN REQUIRED INSPECTIONS MAY ENDANGER OR DELAY PROJECT APPROVAL.
4. ALL WORK IN THE PUBLIC RIGHT-OF-WAY REQUIRES A GENERAL RIGHT-OF-WAY PERMIT FROM PIERCE COUNTY PLANNING AND PUBLIC WORKS.

EROSION CONTROL KEY NOTES

1. LIMIT OF DISTURBANCE
2. SILT FENCE, SEE DETAIL 3, SHEET C01.02
3. INLET PROTECTION, SEE DETAIL 4, SHEET C01.02
4. STOCKPILE AREA. PROVIDE WATTLES, SANDBAGS, OR SIMILAR PERIMETER PROTECTION AND COVERAGE AS NECESSARY.
5. PROVIDE STREET SWEEPING AS NECESSARY TO PREVENT SEDIMENT FROM TRACKING INTO RIGHT-OF-WAY.

DEMOLITION KEY NOTES

1. SAWCUT EXISTING PAVEMENT
2. REMOVE & DISPOSE CHAIN LINK FENCE TRASH ENCLOSURE
3. FORMER BALLOT BOX REMOVED BY OTHERS
4. PRESERVE & PROTECT EXISTING LIGHT POLE
5. PRESERVE & PROTECT EXISTING UNDERGROUND POWER CONDUIT
6. CLEAR VEGETATED DEBRIS FROM EXISTING DOWNSPOUTS AND SPLASH BLOCKS
7. DEMOLISH & DISPOSE ASPHALT AND CONCRETE
8. DEMOLISH EXISTING CURB
9. REMOVE & DISPOSE EXISTING STORM PIPE
10. REMOVE & DISPOSE EXISTING CATCHBASIN
11. PRESERVE & PROTECT EXISTING CATCH BASIN
12. PRESERVE & PROTECT EXISTING SANITARY SEWER
13. REMOVE & DISPOSE EXISTING WATER LINE
14. PRESERVE & PROTECT EXISTING WATER LINE
15. EXISTING SEPTIC SYSTEM APPROX. LOCATION; PRESERVE & PROTECT
16. PRESERVE & PROTECT EXISTING POROUS ASPHALT AND INFILTRATION TRENCH
17. PRESERVE & PROTECT GENERATOR
18. PRESERVE & PROTECT PROPANE TANK
19. SALVAGE AND RELOCATE EXISTING PICNIC TABLE. SEE ARCH.
20. SALVAGE AND REUSE EXISTING COBBLES (TYP.)
21. REMOVE & DISPOSE DOWNSPOUT
22. DEMOLISH & RE-ROUTE FOUNDATION DRAIN AROUND NEW BUILDING ADDITION

CALL
2 BUSINESS DAYS
BEFORE YOU DIG
811
"It's the Law"
www.callbeforeyoudig.com

RICE fergus MILLER
ARCHITECTURE INTERIORS PLANNING VISUAL
275 FIFTH STREET, SUITE 100
BREMERTON, WA 98337
360-377-8773
RFMARCH.COM

MacKay Sposito
ENERGY PUBLIC WORKS LAND DEVELOPMENT
www.mackaysposito.com

ERIC J. PILCHER
STATE OF WASHINGTON
43952
REGISTERED
PROFESSIONAL ENGINEER

STATION 53 ADDITION
GIG HARBOR FIRE AND MEDIC ONE

GIG HARBOR, WASHINGTON

PROJECT # 2022010.03

PERMIT SET

ISSUE DATE MAY 1, 2023

REVISION SCHEDULE

DEMOLITION & TESC

SHEET #
C01.01

DATE/TIME PRINTED: 6/23/2023 6:01 AM
J:\18016 - GHFMO Station 53\500 Design\502 Drawings\Sheets\18016 - C01.01 Demolition & TESC.dwg

This page intentionally left blank.

STANDARD EROSION AND SEDIMENT CONTROL NOTES

1. APPROVAL OF THIS CONSTRUCTION SWPPP DOES NOT CONSTITUTE AN APPROVAL OF PERMANENT ROAD
   OR DRAINAGE DESIGN (E.G., SIZE AND LOCATION OF ROADS, PIPES, RESTRICTORS, CHANNELS, RETENTION/
   DETENTION/INFILTRATION FACILITIES, UTILITIES, ETC.).
2. THE IMPLEMENTATION OF THIS CONSTRUCTION SWPPP AND THE CONSTRUCTION, MAINTENANCE, REPLACEMENT, AND UPGRADING OF THESE CONSTRUCTION SWPPP FACILITIES IS THE RESPONSIBILITY OF THE APPLICANT/CONTRACTOR UNTIL ALL CONSTRUCTION IS COMPLETED AND APPROVED AND VEGETATION/LANDSCAPING IS ESTABLISHED.
3. THE BOUNDARIES OF THE CLEARING LIMITS SHOWN ON THIS PLAN SHALL BE CLEARLY FLAGGED IN THE
   FIELD PRIOR TO CONSTRUCTION. DURING THE CONSTRUCTION PERIOD, NO DISTURBANCE BEYOND THE
   FLAGGED CLEARING LIMITS SHALL BE PERMITTED. THE FLAGGING SHALL BE MAINTAINED BY THE APPLICANT/CONTRACTOR FOR THE DURATION OF CONSTRUCTION.
4. THE CONSTRUCTION SWPPP FACILITIES SHOWN ON THIS PLAN MUST BE CONSTRUCTED IN CONJUNCTION WITH ALL CLEARING AND GRADING ACTIVITIES, AND IN SUCH A MANNER AS TO INSURE THAT SEDIMENT AND SEDIMENT LADEN WATER DO NOT ENTER THE DRAINAGE SYSTEM, ROADWAYS, OR VIOLATE APPLICABLE WATER STANDARDS.
5. THE CONSTRUCTION SWPPP FACILITIES SHOWN ON THIS PLAN ARE THE MINIMUM REQUIREMENTS FOR
   ANTICIPATED SITE CONDITIONS. DURING THE CONSTRUCTION PERIOD, THESE CONSTRUCTION SWPPP FACILITIES SHALL BE UPGRADED AS NEEDED FOR UNEXPECTED STORM EVENTS AND TO ENSURE THAT SEDIMENT AND SEDIMENT-LADEN WATER DO NOT LEAVE THE SITE.
6. THE CONSTRUCTION SWPPP FACILITIES SHALL BE INSPECTED DAILY BY THE APPLICANT/CONTRACTOR AND MAINTAINED AS NECESSARY TO ENSURE THEIR CONTINUED FUNCTIONING.
7. THE CONSTRUCTION SWPPP FACILITIES ON INACTIVE SITES SHALL BE INSPECTED AND MAINTAINED A MINIMUM OF ONCE A MONTH OR WITHIN THE 48 HOURS FOLLOWING A MAJOR STORM EVENT.
8. AT NO TIME SHALL MORE THAN 1-FOOT OF SEDIMENT BE ALLOWED TO ACCUMULATE WITHIN A TRAPPED
   CATCH BASIN. ALL CATCH BASINS AND CONVEYANCE LINES SHALL BE CLEANED PRIOR TO PAVING. THE CLEANING OPERATION SHALL NOT FLUSH SEDIMENT LADEN WATER INTO THE DOWNSTREAM SYSTEM.
9. STABILIZED CONSTRUCTION ENTRANCES SHALL BE INSTALLED AT THE BEGINNING OF CONSTRUCTION AND
   MAINTAINED FOR THE DURATION OF THE PROJECT. ADDITIONAL MEASURES MAY BE REQUIRED TO INSURE
   THAT ALL PAVED AREAS ARE KEPT CLEAN FOR THE DURATION OF THE PROJECT.

CONSTRUCTION SEQUENCE

1. CALL PIERCE COUNTY INSPECTOR TO ARRANGE A PRE-CONSTRUCTION MEETING.
2. IDENTIFY LIMITS OF CLEARING.
3. INSTALL FILTER FABRIC FENCE AND TREE PROTECTION FENCE.
4. INSTALL ROCK-LINED CONSTRUCTION ENTRANCE(S).
5. CLEAR TO LIMITS SHOWN ON PLAN.
6. SAWCUT AND DEMOLISH EXISTING PAVEMENTS TO LIMITS SHOWN ON THE PLANS.
7. ROUGH GRADE SITE AS DESIGNED.
8. INSTALL BUILDING FOUNDATION.
9. INSTALL SANITARY SEWER SYSTEM (TO SEPTIC).
10. INSTALL STORM DRAINAGE.
11. INSTALL SEDIMENT BARRIERS OVER NEW CATCH BASINS.
12. PAVE FLOOR SLABS AND BEGIN VERTICAL CONSTRUCTION.
13. FINE GRADE FOR CURB AND GUTTER, AND SIDEWALKS.
14. INSTALL CURB AND GUTTER.
15. PAVE SITE.
16. INSTALL SIDEWALKS.
17. HYDROSEED ALL SLOPES NOT LANDSCAPED OR ANTICIPATED FOR ADDITIONAL WORK WITHIN 6 MONTHS.
18. COMPLETE LANDSCAPING.
19. REMOVE SEDIMENT BARRIERS.

SEEDING NOTES

1. SEED MIXTURE SHALL BE AS SHOWN BELOW, AND SHALL BE APPLIED AT THE RATE OF 120 POUNDS PER ACRE.

NAME	PROPORTION BY WEIGHT	PERCENT PURITY	PERCENT GERMINATION
RED TOP	10%	92	90
ANNUAL RYE	40%	98	90
CHEWING FESCUE	40%	97	80
WHITE DUTCH CLOVER	10%	96	90

2. SEED BEDS PLANTED BETWEEN MAY 1 AND OCTOBER 31 WILL REQUIRE IRRIGATION AND OTHER MAINTENANCE AS NECESSARY TO FOSTER AND PROTECT THE ROOT STRUCTURE.
3. FOR SEED BEDS PLANTED BETWEEN OCTOBER 31 AND APRIL 30, ARMORING OF THE SEED BED WILL BE NECESSARY. (E.G., GEOTEXTILES, JUTE MAT, CLEAR PLASTIC COVERING).
4. BEFORE SEEDING, INSTALL NEEDED SURFACE RUNOFF CONTROL MEASURES SUCH AS GRADIENT TERRACES, INTERCEPTOR DIKES, SWALES, LEVEL SPREADERS AND SEDIMENT BASINS.
5. THE SEEDBED SHALL BE FIRM WITH A FAIRLY FINE SURFACE, FOLLOWING SURFACE ROUGHENING. PERFORM ALL OPERATIONS ACROSS OR AT RIGHT ANGLES TO THE SLOPE.
6. FERTILIZERS ARE TO BE USED ACCORDING TO SUPPLIERS RECOMMENDATIONS. AMOUNTS USED SHOULD BE MINIMIZED, ESPECIALLY ADJACENT TO WATER BODIES AND WETLANDS.

SILT FENCE NOTES

1. THE CONTRACTOR SHALL INSTALL AND MAINTAIN TEMPORARY SILT FENCES AT THE LOCATIONS SHOWN IN THE PLANS.
2. CONSTRUCT SILT FENCES IN AREAS OF CLEARING, GRADING, OR DRAINAGE PRIOR TO STARTING THOSE ACTIVITIES.
3. THE SILT FENCE SHALL HAVE A 2-FEET MIN. AND 2.5-FEET MAX. HEIGHT ABOVE THE ORIGINAL GROUND SURFACE.
4. THE FILTER FABRIC SHALL BE SEWN TOGETHER AT THE POINT OF MANUFACTURE TO FORM FILTER FABRIC LENGTHS AS REQUIRED. LOCATE ALL SEWN SEAMS AT SUPPORT POSTS. ALTERNATIVELY, TWO SECTIONS OF SILT FENCE CAN BE OVERLAPPED, PROVIDED THE CONTRACTOR CAN DEMONSTRATE, TO THE SATISFACTION OF THE ENGINEER, THAT THE OVERLAP IS LONG ENOUGH AND THAT THE ADJACENT FENCE SECTIONS ARE CLOSE ENOUGH TOGETHER TO PREVENT SILT LADEN WATER FROM ESCAPING THROUGH THE FENCE AT THE OVERLAP.
5. ATTACH THE FILTER FABRIC ON THE UP-SLOPE SIDE OF THE POSTS AND SECURE WITH STAPLES, WIRE, OR IN ACCORDANCE WITH THE MANUFACTURER'S RECOMMENDATIONS. ATTACH THE FILTER FABRIC TO THE POSTS IN A MANNER THAT REDUCES THE POTENTIAL FOR TEARING.
6. SUPPORT THE FILTER FABRIC WITH WIRE OR PLASTIC MESH, DEPENDENT ON THE PROPERTIES OF THE GEOTEXTILE SELECTED FOR USE. IF WIRE OR PLASTIC MESH IS USED, FASTEN THE MESH SECURELY TO THE UP-SLOPE SIDE OF THE POSTS WITH THE FILTER FABRIC UP-SLOPE OF THE MESH.
7. MESH SUPPORT, IF USED, SHALL CONSIST OF STEEL WIRE WITH A MAXIMUM MESH SPACING OF 2-INCHES, OR A PREFABRICATED POLYMERIC MESH. THE STRENGTH OF THE WIRE OR POLYMERIC MESH SHALL BE EQUIVALENT TO OR GREATER THAN 180 POUNDS GRAB TENSILE STRENGTH. THE POLYMERIC MESH MUST BE AS RESISTANT TO THE SAME LEVEL OF ULTRAVIOLET RADIATION AS THE FILTER FABRIC IT SUPPORTS.
8. BURY THE BOTTOM OF THE FILTER FABRIC 8-INCHES MIN. BELOW THE GROUND SURFACE. BACKFILL AND TAMP SOIL IN PLACE OVER THE BURIED PORTION OF THE FILTER FABRIC, SO THAT NO FLOW CAN PASS BENEATH THE FENCE AND SCOURING CANNOT OCCUR. THE WIRE OR POLYMERIC MESH SHALL EXTEND INTO THE GROUND 3-INCHES MIN.
9. DRIVE OR PLACE THE FENCE POSTS INTO THE GROUND 18-INCHES MINIMUM. A 12-INCH MINIMUM DEPTH IS ALLOWED IF TOPSOIL OR OTHER SOFT SUBGRADE SOIL IS NOT PRESENT AND 18-INCHES CANNOT BE REACHED. INCREASE FENCE POST MIN. DEPTHS BY 6-INCHES IF THE FENCE IS LOCATED ON SLOPES OF 3H:1V OR STEEPER AND THE SLOPE IS PERPENDICULAR TO THE FENCE. IF REQUIRED POST DEPTHS CANNOT BE OBTAINED, THE POSTS SHALL BE ADEQUATELY SECURED BY BRACING OR GUYING TO PREVENT OVERTURNING OF THE FENCE DUE TO SEDIMENT LOADING.
10. USE WOOD, STEEL, OR EQUIVALENT POSTS. THE SPACING OF THE SUPPORT POSTS SHALL BE A MAXIMUM OF 6-FEET. POSTS SHALL CONSIST OF EITHER:
    - WOOD WITH DIMENSIONS OF 2-INCHES BY 2-INCHES WIDE MIN. AND A 3-FEET MIN. LENGTH. WOOD POSTS SHALL BE FREE OF DEFECTS SUCH AS KNOTS, SPLITS, OR GOUGES.
    - NO. 6 STEEL REINFORCEMENT BAR OR LARGER.
    - ASTM A 120 STEEL PIPE WITH A MINIMUM DIAMETER OF 1-INCH.
    - U, T, L, OR C SHAPE STEEL POSTS WITH A MINIMUM WEIGHT OF 1.35 POUNDS/FEET.
    - OTHER STEEL POSTS HAVING EQUIVALENT STRENGTH AND BENDING RESISTANCE TO THE POST SIZES LISTED ABOVE.
11. LOCATE SILT FENCES ON CONTOUR AS MUCH AS POSSIBLE, EXCEPT AT THE ENDS OF THE FENCE, WHERE THE FENCE SHALL BE TURNED UPHILL SUCH THAT THE SILT FENCE CAPTURES THE RUNOFF WATER AND PREVENTS WATER FROM FLOWING AROUND THE END OF THE FENCE.
12. IF THE FENCE MUST CROSS CONTOURS, WITH THE EXCEPTION OF THE ENDS OF THE FENCE, PLACE GRAVEL CHECK DAMS PERPENDICULAR TO THE BACK OF THE FENCE TO MINIMIZE CONCENTRATED FLOW AND EROSION. THE SLOPE OF THE FENCE LINE WHERE CONTOURS MUST BE CROSSED SHALL NOT BE STEEPER THAN 3H:1V.
    - GRAVEL CHECK DAMS SHALL BE APPROXIMATELY 1-FOOT DEEP AT THE BACK OF THE FENCE. GRAVEL CHECK DAMS SHALL BE CONTINUED PERPENDICULAR TO THE FENCE AT THE SAME ELEVATION UNTIL THE TOP OF THE CHECK DAM INTERCEPTS THE GROUND SURFACE BEHIND THE FENCE.
    - GRAVEL CHECK DAMS SHALL CONSIST OF CRUSHED SURFACING BASE COURSE, GRAVEL BACKFILL FOR WALLS, OR SHOULDER BALLAST. GRAVEL CHECK DAMS SHALL BE LOCATED EVERY 10-FEET ALONG THE FENCE WHERE THE FENCE MUST CROSS CONTOURS.

INLET PROTECTION NOTES

1. PLACE CONCRETE BLOCKS LENGTHWISE ON THEIR SIDES IN A SINGLE ROW AROUND THE PERIMETER OF THE INLET, SO THAT THE OPEN ENDS FACE OUTWARD, NOT UPWARD. THE ENDS OF ADJACENT BLOCKS SHALL ABUT. THE HEIGHT OF THE BARRIER CAN BE VARIED, DEPENDING ON DESIGN NEEDS, BY STACKING COMBINATIONS OF BLOCKS THAT ARE 4 INCHES, AND 12 INCHES WIDE. THE ROW OF BLOCKS SHALL BE AT LEAST 12 INCHES BUT NO GREATER THAN 24 INCHES HIGH.
2. PLACE WIRE MESH OVER THE OUTSIDE VERTICAL FACE (OPEN END) OF THE CONCRETE BLOCKS TO PREVENT STONE FROM BEING WASHED THROUGH THE BLOCKS. USE HARDWARE CLOTH OR COMPARABLE WIRE MESH WITH 1/2 INCH OPENINGS.
3. PILE STONE AGAINST THE WIRE MESH TO THE TOP OF THE BLOCKS. USE 3/4 TO 3 INCH GRAVEL.
4. PLACE WIRE MESH OVER THE DROP INLET SO THAT THE WIRE EXTENDS A MINIMUM OF 1 FOOT BEYOND EACH SIDE OF THE INLET STRUCTURE. USE HARDWARE CLOTH OR COMPARABLE WIRE MESH WITH 1/2 INCH OPENINGS. IF MORE THAN ONE STRIP OF MESH IS NECESSARY, OVERLAP THE STRIPS. PLACE FILTER FABRIC OVER WIRE MESH.
5. PLACE 3/4 INCH GRAVEL OVER THE WIRE MESH. THE DEPTH OF STONE SHALL BE AT LEAST 12 INCHES OVER THE ENTIRE INLET OPENING. EXTEND THE STONE BEYOND THE INLET OPENING AT LEAST 18 INCHES ON ALL SIDES.
6. IF THE STONE FILTER BECOMES CLOGGED WITH SEDIMENT, THE STONES MUST BE PULLED AWAY FROM THE INLET AND CLEANED OR REPLACED.

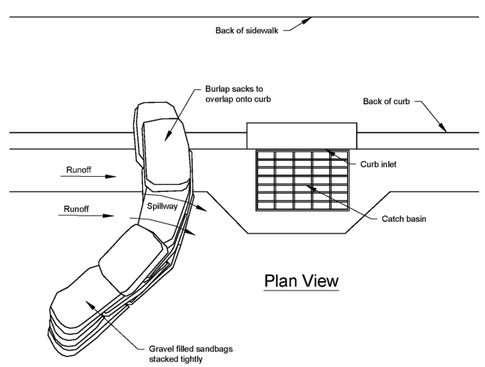

Notes:
1. Place curb type sediment barriers on gently sloping street segments, where water can pond and allow sediment to separate from runoff.
2. Sandbags of either burlap or woven 'geotextile' fabric, are filled with gravel, layered and packed tightly.
3. Leave a one sandbag gap in the top row to provide a spillway for overflow.
4. Inspect barriers and remove sediment after each storm event. Sediment and gravel must be removed from the traveled way immediately.

NOT TO SCALE

1 CURB AND GUTTER BARRIER
NOT TO SCALE

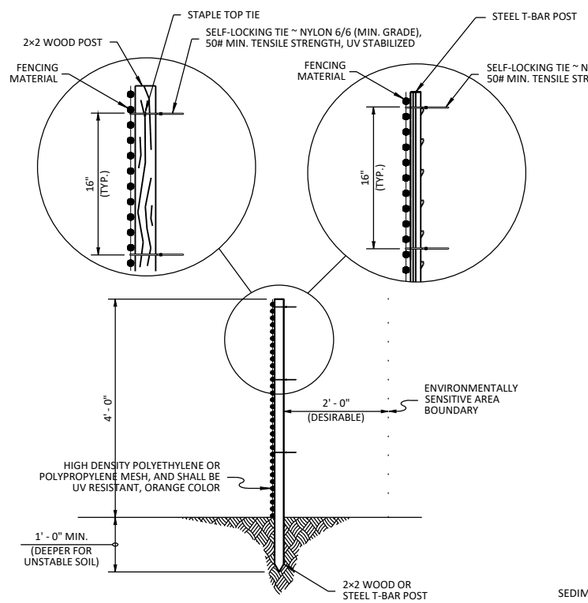

2 HIGH VISIBILITY FENCE
NOT TO SCALE

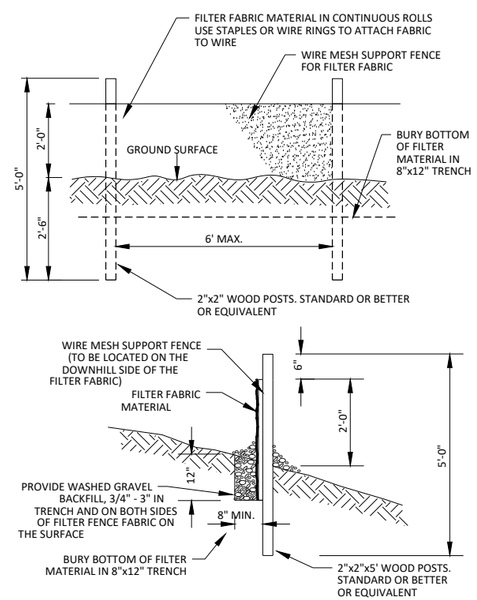

3 FILTER FABRIC FENCE
NOT TO SCALE

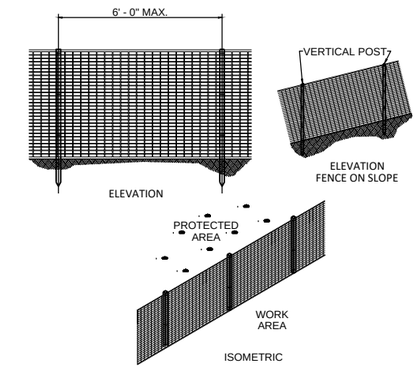

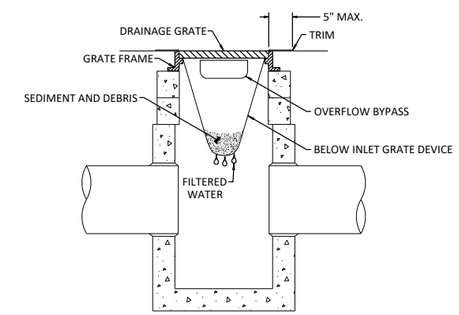

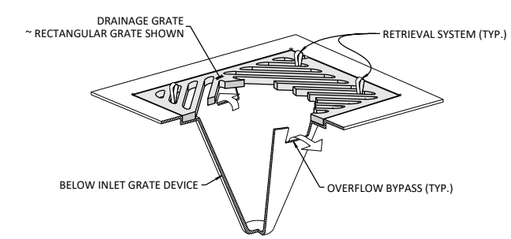

NOTES:
1. SIZE THE BELOW INLET GRATE DEVICE (BIGD) FOR THE STORM WATER STRUCTURE IT WILL SERVICE.
2. THE BIGD SHALL HAVE A BUILT-IN HIGH-FLOW RELIEF SYSTEM (OVERFLOW BYPASS).
3. THE RETRIEVAL SYSTEM MUST ALLOW REMOVAL OF THE BIGD WITHOUT SPILLING THE COLLECTED MATERIAL.
4. PERFORM MAINTENANCE IN ACCORDANCE WITH STANDARD SPECIFICATION 8-01.3(15).

4 STORM DRAIN INLET PROTECTION
NOT TO SCALE

CALL 2 BUSINESS DAYS BEFORE YOU DIG
811
"It's the Law"
www.callbeforeyoudig.com

PRIVATE IMPROVEMENTS
1011484 PERMIT #
DEVELOPMENT ENGINEER — DATE
PIERCE COUNTY ORDINANCE NOs: STORM 2021-45 ROAD
1. A PRE-CONSTRUCTION MEETING SHALL BE REQUESTED AT LEAST 48-HOURS IN ADVANCE OF THE START OF CONSTRUCTION. CONTACT LARRY FREMONT, THE AREA INSPECTOR, AT 253-798- 7187.
2. APPOINT A CERTIFIED EROSION AND SEDIMENT CONTROL LEAD WHO SHALL BE PROVIDED A COPY OF THE SWPPP, EROSION CONTROL PLAN & INSPECTION SCHEDULE.
3. FAILURE TO OBTAIN REQUIRED INSPECTIONS MAY ENDANGER OR DELAY PROJECT APPROVAL.
4. ALL WORK IN THE PUBLIC RIGHT-OF-WAY REQUIRES A GENERAL RIGHT-OF-WAY PERMIT FROM PIERCE COUNTY PLANNING AND PUBLIC WORKS.

RICE Fergus MILLER
ARCHITECTURE INTERIORS PLANNING VISUAL
275 FIFTH STREET, SUITE 100
BREMERTON, WA 98337
360-377-8773
RFMARCH.COM

MacKay Sposito
ENERGY PUBLIC WORKS LAND DEVELOPMENT
www.mackaysposito.com

ERIC PILCHER, STATE OF WASHINGTON, 43952, REGISTERED PROFESSIONAL ENGINEER

STATION 53 ADDITION
GIG HARBOR FIRE AND MEDIC ONE
GIG HARBOR, WASHINGTON

PROJECT # 2022010.03
PERMIT SET
ISSUE DATE MAY 1, 2023
REVISION SCHEDULE

TESC NOTES & DETAILS

SHEET # C01.02

DATE/TIME PRINTED: 6/23/2023 6:24 AM
J:\18016 - GHFMO Station 53\500 Design\502 Drawings\Sheets\18016 - C01.02 TESC Notes & Details.dwg

This page intentionally left blank.

Cobalt Geosciences, LLC
P.O. Box 82243
Kenmore, Washington 98028

January 18, 2023

Eric Pilcher
epilcher@mackaysposito.com
Howard Struve
Rice Fergus Miller
hstruve@rfmarch.com

RE: Updated Seismic Parameters
Proposed Fire Station 5-7 Additions
10521 Crescent Valley Drive NW
Gig Harbor, Washington

In accordance with your authorization, Cobalt Geosciences, LLC has prepared this letter to present updated seismic parameters per the most recent International Building Code (IBC). In preparation of this letter, we have reviewed the previous geotechnical report for the project prepared by Kane Environmental (this author), dated April 14, 2010. The recommendations in this report remain valid and will/should be attached as part of permitting.

Seismic Hazard

The overall subsurface profile corresponds to a Site Class *D* as defined by Table 1613.5.2 of the International Building Code (IBC). A Site Class *D* applies to an overall profile consisting of medium dense to very dense soils within the upper 100 feet.

We referenced the U.S. Geological Survey (USGS) Earthquake Hazards Program Website to obtain values for S_S, S_1, F_a, and F_v. The USGS website includes the most updated published data on seismic conditions. The following tables provide seismic parameters from the USGS web site with referenced parameters from ASCE 7-16.

Seismic Design Parameters (ASCE 7-16)

Site Class	Spectral Acceleration at 0.2 sec. (g)	Spectral Acceleration at 1.0 sec. (g)	Site Coefficients		Design Spectral Response Parameters		Design PGA/PGA_M
			F_a	F_v	S_{DS}	S_{D1}	
D	1.506	0.525	1.0	Null	1.004	Null	0.639/0.703

Additional seismic considerations include liquefaction potential and amplification of ground motions by soft/loose soil deposits. The liquefaction potential is highest for loose sand with a high groundwater table. The site has a low likelihood of liquefaction. For items listed as "Null" see Section 11.4.8 of the ASCE.

We should review the final plans when they become available to verify that the recommendations contained in the Kane report (this author) remain valid and do not require updating.

Closure

The information presented herein is based upon professional interpretation utilizing standard practices and a degree of conservatism deemed proper for this project. We emphasize that this report is valid for this project as outlined above and for the current site conditions and should not be used for any other site.

Sincerely,

Cobalt Geosciences, LLC

1/18/2023
Phil Haberman, PE, LG, LEG
Principal

Geotechnical Engineering Investigation
Proposed Addition – Fire Station 5-7
10521 Crescent Valley Drive Northwest
Gig Harbor, Washington

Prepared For:

Pierce County Fire District No 5
C/O Rice Fergus Miller Architecture and Planning
Attn: Mr. Howard Struve
262 – 4th Street
Bremerton, Washington 98337

April 14, 2010

Prepared By:

Kane Environmental, Inc.
3831 Stone Way Avenue North
Seattle, WA 98103

State of Washington
Engineering Geologist
2513
Licensed Geologist
4/14/10
PHILLIP HABERMAN

Phil Haberman, P.G., P.E.G.
Senior Engineering Geologist

SEAN LEE CARAWAY
STATE OF WASHINGTON
38046
REGISTERED
PROFESSIONAL ENGINEER
4/14/10

Sean L. Caraway, P.E.
Senior Geotechnical Engineer

PH/sc

TABLE OF CONTENTS

1.0 INTRODUCTION **3**

1.1 Project Description 3
1.2 Scope of Services 3

2.0 SITE DISCUSSION **3**

2.1 Site Location and Description 4
2.2 Geologic Setting 4
2.3 Subsurface Soil Conditions 4
2.4 Groundwater Conditions 5

3.0 GEOLOGIC HAZARDS **5**

3.1 Erosion Hazard 5
3.2 Seismic Hazard 6

4.0 CONCLUSIONS & RECOMMENDATIONS **6**

4.1 Earthwork **7**
4.1.1 Site Preparation 7
4.1.2 Re Use of On Site Native Soils 8
4.1.3 Imported Structural Fill 8
4.1.4 Fill Placement and Compaction Criteria 8
4.1.5 Temporary Excavations 8
4.1.6 Utility Trenches 9
4.1.7 Erosion and Sediment Control 10
4.1.8 Grounwater Influence on Construction 10

4.2 Foundations **11**
4.2.1 Foundation Design 11
4.2.2 Foundation Settlement 11
4.2.3 Lateral Resistance 11
4.2.4 Footing Drainage 12

4.3 Below Grade Walls and Retaining Walls **12**
4.3.1 Design Parameters 12
4.3.2 Wall Drainage 13
4.3.3 Wall Backfill and Compaction 13

4.4 Slab on Grade Floors **13**
4.5 Infiltration **14**
4.6 General Site Drainage **15**
4.7 Pavements **15**
4.8 Testing and Inspection **16**

5.0 LIMITATIONS **16**

6.0 REFERENCES **18**

Figure 1 – Vicinity Map
Figure 2 – Site Plan
Appendix A – Boring Logs

1.0 INTRODUCTION

This report presents the results of our Geotechnical Engineering Investigation for the proposed addition to the existing Fire Station 5-7 located at 10521 Crescent Valley Drive Northwest in Gig Harbor, Washington (Figure 1). A site plan showing the approximate boring locations is presented following the text of this report (Figure 2). A description of the field investigation and the boring logs are presented in Appendix A.

1.1 PROJECT DESCRIPTION

The preliminary information we have received indicates that the proposed construction will include a one story addition located along the east side of the existing fire station structure. We anticipate that foundation loads will be light to moderate and that the addition will be supported on a shallow foundation system. We anticipate that site grading will include minor cuts and fills on the order of 2 feet or less. We understand that stormwater management is in the preliminary design phase and the locations and depths of any infiltration or detention system has not been determined.

1.2 SCOPE OF SERVICES

This investigation was conducted to evaluate the shallow soil and groundwater conditions at the site, to develop recommendations for use in design of specific construction elements and to provide criteria for site preparation and structural fill construction.

Our scope of services was performed in general accordance with our proposal for this project, dated February 17, 2010 which included the following:

- A site reconnaissance by a member of our engineering staff to evaluate the surface conditions at the project site.
- A field investigation consisting of drilling and sampling three borings within the property for subsurface analysis. The borings ranged in depth from approximately 6.5 to 9 feet below the existing site grades.
- Evaluation of the data obtained from the investigation and completion of engineering analyses to develop recommendations for use in the project design and preparation of construction specifications.
- Preparation of this report summarizing our findings, the results of our analyses and our conclusions and recommendations for this investigation.

2.0 SITE DISCUSSION

This section describes the geologic setting of the project area and the surface and subsurface conditions observed within the project site at the time of our field investigation. Interpretations of the site conditions are based on our review of available information and the results of our site reconnaissance, subsurface explorations, and analyses.

2.1 SITE LOCATION AND DESCRIPTION

The site is located at 10521 Crescent Valley Drive Northwest in Gig Harbor, Washington. The general location of the site is shown on Figure 1 (Vicinity Map).

The site is comprised of a rectangular parcel (No. 0222325001) with a total area of approximately 1.37 acres. The fire station structure is located in the central portion of the property. Asphalt paved access drives and parking areas are located to the west, north, and east of the structure. A separate housing structure is located in the northeast portion of the property. Additional steel storage containers and structures are located in the east portion of the site. The asphalt is locally cracked and shows signs of distress.

The site generally slopes gently downward toward the west at magnitudes on the order of 5 to 8 percent, with a total topographic relief of approximately 15 feet. The site is vegetated with landscaping trees and shrubs, as well as grass and sparse evergreen trees along the property margins.

The site is bordered to the north and east by single family residences, to the west by Crescent Valley Drive Northwest, and to the south by Drummond Drive.

2.2 GEOLOGIC SETTING

The site lies within the central Puget Lowland. The lowland is part of a regional north-south trending trough that extends from southwestern British Columbia to near Eugene, Oregon. North of Olympia, Washington, this lowland is glacially carved, with a depositional and erosional history including at least four separate glacial advances/retreats. The Puget Lowland is bounded to the west by the Olympic Mountains, and to the east by the Cascade Range. The lowland is filled with glacial and nonglacial sediments consisting of interbedded gravel, sand, silt, till, and peat lenses.

The Geologic Map of Washington – Northwest Quadrant, indicates that the site is near the contacts of Vashon Glacial Till and Vashon Advance Outwash. Vashon Glacial Till is typically characterized by an unsorted, nonstratified mixture of clay, silt, sand, gravel, cobbles and boulders in variable quantities. These materials are typically dense and relatively impermeable. The poor sorting reflects the mixing of the materials as these sediments were overridden and incorporated by the glacial ice. Vashon Advance Outwash consists of sand and gravel with variable amounts or interbeds of silt and clay deposited in front of the advancing glaciers. These materials are relatively permeable and dense.

2.3 SUBSURFACE SOIL CONDITIONS

A field investigation consisting of drilling and sampling three borings was performed in order to evaluate the shallow subsurface soil and groundwater conditions. The borings ranged in depth from approximately 6.5 to 9 feet below the existing site grades. The drilling work was completed on March 22, 2010 by a Kane Environmental subcontractor with a limited access drill rig.

Representative samples of the subsurface soils encountered in the borings were collected and sealed in plastic bags. These samples were transported to our office for further examination and verification of the field classifications. The soils encountered in the borings were examined and visually classified in

accordance with the Unified Soil Classification System (USCS). A more detailed description of the field investigation is presented in Appendix A.

Borings B-1 through B-3 encountered approximately 4 inches of grass and topsoil underlain by approximately 3.25 to 4.25 feet of loose to medium dense, silty-fine to medium grained sand with variable amounts of gravel (Weathered Outwash). This layer was underlain by medium dense to very dense, fine to medium grained sand with variable amounts of silt and gravel (Outwash). This layer continued to the termination depths of the borings.

For additional information about the soils encountered, please refer to the logs of the borings in Appendix A.

2.4 GROUNDWATER CONDITIONS

The borings were checked for the presence of groundwater during and immediately following the drilling operations. Groundwater was encountered in B-1 at 8.5 feet and in B-2 at 6.5 feet below the existing site grades at the time of the drilling operations. Based on our observations of the site elevations, the groundwater elevations in the two borings are consistent in depth. Groundwater was not encountered in B-3.

Water table elevations may fluctuate over time. The groundwater level will dependupon seasonal precipitation, irrigation, land use, and climatic conditions, soil permeability, as well as other factors. Therefore, water levels at the time of the field investigation may be different from those encountered during the construction phase of the project. Groundwater monitoring wells were not installed as part of this investigation, therefore determining long term groundwater fluctuations is beyond the scope of this report.

3.0 GEOLOGIC HAZARDS

3.1 EROSION HAZARD

The Natural Resources Conservation Services (NRCS) maps for Pierce County indicate that the site is underlain by Harstine gravelly sandy loam (6 to 15 percent slopes) with "Slight" to "Moderate" erosion potential in a disturbed state.

Typically, soil erosion potential can be reduced through landscaping and surface water runoff control. Typically erosion of exposed soils will be most noticeable during periods of rainfall and may be controlled by the use of normal temporary erosion control measures, such as silt fences, hay bales, mulching, control ditches and diversion trenches.. The typical wet weather season, with regard to site grading, is from October 31st to April 1st. Erosion control measures should be in place before the onset of wet weather.

3.2 SEISMIC HAZARD

The native soils encountered in the borings were generally medium dense to very dense. The overall soil profile corresponds to a Site Class *D* as defined by Table 1613.5.2 of the 2006 International Building Code (2006 IBC). A Site Class *D* applies to a profile consisting of medium dense to very dense soils within the upper 100 feet.

We referenced the U.S. Geological Survey (USGS) Earthquake Hazards Program Website to obtain values for S_S, S_1, F_a, and F_v. The USGS website includes the most updated published data on seismic conditions. The site specific seismic design parameters and adjusted maximum spectral response acceleration parameters are as follows:

PGA	(Peak Ground Acceleration, in percent of g)
32.59	(10% Probability of Exceedence in 50 years)
57.21	(2% Probability of Exceedence in 50 years)
S_S	126.90% of g
S_1	44.30% of g
F_A	1.00
F_V	1.56

Additional seismic considerations include liquefaction potential and amplification of ground motions by soft soil deposits. The liquefaction potential is highest for loose sand with a high groundwater table. We did encountered medium dense sandy soils in the presence of shallow groundwater; however, we do not anticipate significant seismically induced settlements since these materials are relatively thin. The relatively dense soils interpreted to underlie these materials are considered to have a low potential for liquefaction and amplification of ground motion.

4.0 CONCLUSIONS AND RECOMMENDATIONS

Based on the findings of this investigation and previous geotechnical experience in the project area, it is our opinion that the proposed addition may be supported on a shallow foundation system bearing on the medium dense to very dense native soils, or on properly compacted structural fill placed on the medium dense to very dense native soils. We expect bearing soils to exist at or just below typical footing embedment depths following removal of the existing asphalt and fill materials, generally 1.5 to 2.5 feet below the existing site grades. Bearing soils may exist at greater depth in areas where deep utilities are present in the addition area and local overexcavation of loose materials and/or undocumented fill may be necessary.

Groundwater was encountered in two of our borings and stormwater infiltration may be limited due to the relatively shallow depth of groundwater at the site. The site soils generally consist of poorly graded sand with gravel and are typically well suited for infiltration; however, the shallow depth to groundwater would

limit the depth of any system to approximately 3 feet below existing grades. We can provide additional stormwater recommendations upon request. We anticipate that groundwater is regional and related to the valley location of the site with proximity to a river.

4.1 EARTHWORK

We anticipate that earthwork activities for the project will include clearing and grubbing at or near the location where the addition is proposed, cuts and/or fills on the order of 2 feet or less, utility placement to variable depths, and subgrade preparation for new asphalt paved parking areas.

4.1.1 Site Preparation

General site clearing for the addition and associated features should include removal of vegetation; trees and associated root systems; wood; existing utilities; any existing structures including foundations, basement walls and floors. Site stripping should extend to a minimum depth of 4 to 8 inches (preliminarily; based on our borings and site observations), or until all organics in excess of 3 percent by volume are removed. These materials will not be suitable for use as structural fill. However, stripped topsoil may be stockpiled and reused in landscape or non-structural areas.

After stripping operations and removal of any loose soils or undocumented fill that may impact the development of the site, the building pad areas should be visually inspected to identify any loose areas. Any remaining loose soils should be overexcavated to the level of the medium dense to very dense native soils. The resulting excavations should be filled with approved on site material, or imported structural fill. Structural fill material should be within ± 2 percent of the optimum moisture content, and the soils should be compacted to a minimum of 95 percent of the maximum dry density based on ASTM Test Method D1557.

During wet weather conditions, which typically occur from October through May, subgrade stability problems and grading difficulties may develop due to excess moisture, disturbance of sensitive soils and/or the presence of perched groundwater. Construction during the extended wet weather periods will likely create the need to overexcavate exposed soils as they become disturbed and cannot be recompacted due to elevated moisture contents. **The on site soils have low to moderate silt contents that could result in moisture sensitivity for these materials. If earthwork occurs during the months of October through May, additional overexcavation may be necessary to achieve proper bearing surfaces for pavements and foundations.**

If overexcavation is necessary, it should be confirmed through continuous monitoring and testing by a qualified geotechnical engineer or senior geologist. Soils that have become unstable may require drying and recompaction. Selective drying may be accomplished by scarifying or windrowing surficial material during extended periods of dry, warm weather (typically during the summer). If the soils cannot be dried back to a workable moisture condition, remedial measures may be required. General project site protection during the normal wet weather season should include of the placement of aggregate base and the protection of exposed soils during the construction phase.

4.1.2 Reuse of On Site Native Soils

If the native soils are used as structural fill, we recommend that the soils are relatively free of organic material and debris, and within ± 2 percent of the optimum moisture content. Aeration and drying of the native soils may be necessary to achieve near optimum moisture conditions.

If the native soils are stockpiled for later use as structural fill, the stockpiles should be covered to protect the soil from wet weather conditions. We recommend that a representative of Kane Environmental & Associates be on site during the excavation work to determine which soils are suitable for structural fill.

4.1.3 Imported Structural Fill

Imported structural fill material should consist of well-graded gravel or a sand and gravel mixture with a maximum grain size of 3 inches and less than 5 percent fines (material passing the U.S. Standard No. 200 Sieve). All structural fill material should be submitted for approval to the geotechnical engineer.

4.1.4 Fill Placement and Compaction Criteria

Fill soils should be placed in horizontal lifts not exceeding 10 inches loose thickness, moisture-conditioned as necessary, (moisture content of soil shall not vary by more than ±2 percent of optimum moisture) and the material should be compacted to at least 95 percent of the maximum dry density based on ASTM Test Method D1557. In place density tests should be performed on all structural fill to verify proper moisture content and adequate compaction. Additional lifts should not be placed if the previous lift did not meet the compaction requirements or if soil conditions are not considered stable. Observations of fill materials could indicate excessively wet, pumping soils which would warrant non-passing evaluation, even if the minimum compaction requirement is met.

4.1.5 Temporary Excavations

Based on our understanding of the project, we anticipate that the grading will be limited with cuts on the order of approximately 2 feet or less. However, if there are temporary cuts that will extend deeper than 4 feet, the temporary excavations should be sloped no steeper than 1H:1V (Horizontal:Vertical) in medium dense to dense native soils and 3/4H:1V (Horizontal:Vertical) in very dense native soils if encountered in deeper excavations, where room permits. If the excavation is subject to heavy vibration or surcharge loads, we recommend they be sloped no steeper than 1.5H:1V, where room permits. Temporary excavations in fill soils should be sloped no steeper than 1.5H:1V where room permits, and 2H:1V if subject to heavy vibration or surcharge loads.

All temporary cuts should be in accordance with the Washington Administrative Code (WAC) Part N, Excavation, Trenching, and Shoring. The temporary slopes should be visually inspected daily by a qualified person during construction work activities and the inspections should be documented in daily reports. The contractor is responsible for maintaining the stability of the temporary cut slopes and reducing slope erosion during construction.

The temporary cut slopes should be covered with visqueen to help reduce erosion during wet weather, and the slopes should be closely monitored until the permanent retaining systems or slope configurations are complete. Materials should not be stored or equipment operated within 10 feet of the top of any temporary cut slope.

All soil conditions may not be fully delineated during the geotechnical investigation. In the case of temporary cuts, the existing soil conditions may not be completely revealed until the excavation work exposes the soil. Typically, as excavation work progresses the maximum inclination of the temporary slopes will need to be re-evaluated by the geotechnical engineer so that supplemental recommendations can be made. Soil and groundwater conditions can be highly variable. Scheduling for soil work will need to be adjustable, to deal with unanticipated conditions, so that the project can proceed and required deadlines can be met.

If any variations or undesirable conditions are encountered during construction Kane Environmental should be notified so that supplemental recommendations can be made. If room constraints or groundwater conditions do not permit temporary slopes to be cut to the maximum angles allowed by the WAC, temporary shoring systems may be required. The contractor should be responsible for developing temporary shoring systems, if needed. We recommend that Kane Environmental, Inc. and the project structural engineer review temporary shoring designs prior to installation, to verify the suitability of the proposed systems.

4.1.6 Utility Trenches

Utility trenches should be excavated according to accepted engineering practices following OSHA (Occupational Safety and Health Administration) standards, by a contractor experienced in such work. The contractor is responsible for the safety of open trenches. Traffic and vibration adjacent to trench walls should be reduced; cyclic wetting and drying of excavation side slopes should be avoided. Depending upon the location and depth of some utility trenches, groundwater flow into open excavations could be experienced, especially during or shortly following periods of precipitation.

Sandy soils were encountered at shallow depths in the borings at this site. These soils have low cohesion and can have a tendency to cave in excavations. Although dense and very dense native soils, which generally have some cohesive strength, were encountered below the overlying medium dense materials, bedding and joint (fracture) planes in these soils may still cause caving in trench walls. Shoring or sloping back trench sidewalls may be required within these soils.

All utility trench backfill should consist of imported structural fill or suitable on-site material. Utility trench backfill placed in or adjacent to buildings and exterior slabs should be compacted to at least 95 percent of the maximum dry density based on ASTM Test Method D1557. The upper 5 feet of utility trench backfill placed in pavement areas should be compacted to at least 95 percent of the maximum dry density based on ASTM Test Method D1557. Below 5 feet, utility trench backfill in pavement areas should be compacted to at least 90 percent of the maximum dry density based on ASTM Test Method D1557. Pipe bedding should be in accordance with the pipe manufacturer's recommendations.

The contractor is responsible for removing all water-sensitive soils from the trenches regardless of the backfill location and compaction requirements. The contractor should use appropriate equipment and methods to avoid damage to the utilities and/or structures during fill placement and compaction.

4.1.7 Erosion and Sediment Control

Erosion and sediment control (ESC) measures are implemented to reduce the transportation of sediment to wetlands, streams, lakes, drainage systems, and adjacent properties. Erosion and sediment control measures should be implemented and these measures should be in general accordance with local regulations. At a minimum, the following basic recommendations should be incorporated into the design of the erosion and sediment control features of the site:

1) Phase the soil, foundation, utility, and other work, requiring excavation or the disturbance of the site soils, to take place during the dry season (generally May through September). However, provided precautions are taken using Best Management Practices (BMP's), grading activities can be undertaken during the wet season (generally October through April). It should be noted that this typically increases the overall project cost.

2) All site work should be completed and stabilized as quickly as possible.

3) Additional perimeter erosion and sediment control features may be required to reduce the possibility of sediment entering the surface water. This may include additional silt fences, silt fences with a higher Apparent Opening Size (AOS), construction of a berm, or other filtration systems.

4) Any runoff generated by dewatering discharge should be treated through construction of a sediment trap if there is sufficient space. If space is limited other filtration methods will need to be incorporated.

4.1.8 Groundwater Influence on Construction

Groundwater was encountered in B-1 at 8.5 feet and in B-2 at 6.5 feet below the existing site grades at the time of the drilling operations. Groundwater was not encountered in B-3. Regional groundwater, related to the proximity of the site to the nearby river, may be expected in excavations extending beyond 5 feet in depth depending on the location within the site.

If groundwater is encountered during construction, we should observe the conditions to determine if dewatering will be needed. Design of temporary dewatering systems to remove groundwater should be the responsibility of the contractor.

If earthwork is performed during or soon after periods of precipitation, the subgrade soils may become saturated. These soils may "pump," and the materials may not respond to densification techniques. Typical remedial measures include: discing and aerating the soil during dry, warm weather; mixing the soil with drier materials; removing and replacing the soil with an approved fill material. A qualified geotechnical engineering firm should be consulted prior to implementing remedial measures to observe the unstable subgrade conditions and provide appropriate recommendations.

4.2 FOUNDATIONS

We recommend that the proposed addition be supported on a shallow spread footing system founded on undisturbed medium dense to very dense native soils or on properly compacted structural fill placed on the medium dense to very dense native soils. If structural fill is used to support foundations, then the zone of structural fill should extend beyond the faces of the footing a distance at least equal to the thickness of the structural fill. Kane Environmental should observe the subgrade conditions prior to placing any fill or concrete to verify that any unsuitable materials have been removed.

4.2.1 Foundation Design

For shallow foundation support, we recommend widths of at least 18 and 24 inches, respectively, for continuous wall and isolated column footings supporting the proposed additions. Provided that the footings are supported as recommended above, a net allowable bearing pressure of 2,500 pounds per square foot (psf) may be used for design.

A 1/3 increase in the above value may be used for short duration loads, such as those imposed by wind and seismic events. Structural fill placed on bearing, native subgrade should be compacted to at least 95 percent of the maximum dry density based on ASTM Test Method D1557. Footing excavations should be inspected to verify that the foundations will bear on suitable material.

Exterior footings should have a minimum depth of 18 inches below pad subgrade (soil grade) or adjacent exterior grade, whichever is lower. Interior footings should have a minimum depth of 12 inches below pad subgrade (soil grade) or adjacent exterior grade, whichever is lower.

4.2.2 Foundation Settlement

If constructed as recommended, the total foundation settlement is not expected to exceed 1 inch. Differential settlement, along a 25-foot exterior wall footing, or between adjoining column footings, should be less than ½ inch. This corresponds to an angular distortion of 0.002. Most settlement is expected to occur during construction, as the loads are applied. However, additional post-construction settlement may occur if the foundation soils are flooded or saturated.

4.2.3 Lateral Resistance

Resistance to lateral footing displacement can be determined using an allowable friction factor of 0.32 acting between the bases of foundations and the supporting subgrade. Lateral resistance for footings can also be developed using an allowable equivalent fluid passive pressure of 275 pounds per cubic foot (pcf) acting against the appropriate vertical footing faces (neglect the upper 12 inches below grade in exterior areas). The allowable friction factor and allowable equivalent fluid passive pressure values include a factor of safety of 1.5. The frictional and passive resistance of the soil may be combined without reduction in determining the total lateral resistance. A 1/3 increase in the above values may be used for short duration transient loads.

4.2.4 Footing Drainage

Seasonal rainfall, run-off, and the normal practice of watering trees and landscaping areas around the proposed buildings, should not be permitted to flood and/or saturate footings. To limit the buildup of water within the footing areas, continuous footing drains (with cleanouts) should be provided at the bases of the footings. The footing drains should consist of a minimum 4-inch diameter perforated pipe, sloped to drain, with perforations placed down and enveloped by 1-inch sized washed rock in all directions and filter fabric to prevent the migration of fines.

4.3 BELOW GRADE WALLS AND RETAINING WALLS

We have developed criteria for the design of retaining or below grade walls, in case this information is required. Our design parameters are based on retention of backfill soils. The parameters are also based on a level backfill condition. Walls may be designed as "restrained" retaining walls based on "at-rest" earth pressures, plus any surcharge on top of the walls as described below, if the walls are attached to the buildings and/or movement is not acceptable. Unrestrained walls may be designed based on "active" earth pressure, if the walls are not part of the buildings and some movement of the retaining walls is acceptable. Acceptable lateral movement equal to at least 0.2 percent of the wall height would warrant the use of "active" earth pressure values for design.

4.3.1 Design Parameters

The following table, titled **Wall Design Criteria**, presents the recommended soil related design parameters for retaining walls with **level (horizontal) backfill/backslope**. Contact Kane Environmental, Inc. if an alternate retaining wall configuration is used.

Wall Design Criteria	
"At-rest" Conditions (Lateral Earth Pressure – EFD$^+$)	55 pcf (Equivalent Fluid Density)
"Active" Conditions (Lateral Earth Pressure – EFD$^+$)	35 pcf (Equivalent Fluid Density)
Seismic Increase for "At-rest" Conditions (Lateral Earth Pressure)	14H* (Uniform Distribution)
Seismic Increase for "Active" Conditions (Lateral Earth Pressure)	6H* (Uniform Distribution)
Passive Earth Pressure on Low Side of Wall (Allowable, includes F.S. = 1.5)	Neglect upper 12 inches, then 275 pcf EFD$^+$
Soil-Footing Coefficient of Sliding Friction (Allowable; includes F.S. = 1.5)	0.32

*H is the height of the wall; Increase based on one in 2,500 year seismic event (2 percent probability of being exceeded in 50 years).

+ EFD – Equivalent Fluid Density

The stated lateral earth pressures do not include the effects of hydrostatic pressure generated by water accumulation behind the retaining walls or loads imposed by construction equipment, foundations, earth backslope, rockeries above or roadways (surcharge loads).

4.3.2 Wall Drainage

To reduce the lateral earth pressure that could result from the buildup of water pressure against the walls, continuous footing drains (with cleanouts) should be provided at the bases of the walls. The footing drains should consist of a minimum 4-inch diameter perforated pipe, sloped to drain, with perforations placed down and enveloped by a minimum 6 inches of pea gravel in all directions and filter fabric to prevent the migration of fines.

The backfill adjacent to and extending a lateral distance, behind the walls, of at least 2 feet should consist of free-draining granular material. All free draining backfill should contain less than 3 percent fines (passing the U.S. Standard No. 200 Sieve) based upon the fraction passing the U.S. Standard No. 4 Sieve with at least 30 percent of the material being retained on the U.S. Standard No. 4 Sieve. It should be realized that the primary purpose of the free-draining material is the reduction of hydrostatic pressure. Some potential for the moisture to contact the back face of the wall may exist, even with treatment, which may require that more extensive waterproofing be specified for walls, which require interior moisture sensitive finishes.

4.3.3 Wall Backfill and Compaction

We recommend that the backfill be compacted to at least 95 percent of the maximum dry density based on ASTM Test Method D1557. In place density tests should be performed to verify adequate compaction. Soil compactors place transient surcharges on the backfill. Consequently, only light hand operated equipment is recommended within 3 feet of walls so that excessive stress is not imposed on the walls.

4.4 SLAB ON GRADE FLOORS

We recommend that at least 1 to 2 feet of the existing subgrade be removed in loose soil areas underlying the building floor slab sections. The over-excavated areas should be compacted and backfilled to the planned floor slab subgrade level with structural fill. Note: The overexcavated floor slab subgrade area should be compacted and proof rolled prior to structural fill placement.

In structure areas where it is desired to reduce floor dampness, such as areas covered with moisture sensitive floor coverings, we recommend that concrete slab-on-grade floors be underlain by a water vapor retarder system. The water vapor retarder system should be installed in accordance with ASTM Specification E164-94 and Standard Specifications E1745-97. According to ASTM Guidelines, the water vapor retarder should consist of a vapor retarder sheeting underlain by a minimum of 4-inches of compacted clean (less than 5 percent passing the U.S. Standard No. 200 Sieve), open-graded coarse rock of ¾-inch maximum size. The vapor retarder sheeting should be protected from puncture damage.

The exterior floor concrete should be placed separately in order to act independently of the walls and foundation system. All fills required to bring the building pads to grade should consist of structural fill.

Moisture within the structure may be derived from water vapors, which were transformed from the moisture within the soils. This moisture vapor can travel through the vapor membrane and penetrate the slab-on-grade. This moisture vapor penetration can affect floor coverings and produce mold and mildew in the structures.

To reduce moisture vapor intrusion, it is recommended that a vapor retarder be installed in accordance with ASTM guidelines. We recommend that the utility trenches within the structure be compacted as specified in our report, to reduce the transmission of moisture through the utility trench backfill. Positive drainage should be established away from the structure and should be maintained throughout the life of the structure. Ponding of water should not be allowed adjacent to the structure.

4.5 INFILTRATION

For preliminary infiltration design, we classified subsurface soils according to the United States Department of Agriculture Textural Triangle to determine suitable infiltration rates for the site soils. Our work was performed in general accordance with the guidelines in the Pierce County Stormwater Management and Site Development Manual.

The soil infiltration rates based on visual classification are presented in the following table.

INFILTRATION RATES BASED ON FIELD TESTING AND VERIFICATION THROUGH TEXTURAL ANALYSIS			
LOCATION	**TEST DEPTH (feet)**	**INFILTRATION RATE (min/inch) No Factor of Safety**	**USDA SOIL CLASSIFICATION Based on Visual Classification**
B-1	5	5	Medium Sand
B-2	2.5	15	Loamy Sand

We encountered groundwater in two of our borings at depths indicating a relatively uniform elevation of shallow groundwater at the site. This is likely due to the proximity of the site to the river located west of the property. Infiltration of stormwater at the site may be limited to within the upper 3 feet due to the shallow nature of the groundwater (approximately 6 feet below the building subgrade elevation).

At least two infiltration verification tests should be performed during or following the construction of any infiltration system. We recommend that the Pilot Infiltration Test (PIT) or single ring infiltrometer method be used to verify the infiltration rates for the project. Kane Environmental should review the final system design prior to construction. We can provide additional stormwater recommendations once a design has been finalized.

4.6 GENERAL SITE DRAINAGE

The ground surface should slope away from building pads and pavement areas, toward appropriate drop inlets or other surface drainage devices. We recommend that adjacent exterior grades be sloped a minimum of 2 percent for a minimum distance of 5 feet away from structures. Roof drains should be tightlined away from foundations. Subgrade soils in pavement areas should be sloped a minimum of 1 percent and drainage gradients maintained to carry all surface water to collection facilities and off-site. These grades should be maintained for the life of the project. The collection facilities should be tightlined away from slopes that exceed 30 percent.

4.7 PAVEMENTS

The near surface subgrade soils generally consist of silty sand with variable amounts of gravel to sand with gravel and variable amounts of silt. These soils are rated as good for pavement subgrade material. We estimate that the subgrade will have a California Bearing Ratio (CBR) value of 12 and a modulus of subgrade reaction value of k = 210 pci, provided the subgrade is prepared in general accordance with our recommendations.

We recommend that, at a minimum, 12 inches of the existing subgrade material be moisture conditioned (as necessary) and re-compacted to prepare for the construction of pavement sections. The subgrade should be compacted to at least 95 percent of the maximum dry density as determined by ASTM Test Method D1557. In place density tests should be performed to verify proper moisture content and adequate compaction. However, if the subgrade soil consists of firm and unyielding native glacial soils a proof roll of the pavement subgrade soil may be performed in lieu of re-compacting the subgrade and compaction tests. The recommended flexible and rigid pavement sections are based on design CBR and modulus of subgrade reaction (k) values that are achieved, only following proper subgrade preparation. It should be noted that subgrade soils that have relatively high silt contents may be highly sensitive to moisture conditions. The subgrade strength and performance characteristics of a silty subgrade material may be dramatically reduced if this material becomes wet.

Traffic loads were not provided, however, based on our knowledge of the proposed project, we expect the traffic to range from light duty (passenger automobiles) to heavy duty (fire trucks). The following tables show the recommended pavement sections for light duty and heavy duty use.

ASPHALTIC CONCRETE (FLEXIBLE) PAVEMENT

LIGHT DUTY

Asphaltic Concrete	Aggregate Base*	Compacted Subgrade* **
2.0 in.	6.0 in.	12.0 in.

** 95% compaction based on ASTM Test Method D1557*
*** A proof roll may be performed in lieu of in place density tests*

HEAVY DUTY

Asphaltic Concrete	Aggregate Base*	Compacted Subgrade* **
4.0 in.	6.0 in.	12.0 in.

** 95% compaction based on ASTM Test Method D1557*
*** A proof roll may be performed in lieu of in place density tests*

PORTLAND CEMENT CONCRETE (RIGID) PAVEMENT

Min. PCC Depth	Aggregate Base*	Compacted Subgrade* **
5.0 in.	6.0 in.	12.0 in.

** 95% compaction based on ASTM Test Method D1557*
*** A proof roll may be performed in lieu of in place density tests*

The asphaltic concrete depth in the flexible pavement tables should be a surface course type asphalt, such as Washington Department of Transportation (WSDOT) ½ inch HMA. The rigid pavement design is based on a Portland Cement Concrete (PCC) mix that has a 28 day compressive strength of 4,000 pounds per square inch (psi). The design is also based on a concrete flexural strength or modulus of rupture of 550 psi.

4.8 Testing and Inspection

A representative of Kane Environmental, Inc. should be present at the site during the earthwork activities to confirm that actual subsurface conditions are consistent with the fieldwork. This activity is an integral part of our services as acceptance of earthwork construction is dependent upon observation and testing processes of grading and excavation activities. This representative can also verify that the intent of these recommendations is incorporated into the project design and construction. Kane Environmental, Inc. will not be responsible for grades or staking, since this is the responsibility of the Prime Contractor. Furthermore, Kane Environmental, Inc. is not responsible for the contractor's procedures, methods, scheduling or management of the work site.

5.0 LIMITATIONS

Geotechnical engineering is one of the newest divisions of Civil Engineering. This branch of Civil Engineering is constantly improving as new technologies and understanding of earth sciences improves. Although your site was analyzed using the most appropriate current techniques and methods, undoubtedly there will be substantial future improvements in this branch of engineering. In addition to improvements in the field of geotechnical engineering, physical changes in the site either due to excavation or fill placement, new agency regulations or possible changes in the proposed structure after the time of completion of the soils report may require the soils report to be professionally reviewed. In light of this, the owner should be aware that there is a practical limit to the usefulness of this report without critical review. Although the time limit for this review is strictly arbitrary, it is suggested that two years be considered a reasonable time for the usefulness of this report.

Foundation and earthwork construction is characterized by the presence of a calculated risk that soil and groundwater conditions have been fully revealed by the original foundation investigation. This risk is derived from the practical necessity of basing interpretations and design conclusions on limited sampling of the earth. Our report, design conclusions and interpretations should not be construed as a warranty of the subsurface conditions. Actual subsurface conditions may differ, sometimes significantly, from those indicated in this report. The recommendations made in this report are based on the assumption that soil conditions do not vary significantly from those disclosed during our field investigation. The findings and conclusions of this report can be affected by the passage of time, such as seasonal weather conditions, manmade influences, such as construction on or adjacent to the site, natural events such as earthquakes, slope instability, flooding, or groundwater fluctuations. If any variations or undesirable conditions are encountered during construction, the geotechnical engineer should be notified so that supplemental recommendations can be made.

The conclusions of this report are based on the information provided regarding the proposed construction. If the proposed construction is relocated or redesigned, the conclusions in this report may not be valid. The geotechnical engineer should be notified of any changes so that the recommendations can be reviewed and reevaluated.

Misinterpretations of this report by other design team members can result in project delays and cost overruns. These risks can be reduced by having Kane Environmental, Inc. involved with the design teams meetings and discussions after submitting the report. Kane Environmental, Inc. should also be retained for reviewing pertinent elements of the design team's plans and specifications. Contractors can also misinterpret this report. To reduce this, risk Kane Environmental, Inc. should participate in pre-bid and preconstruction meetings, and provide construction observations during the site work.

This report is a geotechnical engineering investigation with the purpose of evaluating the soil conditions in terms of foundation design. The scope of our services did not include any environmental site assessment for the presence or absence of hazardous and/or toxic materials in the soil, groundwater or atmosphere, or the presence of wetlands. Any statements, or absence of statements, in this report or on any boring log regarding odors, unusual or suspicious items, or conditions observed are strictly for descriptive purposes and are not intended to convey engineering judgment regarding potential hazardous and/or toxic assessments.

The geotechnical information presented herein is based upon professional interpretation utilizing standard engineering practices and a degree of conservatism deemed proper for this project. It is not warranted that such information and interpretation cannot be superseded by future geotechnical developments. We emphasize that this report is valid for this project as outlined above, and should not be used for any other site. Our report is prepared for the exclusive use of our client. No other party may rely on the product of our services unless we agree in advance to such reliance in writing.

If you have any questions, or if we may be of further assistance, please do not hesitate to contact our office at (206) 691-0476.

6.0 REFERENCES

U.S. Department of Agriculture, Soil Conservation Service, "Soil Survey of Pierce County"

Washington State Department of Transportation (WSDOT), "Standard Specifications for Road, Bridge and Municipal Construction"

International Code Council, "International Building Code", 2006

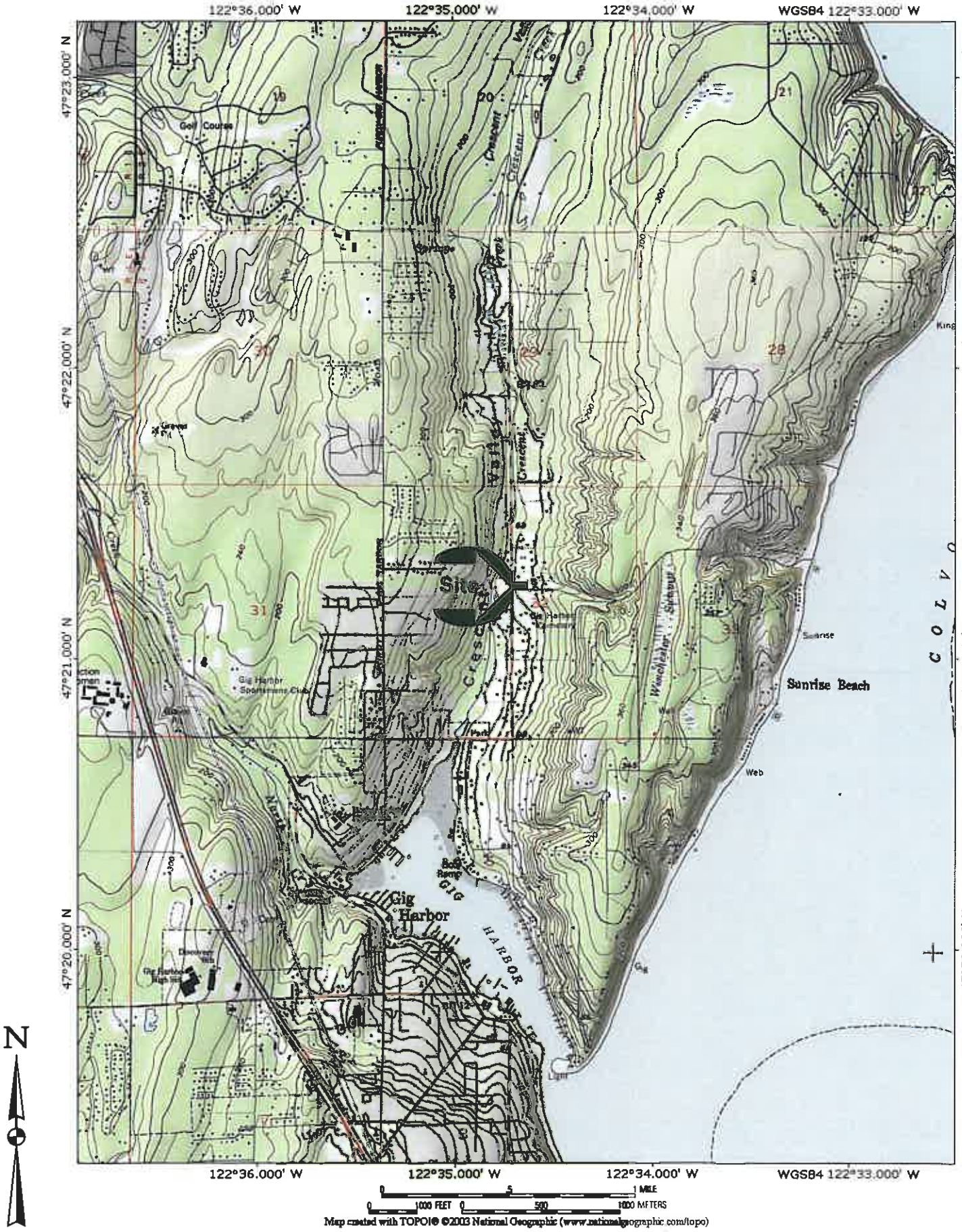

KANE ENVIRONMENTAL INC

Proposed Fire Station 5-7 Addition
Gig Harbor, Washington

4/12/10	By: PH	Source: Topo 2003;

Figure 1
Vicinity Map

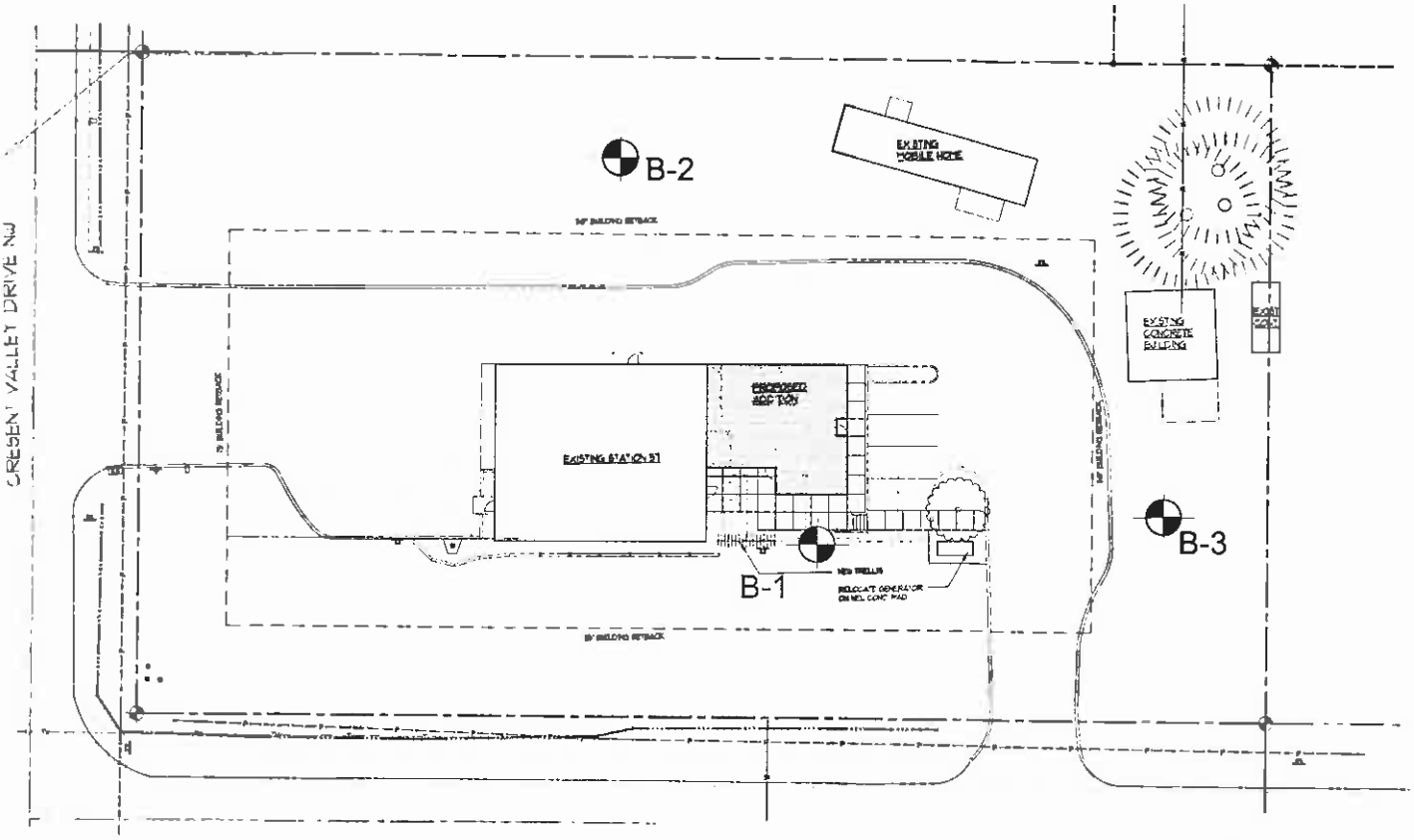

N

LEGEND

B-1 Approximate Boring Location

Not to Scale

KANE ENVIRONMENTAL INC	Fire Station 5-7 - Proposed Addition Gig Harbor, Washington			Figure 2 Site Plan
	3/28/10	By: PH	Source: RFM Site Plan 3/10/10	

Appendix A

Boring Logs

APPENDIX A

FIELD INVESTIGATION

Field Investigation

The field investigation consisted of drilling and sampling three (3) exploratory borings that generally covered the proposed site to be developed was completed to evaluate the shallow subsurface soil and groundwater conditions. The exploratory borings reached depths of approximately 6.5 to 9 feet below the existing site grades.

The approximate exploratory boring locations are shown on the site plan (Figure 2). The depths shown on the attached boring logs are from the existing ground surface at the time the borings were drilled.

The soils encountered were logged in the field during the exploration and, with supplementary laboratory test data, are described in accordance with the Unified Soil Classification System (USCS).

The drilled exploratory borings were advanced using a limited access drill rig. Disturbed soil samples were obtained by using the Standard Penetration Test (SPT) as described in ASTM:D-1586. The Standard Penetration Test and sampling method consists of driving a standard 2-inch outside-diameter, split barrel sampler into the subsoil with a 140-pound hammer free falling a vertical distance of 30 inches. The summation of hammer-blows required to drive the sampler the final 12-inches of an 18-inch sample interval is defined as the Standard Penetration Resistance, or N-value. The blow count is presented graphically on the boring logs in this appendix. The resistance, or "N" value, provides a measure of the relative density of granular soils or of the relative consistency of cohesive soils.

All samples were returned to our office for evaluation. The logs of the borings are presented in this appendix.

SOIL CLASSIFICATION CHART

MAJOR DIVISIONS			SYMBOLS GRAPHIC	SYMBOLS LETTER	TYPICAL DESCRIPTIONS
COARSE GRAINED SOILS MORE THAN 50% RETAINED ON #200 SIEVE	GRAVEL AND GRAVELLY SOILS MORE THAN 50% OF COARSE FRACTION RETAINED ON #4 SIEVE	CLEAN GRAVELS <5% PASSING THE #200 SIEVE		GW	WELL-GRADED GRAVELS, GRAVEL-SAND MIXTURES
				GP	POORLY-GRADED GRAVELS, GRAVEL-SAND MIXTURES
		GRAVELS WITH FINES >12% PASSING THE #200 SIEVE		GM	SILTY GRAVELS, GRAVEL-SAND-SILT MIXTURES
				GC	CLAYEY GRAVELS, GRAVEL-SAND-CLAY MIXTURES
	SAND AND SANDY SOILS MORE THAN 50% OF COARSE FRACTION PASSING #4 SIEVE	CLEAN SANDS <5% PASSING THE #200 SIEVE		SW	WELL-GRADED SANDS, GRAVELLY SANDS
				SP	POORLY-GRADED SANDS, GRAVELLY SANDS
		SANDS WITH FINES >12% PASSING THE #200 SIEVE		SM	SILTY-SANDS, SAND-SILT MIXTURES
				SC	CLAYEY SANDS, SAND-CLAY MIXTURES
FINE GRAINED SOILS MORE THAN 50% PASSING #200 SIEVE	SILTS AND CLAYS LIQUID LIMIT <50	INORGANIC		ML	INORGANIC SILTS, ROCK FLOUR, CLAYEY SILTS WITH SLIGHT PLASTICITY
				CL	INORGANIC CLAYS OF LOW TO MEDIUM PLASTICITY, GRAVELLY CLAYS, SANDY CLAYS, SILTY CLAYS, LEAN CLAYS
		ORGANIC		OL	ORGANIC SILTS AND ORGANIC SILTY CLAYS OF LOW PLASTICITY
	SILTS AND CLAYS LIQUID LIMIT >50	INORGANIC		MH	INORGANIC SILTS, MICACEOUS OR DIATOMACEOUS SILTY SOILS
				CH	INORGANIC CLAYS OF HIGH PLASTICITY
		ORGANIC		OH	ORGANIC CLAYS AND SILTS OF MEDIUM TO HIGH PLASTICITY
HIGHLY ORGANIC SOILS				PT	PEAT, HUMMUS, SOILS WITH HIGH ORGANIC CONTENTS

OTHER SYMBOLS

FINAL GROUNDWATER LEVEL

INITIALLY OBSERVED GROUNDWATER LEVEL

	CR	CRUSHED ROCK, QUARRY SPALLS
	TS	TOPSOIL, FOREST DUFF, VEGETATION
	AC	ASPHALT CONCRETE
	CC	CEMENT CONCRETE

KANE ENVIRONMENTAL INC

Unified Soil Classification Chart & Other Exploration Log Symbols

Figure A2

Log of Boring B-1

Date: March 22, 2010	Depth: 9'	Initial Groundwater: 8.5'
Contractor: CN Drilling	Elevation: N/A	Sample Type: Split Spoon
Method: Hollow Stem Auger	Logged By: Phil Haberman	Final Groundwater: 8.5'

Depth (Feet)	Interval	Recovery (In.)	Blows/Ft. (N)	Graphic Log	Group Symbol	Material Description
		12				Grass and Topsoil
			18		SM	Medium dense, very fine to fine grained sand (with gravel), yellowish brown, moist. (Weathered Outwash)
2		14				
			20		SP	Medium dense, fine to medium grained sand (with gravel), yellowish brown to grayish brown, moist. (Outwash)
4		12				
6			28			
		12				
8			28			
						End of Boring 9 Feet
10						

Groundwater

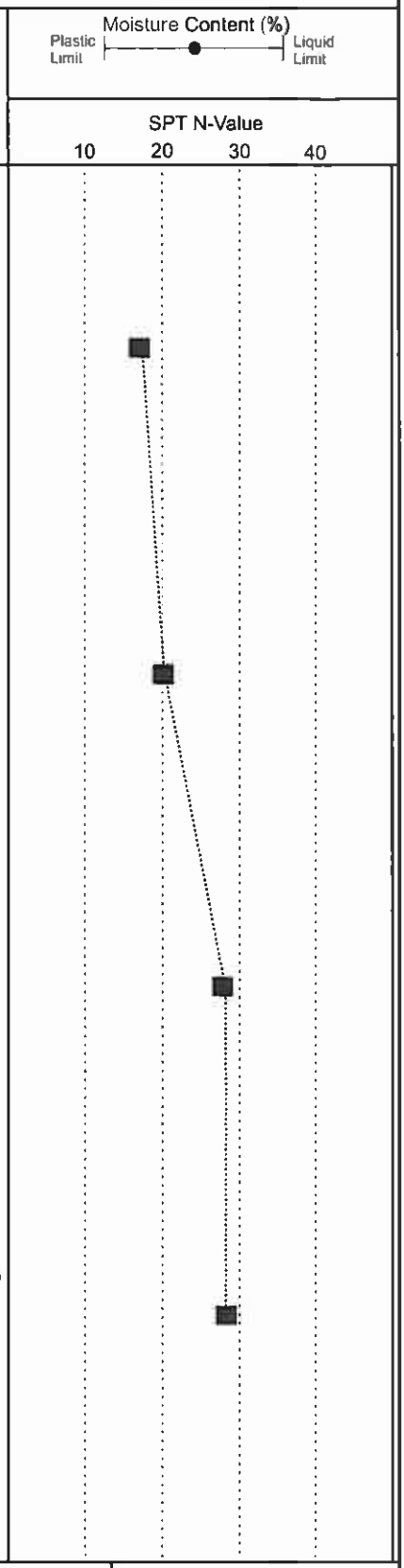

KANE ENVIRONMENTAL INC

Fire Station 5-7
Gig Harbor, Washington

Figure A3

Log of Boring B-2

Date: March 22, 2010	Depth: 9'	Initial Groundwater: 6.5'
Contractor: CN Drilling	Elevation: N/A	Sample Type: Split Spoon
Method: Hollow Stem Auger	Logged By: Phil Haberman	Final Groundwater: 6.5'

Depth (Feet)	Interval	Recovery (In.)	Blows/Ft. (N)	Graphic Log	Group Symbol	Material Description
		6				Grass and Topsoil
			7		SM	Loose to medium dense, very fine to fine grained sand (with gravel), yellowish brown, moist. (Weathered Outwash)
2		10	12			
4						
		12	15		SP	Medium dense to very dense, fine to medium grained sand (with gravel), yellowish brown to grayish brown, moist. (Outwash)
6						
		14	60			
8						
						End of Boring 9 Feet
10						

Groundwater

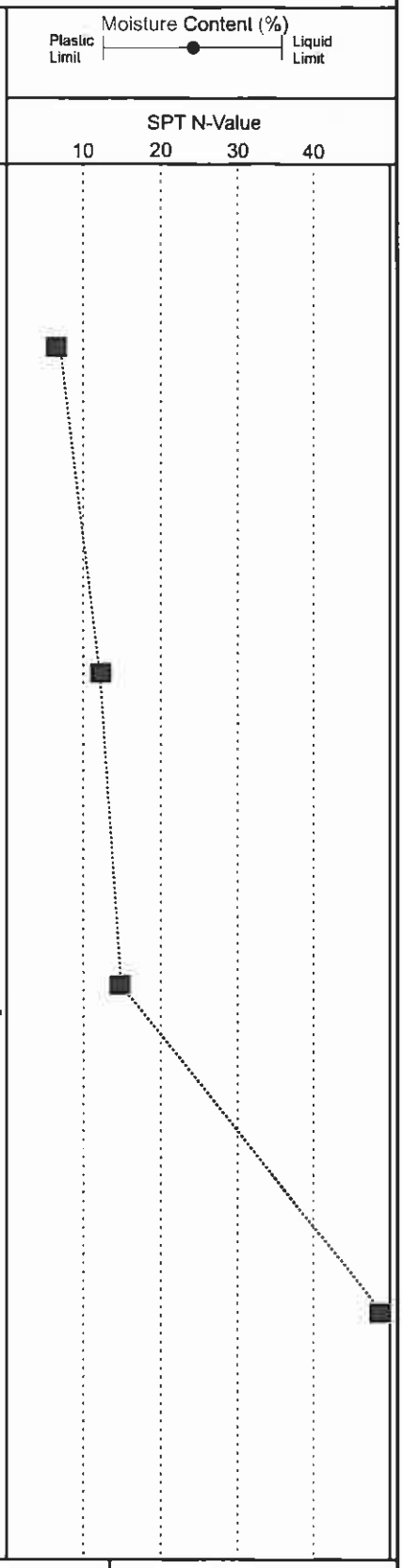

KANE ENVIRONMENTAL INC

Fire Station 5-7
Gig Harbor, Washington

Figure A4

Log of Boring B-3

Date: March 22, 2010	Depth: 6.5'	Initial Groundwater: N/A
Contractor: CN Drilling	Elevation: N/A	Sample Type: Split Spoon
Method: Hollow Stem Auger	Logged By: Phil Haberman	Final Groundwater: N/A

Depth (Feet)	Interval	Recovery (In.)	Blows/Ft. (N)	Graphic Log	Group Symbol	Material Description	Groundwater
		9				Grass and Topsoil	
			10		SM	Medium dense, very fine to fine grained sand (with gravel), yellowish brown, moist. (Weathered Outwash)	
2		10	16				
4		16	24		SP	Medium dense, fine to medium grained sand (with gravel), yellowish brown to grayish brown, moist. (Outwash)	
6							
						End of Boring 6.5 Feet	
8							
10							

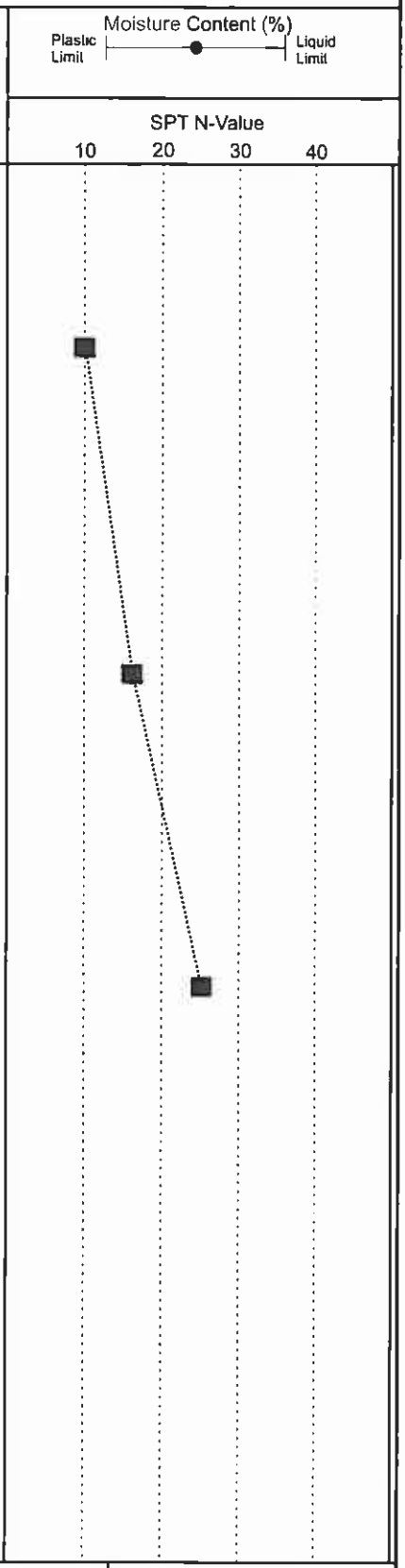

KANE ENVIRONMENTAL INC

Fire Station 5-7
Gig Harbor, Washington

Figure A5

Approved by
Steve Hupper for PPW
Development
Engineering
10/06/23

Construction Stormwater Pollution Prevention Plan

Gig Harbor Fire & Medic One Station 57
Gig Harbor, WA

July 5, 2023

PREPARED FOR:
Gig Harbor Fire & Medic One
Pierce County Fire District 5
Contact: John Johnson
Phone: (253) 851-3111

OWNER:
Gig Harbor Fire & Medic One
Pierce County Fire District 5
10222 Bujacich Rd NW
Gig Harbor, WA 98332

ARCHITECT:
Rice Fergus Miller
275 5th St, Ste. 100
Bremerton, WA 98337

MacKay Sposito
Project Number: 18017

Prepared by:
Elise Steffen

MacKay Sposito
Federal Way Office
33810 Weyerhaeuser Way South, Suite 130• Federal Way, WA 98001
253.205.8700 • info@mackaysposito.com

This page intentionally left blank.

Construction Stormwater Pollution Prevention Plan (SWPPP)

FOR:
Gig Harbor Fire & Medic One Station 57

PREPARED FOR:
Gig Harbor Fire & Medic One
Pierce County Fire District 5
Contact: John Johnson
Phone: (253) 851-3111

OWNER:
Gig Harbor Fire & Medic One
Pierce County Fire District 5
10222 Bujacich Rd NW
Gig Harbor, WA 98332

PROJECT SITE LOCATION:
Quarter 1, Section 32, Township 22 North, Range 02 East, Willamette Meridian,
Pierce County, Washington

EROSION AND SEDIMENT CONTROL INSPECTOR:
To Be Determined

SWPPP PREPARED BY:
Eric Pilcher, PE
MacKay Sposito
33810 Weyerhaeuser Way S, Ste. 130
Federal Way, WA 98001
(253) 205-8700

SWPPP PREPARATION DATE:
July 5, 2023

APPROXIMATE PROJECT CONSTRUCTION DATES:
December 2023 through November 2024

This page intentionally left blank.

Project Engineer's Certification:

"I hereby state that this Construction Stormwater Pollution Prevention Plan for Gig Harbor Fire & Medic One Station 57 has been prepared by me or under my supervision and meets the standard of care and expertise which is usual and customary in this community for professional engineers. I understand that Pierce County does not and will not assume liability for the sufficiency, suitability, or performance of Construction SWPPP BMPs prepared by me."

This page intentionally left blank.

Table of Contents

1.0 PROPOSED PROJECT DESCRIPTION 9
2.0 EXISTING CONDITIONS 9
Critical Areas 10
3.0 THIRTEEN ELEMENTS 13
Element #1: Preserve Vegetation/Mark Clearing Limits 13
Element #2: Establish Construction Access 13
Element #3: Control Flow Rates 13
Element #4: Install Sediment Controls 13
Element #5: Stabilize Soils 13
Element #6: Protect Slopes 14
Element #7: Protect Drain Inlets 15
Element #8: Stabilize Channels and Outlets 15
Element #9: Control Pollutants 15
Element #10: Control Dewatering 16
Element #11: Maintain BMPs 16
Element #12: Manage the Project 17
Element #13: Protect Low Impact Development BMPs 18
4.0 CONCLUSION 19
5.0 REFERENCES 19

List of Figures

Figure 1: Vicinity Map 11
Figure 2: Existing Conditions Plan 23
Figure 3: Soils Map 25
Figure 4: Clearing & Erosion Control Plan 27
Figure 5: Erosion Control Notes & Details 29

List of Appendices

Appendix A Figures 21

This page intentionally left blank.

1.0 PROPOSED PROJECT DESCRIPTION

The project is located on parcel number 0222325001, Section 32, Township 22 North, Range 02 East, Quarter 1, Willamette Meridian. The site address is 10521 Crescent Valley Dr NW, Gig Harbor, Washington. The site contains 1.37 acres of land. See Figure 1: Vicinity Map. A field survey was prepared by MacKay Sposito, Inc. in March 2023.

Proposed site improvements include 872 square feet of building additions, 3,702 square feet of permeable concrete paving, and 339 square feet of miscellaneous concrete. Total new plus replaced hard surface area is 4,913 square feet, resulting in a net increase of 3,388 square feet of new hard surface over existing conditions. The total disturbed area is expected to be approximately 0.20 acres. New stormwater conveyance elements will be installed to collect and convey runoff from new roof areas, and the existing infiltration trench will be relocated. Earthwork activities associated with the proposed improvements are expected to require 120 cubic yards of excavated cut and 35 cubic yards of fill. Any surplus of excavated material will be removed from the site. The source of import material is not yet determined.

Under proposed conditions, the existing infiltration trench to the north of the fire station building will be relocated and runoff from new and existing roof areas will be routed to it. New hard surface paving will be permeable concrete to match the existing paving.

2.0 EXISTING CONDITIONS

The site contains an existing 4,213 square foot fire station building, a 652 square foot shed, 11,230 square feet of permeable concrete, and 1,309 square feet of miscellaneous concrete. The total existing on-site hard surface area is 17,404 square feet, which accounts for 29.2 percent of the site. There are several existing trees on the site, primarily located along the southern property line. The site contains two septic drain fields; the primary drain field is located to the north of the fire station building and the secondary drain field is located to the south of the fire station building.

The project site is bounded to the north and east by single-family residential development. The site is bounded to the west by the public road Crescent Valley Dr NW and to the south by the public road Drummond Dr NW. On the opposite sides of both roads is more single-family residential development.

The topography of the project site is generally flat to moderately sloped and drains across the site from east to west. There are a few isolated areas within the site with steep slopes ranging between 20 and 40 percent. The high point within the site is approximately 96.0 feet and is located along the eastern project boundary. The low point within the site is approximately 77.0 feet and is located along the western project boundary on the north side of the driveway entrance.

Kane Environmental Inc. (Kane) performed subsurface field investigations on the project site and prepared a Geotechnical Report for the project in 2010. Cobalt Geosciences, LLC (Cobalt) reviewed the Kane report and prepared an amendment to the Geotechnical Report in 2023. The Kane Geotechnical Report as amended by Cobalt is submitted alongside this report. According to the geotechnical investigations, soils within the project site are outwash with measured infiltration rates of 5 to 15 minutes per inch (4 to 12 inches per hour). Groundwater was encountered in two borings at depths of 6.5 and 8.5 feet below grade.

The site may receive some offsite flows from the parcel to the east, but the area immediately adjacent to the project site is covered in dense vegetation and flows are anticipated to be minimal. There are no known drainage problems on or near the project site.

Critical Areas

Pierce County GIS identifies the following critical or potential critical areas on and near the project site:

Potential Landslide Hazard Area
A potential Landslide Hazard Area was identified by Pierce County GIS near the southeast corner of the parcel and extending offsite to the south and east. No landslide hazard areas were identified within the project site during the geotechnical investigations.

Potential Wetland Review
The eastern portion of the site was identified as needing a potential Wetland Review by Pierce County GIS. No wetlands have been identified within the project site.[1]

In addition, Crescent Creek is located approximately 350 feet to the northwest of the project site, but the site is not within a 100-year floodplain (per FEMA FIRM Panel No. 53053 C0127 E, eff. 03/07/2017) and the creek is approximately 30 feet lower than the project site.

[1] A Customer Information Meeting was held for this project on January 24, 2023. Pierce County Biologist Scott Sissons attended the meeting and provided the following feedback through the online permit site: "In accordance with Review Waiver Allowance 18E.20.035B wetland review will not be required. There are no regulated fish and wildlife species or conservation areas mapped on this parcel. Therefore these reviews will not be required." See Pierce County Application No. 1003562.

FILE: J:\18017 - GHFMO STATION 57\500 DESIGN\501 DOCUMENTS\REPORTS AND MEMOS\ABRV DRAINAGE REPORT\APP A FIGURES\CAD\FIG 1 - VICINITY MAP.DWG

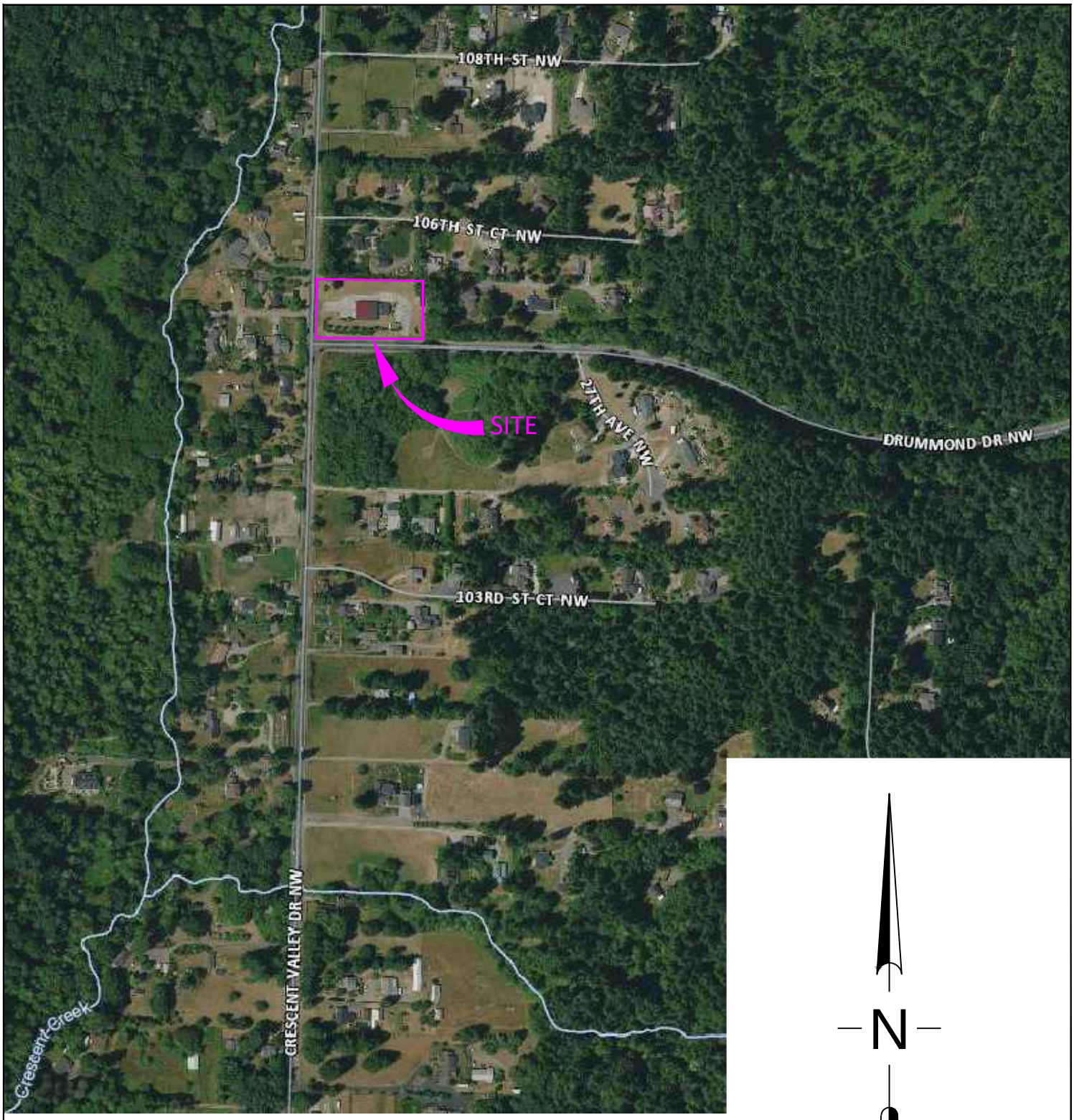

N

0 400 800

SCALE: 1" = 400'

MacKay Sposito

33810 WEYERHAEUSER WAY S, SUITE 130
FEDERAL WAY, WA 98001
PHONE (253) 205-8700
www.mackaysposito.com

STATION 57 ADDITION - GIG HARBOUR FIRE AND MEDIC ONE

VICINITY MAP

FIG. 1

This page intentionally left blank.

3.0 THIRTEEN ELEMENTS

The following are standard elements of the Construction SWPPP addressed as relevant to the work to be performed. More information on listed BMPs is available in Appendix B.

Element #1: Preserve Vegetation/Mark Clearing Limits

Natural vegetation outside of the limit of work shall remain protected during all construction (BMP C101). The limit of work shall be marked with a High Visibility Plastic Fence (BMP C103). A Silt Fence (BMP C233) shall be provided in areas of fill to reduce the possibility of sediment flowing offsite during construction. See Figure 4 and Figure 5 for TESC Plans and Details. High visibility silt fence may be used in place of high visibility fence, provided it meets the criteria for both purposes.

Best Management Practices (BMPs) to be deployed include:

- BMP C101: Preserving Natural Vegetation
- BMP C103: High Visibility Fence
- BMP C233: Silt Fence

Element #2: Establish Construction Access

The site will be accessed via the existing paved driveways on Crescent Valley Dr NW and Drummond Dr NW. No BMPs are anticipated to be necessary; rather, street sweepers will be used as needed to minimize tracking of sediment onto the adjacent roadways.

Element #3: Control Flow Rates

The disturbed area for this project is approximately 0.20 acres and the slopes within the project site are gentle, so runoff flow rates from the disturbed areas are anticipated to be minimal. Silt Fence (BMP C233) shall be provided in areas of fill to reduce the possibility of sediment flowing offsite during construction. Wattles (BMP C235) may also be used.

BMPs to be deployed include:

- BMP C233: Silt Fence
- BMP C235: Wattles

Element #4: Install Sediment Controls

Sediment control will be provided by protecting the clearing limits in areas of fill with Silt Fences (BMP C233) to the limit the flow of sediment into the surrounding areas. Wattles (BMP C235) may also be used.

BMPs to be deployed include:

- BMP C233: Silt Fence
- BMP C235: Wattles

Element #5: Stabilize Soils

Exposed soils shall be stabilized by hydroseeding and/or plastic covering in areas where soil is stockpiled, left uncompacted, or left unworked on for a specific number of days depending on the time of year (see below). Soil stabilization measures shall be appropriate for the time of year, site conditions, estimated duration of use, and potential impacts that stabilization agents may have on downstream water and/or groundwater quality. Soil stockpiles shall be stabilized from erosion, protected with

sediment trap measures, and when possible, be located away from storm drain inlets, waterways and drainage channels.

Contractors shall install the bedding materials, roadbeds, structures, pipelines or utilities and re-stabilize the disturbed soils so that:

- From October 1 through April 30, no soils shall remain exposed and unworked for more than 2 days.
- From May 1 through September 30, no soils shall remain exposed and unworked for more than 7 days.

The condition applies to all soils on site, whether at final grade or not. If the site is left unworked for more than the days and times shown above, then Plastic Covering (BMP C123) will be used to cover exposed soils. Soils shall be stabilized at the end of the shift before a holiday or weekend if needed based on the weather forecast. The contractor is responsible for identifying when this may occur and implementing the proper techniques.

Permanent erosion control is not fully established until pavement or asphalt, quarry spalls used as ditch lining, application of thick layers of gravel or mulch, or vegetative cover is in place in a manner that will fully prevent soil erosion. Fully established erosion prevention requires approximately 90% of the site to be covered in one or more of the above-mentioned remedies. All temporary control measures shall remain in place until permanent measures are established.

BMPs to be deployed include:

- BMP C120: Temporary and Permanent Seeding
- BMP C121: Mulching
- BMP C123: Plastic Covering
- BMP C125: Topsoiling/Composting
- BMP C130: Surface Roughening
- BMP C140: Dust Control

Element #6: Protect Slopes

The site is mostly flat with few gentle to moderate slopes. All slopes are designed at 2H:1V slopes or flatter. Velocities produced from slopes will be minimal.

Excavated material shall be placed on the uphill side of trenches, consistent with safety and space considerations. Check dams shall be placed at regular intervals within channels that are cut down a slope, and rock linings will be employed as necessary.

Suggested BMPs:

- BMP C120: Temporary and Permanent Seeding
- BMP C121: Mulching
- BMP C123: Plastic Covering
- BMP C130: Surface Roughening

Element #7: Protect Drain Inlets

All existing storm drain inlets to remain within and immediately downstream of the construction area and new storm drain inlets made operable during construction shall be protected using Storm Drain Inlet Protection (BMP C220) so that stormwater runoff does not enter the conveyance system without first being filtered or treated to remove sediment. Inlets shall be inspected weekly at a minimum and daily during storm events. Inlet protection devices shall be cleaned or removed and replaced when sediment has filled one-third of the available storage (may vary based on manufacturer).

All approach roads shall be kept clean using construction entrances (see Element #2). If the construction entrance is not providing adequate sediment removal, a wheel wash shall be implemented. This shall be determined by the contractor in coordination with the developer and engineer.

BMPs to be deployed include:

- BMP C220: Storm Drain Inlet Protection

Element #8: Stabilize Channels and Outlets

No direct discharges to swales are planned, and therefore no BMPs are believed to be necessary. However, downstream discharge points shall be monitored after heavy rain events and additional BMPs shall be deployed if deemed necessary by the contractor, engineer, or owner.

Element #9: Control Pollutants

All pollutants, including waste material and demolition debris, that occur onsite shall be handled and disposed of in a manner that does not cause contamination of stormwater. Woody debris may be chopped and spread on site. The project site does not propose the use of any chemicals, liquid products, petroleum products, or any other materials that have the potential to pose a threat to human health or the environment. There are no onsite fueling tanks within the project area. Additionally, the project site does not propose any application of agricultural chemicals, including fertilizer and/or pesticides.

The project does not propose any maintenance and repair of heavy equipment and vehicles involving oil changes, hydraulic system drain down, solvent and de-greasing cleaning operation, fuel tank drain down and removal, and/or any other activities which may result in discharge or spillage of pollutants to the ground or into stormwater runoff. Emergency repairs may be performed on site using temporary plastic placed beneath and, if raining, over the vehicle.

Wheel wash or tire bath wastewater shall be discharged to a separate onsite treatment system or to the sanitary sewer. The site does not propose the use of a wheel wash unless the contractor finds it necessary. If a wheel wash is installed, coordination with Pierce County Environmental Services shall be required prior to installation.

BMPs shall be used to prevent or treat contamination of stormwater runoff by pH modifying sources including, but not limited to: bulk cement, cement kiln dust, fly ash, new concrete washing and curing waters, waste streams generated from concrete grinding and sawing, exposed aggregate processes, and concrete pumping and mixer washout waters. Stormwater discharge shall not cause or contribute to a violation of the water quality standard for pH in the receiving water.

Construction sites shall adjust pH of stormwater if necessary to prevent violation of water quality standards. Project must obtain written approval from the Department of Ecology prior to using chemical treatment other than CO_2 or dry ice to adjust pH.

BMPs to be deployed include:

- BMP C151: Concrete Handling
- BMP C152: Sawcutting and Surfacing Pollution Prevention
- BMP C153: Material Delivery, Storage and Containment
- BMP C154: Concrete Washout Area

Element #10: Control Dewatering

If necessary, dewatering water may be controlled by one or more of the following options:

- Dewatering water with similar characteristics to stormwater runoff at the site may be discharged into a controlled conveyance system prior to discharge to a sediment trap or sediment pond.
- Clean, non-turbid dewatering water may be discharged to a system tributary to state surface waters, as specified in Element #8, provided the dewatering flow does not cause erosion or flooding of receiving waters. These clean waters should not be routed through stormwater sediment pond.
- Highly turbid or contaminated dewatering water from construction equipment operation, clamshell digging, concrete tremie pour, or work inside a cofferdam, shall be handled separately from stormwater.
- Other disposal options, depending on site constraints, may include:
    - Infiltration
    - Transport offsite in a vehicle, such as a vacuum flush truck, for legal disposal in a manner that does not pollute state waters
    - Ecology-approved onsite chemical treatment or other suitable treatment technologies
    - Sanitary sewer discharge with local sewer district approval, if there is no other option
    - Use of a sedimentation bag with outfall to ditch or swale for small volumes of localized dewatering

Element #11: Maintain BMPs

All temporary and permanent erosion and sediment control BMPs shall be maintained and repaired, as needed, to assure continued performance of their intended function in accordance with each BMP's specifications (see Appendix B).

Visual monitoring of all BMPs installed at the site will be conducted at least once every calendar week and within 24 hours of any stormwater or non-stormwater discharge from the site. If the site becomes inactive and is temporarily stabilized, the inspection frequency may be reduced to once every calendar month.

All temporary erosion and sediment control BMPs shall be removed within 30 days after achieving final site stabilization, or after the temporary BMP is no longer needed.

Trapped sediment shall be removed or stabilized on site. Disturbed soil resulting from removal of BMPs or vegetation shall be permanently stabilized.

BMPs to be deployed include:

- BMP C150: Materials on Hand

Element #12: Manage the Project

This project is expected to be completed in a single phase. Revegetation of exposed areas and maintenance of that vegetation shall be an integral part of the clearing and grading activities.

Less than 1 acre of total area will be disturbed, therefore site inspections may be conducted by a Certified Erosion and Sediment Control Lead (CESCL) or other inspector without CESCL certification who has the skills to assess the site conditions and construction activities that could impact the quality of stormwater and to assess the effectiveness of Construction SWPPP measures used to control the quality of stormwater discharges. The inspector shall:

- Examine stormwater visually for the presence of suspended sediment, turbidity, discoloration, and oil sheen.
- Evaluate the effectiveness of BMPs and determine if it is necessary to install, maintain, or repair BMPs to improve the quality of stormwater discharges.
- Review the SWPPP for compliance with the 12 construction SWPPP elements and make appropriate revisions within 7 days of an inspection, if necessary.
- Immediately begin the process of fully implementing and maintaining appropriate source control and/or treatment BMPs as soon as possible, addressing the problems no later than within 10 days of an inspection, when necessary. If installation of necessary treatment BMPs is not feasible within 10 days, the inspector may request an extension within the initial 10-day response period.
- Document BMP implementation and maintenance in the site log book (see Appendix C).
- Inspect all areas disturbed by construction activities, all BMPs, and all stormwater discharge points at least once every calendar week and within 24 hours of any discharge from the site. The inspector may reduce the inspection frequency for temporary stabilized, inactive sites to once every calendar month during the dry season.

Clearing and grading activities for developments shall be permitted only if conducted pursuant to an approved site development plan that establishes permitted area of clearing, grading, cutting, and filling. When the permitted clearing and grading areas are established, consideration shall be given to minimizing removal of existing trees and minimizing disturbance/compaction of native soils except as needed for construction purposes. Critical or sensitive areas, buffers, native growth protection easements, and/or tree detention areas as may be required by local jurisdiction, shall be delineated prior to land disturbance.

Seasonal Work Limitations:

- From October 1 through April 30, clearing, grading, and other soil disturbing activities shall only be permitted if shown on the satisfaction of the county that silt-laden runoff will be prevented from leaving the site through a combination of the following:
    - Site conditions including existing vegetative coverage, slope, soil type, and proximity to receiving waters.

    - Limitations on activities and the extent of disturbed areas.
    - Proposed ESC measures.
- Based on the information provided and/or local weather conditions, the county may expand or restrict the seasonal limitation of onsite disturbance. The county will take enforcement action – such as a notice of violation, administrative order, penalty, or stop-work order under the following circumstances:
    - If, during the course of any construction activity or soil disturbance during seasonal limitation period, sediment leaves the construction site causing a violation of the surface water quality standard.
    - If clearing and grading limits or ESC measures shown in the approved plan are not maintained.
- The following activities are exempt from the seasonal clearing and grading limitations:
    - Routine maintenance and necessary repair of ESC BMPs
    - Routine maintenance of public facilities or existing utility structures that do not expose the soil or result in the removal of vegetative cover to soil
    - Activities where there is 100 percent infiltration of surface water runoff within the site in approved and installed ESC facilities.

The primary project applicant shall evaluate, with input from utilities and other contractors, the stormwater management requirements for the entire project, including the utilities, when preparing the Construction SWPPP.

This SWPPP shall be maintained and updated as necessary to provide continued protection. In the event that BMPs shown on the drawings or listed within this SWPPP are not sufficient, additional BMPs shall be deployed. If needed, additional BMPs may be selected from the Pierce County Stormwater and Site Development Manual, or be site-specific.

A copy of this SWPPP (modified as necessary), and copies of all monitoring and inspection logs shall be maintained on site during construction activities, and made available for review by the owner, tenant, engineer, County, and Ecology, upon request.

BMPs to be deployed include:

- BMP C150: Materials on Hand
- BMP C162: Scheduling

Element #13: Protect Low Impact Development BMPs

Low Impact Development BMPs include porous concrete pavement and an infiltration trench. Given the centralized location of these items, it will be difficult for the contractor to avoid running equipment back and forth across them. That said, these items are annotated on the drawings and notation is provided to avoid construction traffic and stockpiling of materials to the extent practicable.

4.0 CONCLUSION

The proposed project will disturb approximately 0.20 acres. The proposed BMPs include temporary high visibility plastic fence and silt fence. The site may potentially require such BMPs as wattles and plastic covering based on the site/weather conditions.

All BMPs are designed per Pierce County code. This report is part of a Stormwater Pollution Prevention Plan (SWPPP) and includes all the required elements for a Temporary Erosion and Sediment Control (TESC) Plan per the Pierce County Stormwater and Site Development Manual.

5.0 REFERENCES

Geotechnical Engineering Investigation; Proposed Addition – Fire Station 5-7. Kane Environmental Inc. Seattle, WA. April 14, 2010.

Memorandum: Updated Seismic Parameters; Proposed Fire Station 5-7 Additions. Cobalt Geosciences, LLC. Kenmore, WA. January 18, 2023.

Pierce County Stormwater Management and Site Development Manual. Ordinance No. 2021-45. Pierce County Surface Water Management. Tacoma, WA. July 2021.

This page intentionally left blank.

Appendix A Figures

Figure 2: Existing Conditions Plan

Figure 3: Soils Map

Figure 4: Clearing & Erosion Control Plan

Figure 5: Erosion Control Notes & Details

This page intentionally left blank.

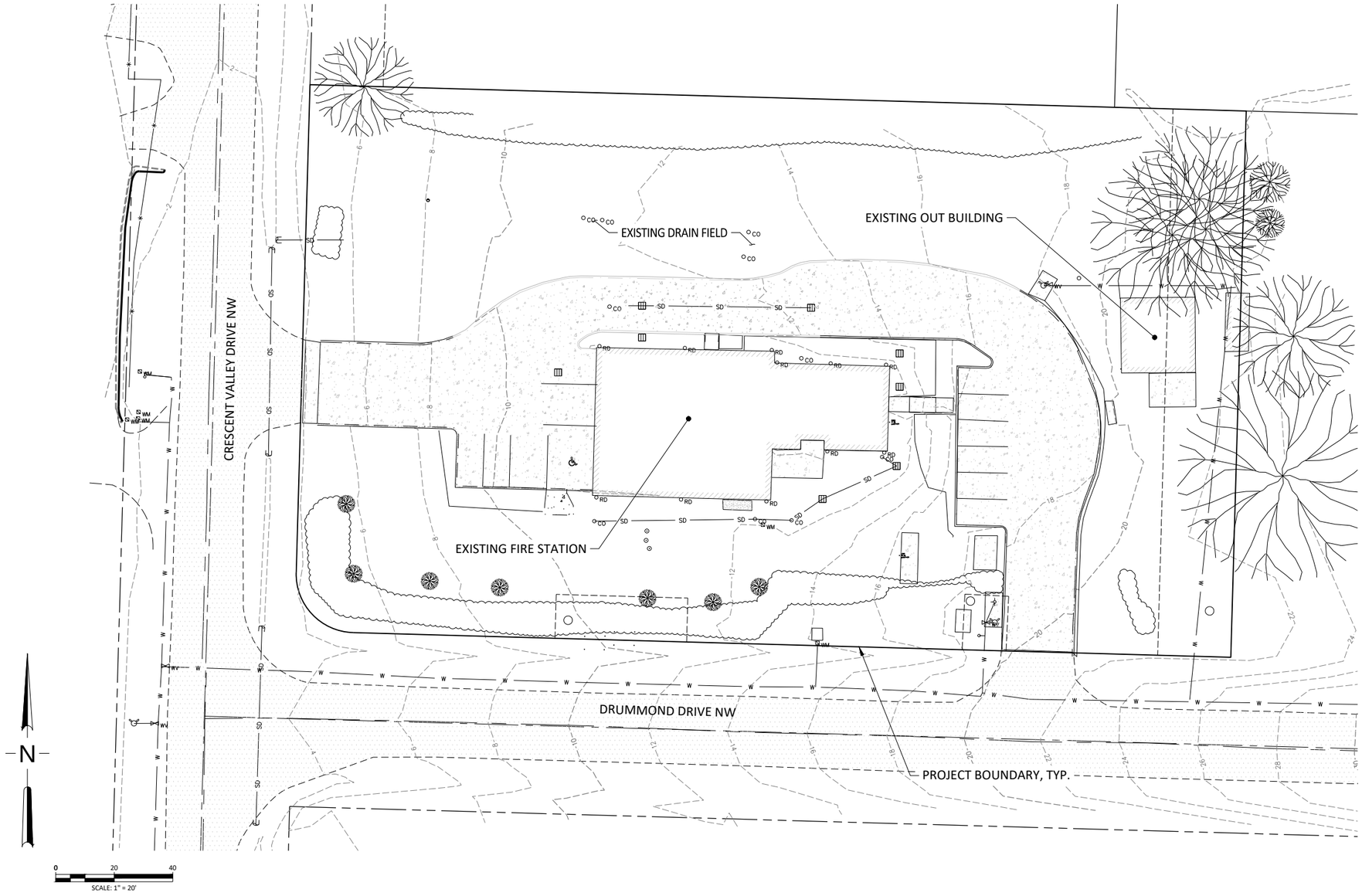

MacKay Sposito

ENERGY PUBLIC WORKS LAND DEVELOPMENT

www.mackaysposito.com

STATION 57 - GIG HARBOR FIRE AND MEDIC ONE

GIG HARBOR, WA

EXISTING CONDITIONS PLAN

FIG. 2

FILE: J:\18017 - GHFMO STATION 57\500 DESIGN\501 DOCUMENTS\REPORTS AND MEMOS\ABRV DRAINAGE REPORT\APP A FIGURES\CAD\FIG 2 - EXISTING CONDITIONS PLAN.DWG

This page intentionally left blank.

N

0 20 40
SCALE: 1" = 20'

Map Unit Legend

Map Unit Symbol	Map Unit Name	Acres in AOI	Percent of AOI
16C	Harstine gravelly ashy sandy loam, 6 to 15 percent slopes	2.2	100.0%
Totals for Area of Interest		**2.2**	**100.0%**

MacKay Sposito

ENERGY PUBLIC WORKS LAND DEVELOPMENT

www.mackaysposito.com

STATION 57 - GIG HARBOR FIRE AND MEDIC ONE

GIG HARBOR, WA

SOILS MAP

FIG. 3

FILE: J:\18017 - GHFMO STATION 57\500 DESIGN\501 DOCUMENTS\REPORTS AND MEMOS\ABRV DRAINAGE REPORT\APP A FIGURES\CAD\FIG 3 - SOILS MAP.DWG

This page intentionally left blank.

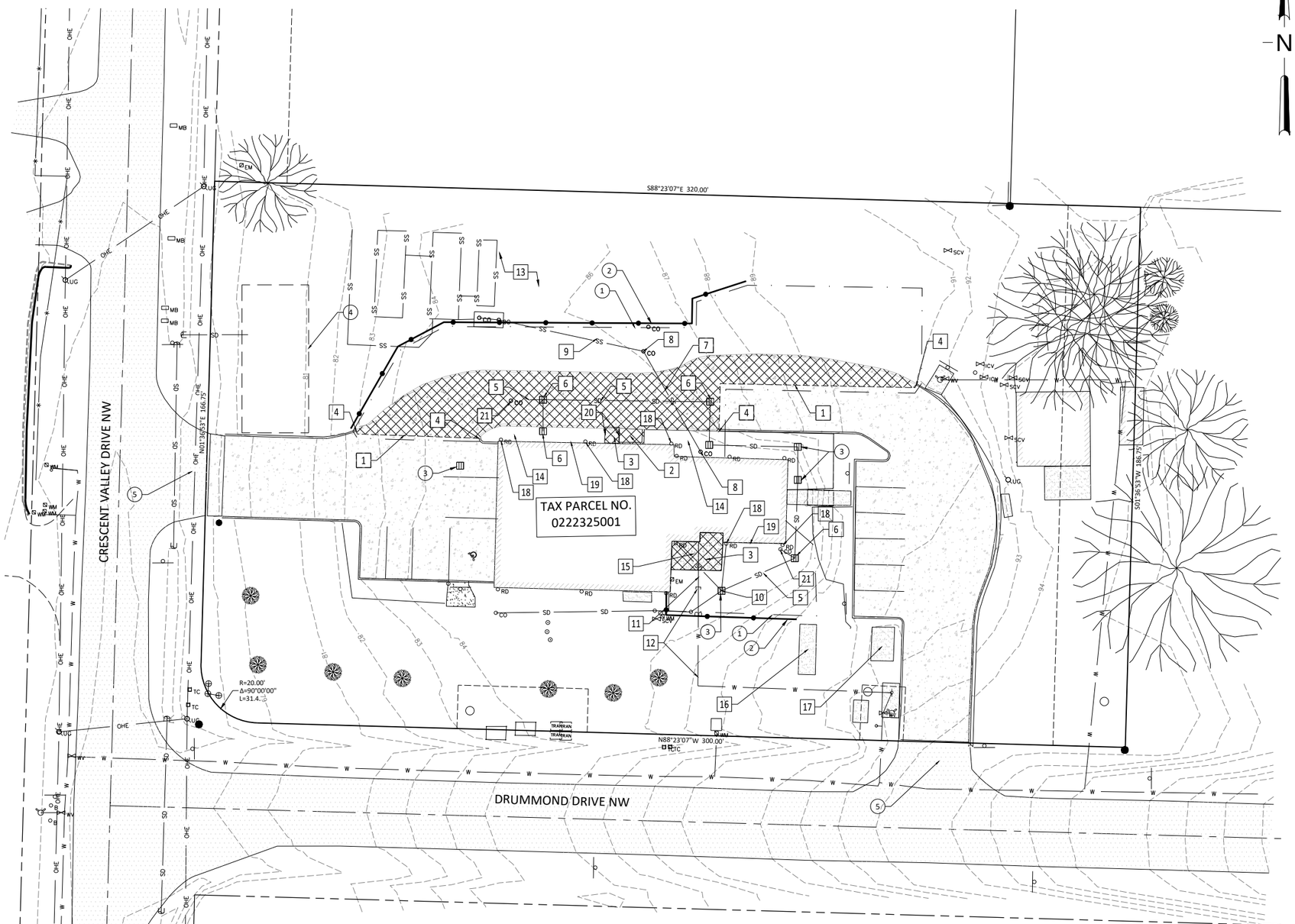

PRIVATE IMPROVEMENTS

1011485
PERMIT #

DEVELOPMENT ENGINEER

DATE

PIERCE COUNTY ORDINANCE NOs: STORM 2021-45 ROAD

1. A PRE-CONSTRUCTION MEETING SHALL BE REQUESTED AT LEAST 48-HOURS IN ADVANCE OF THE START OF CONSTRUCTION. CONTACT LARRY FREMONT, THE AREA INSPECTOR, AT 253-798- 7187.
2. APPOINT A CERTIFIED EROSION AND SEDIMENT CONTROL LEAD WHO SHALL BE PROVIDED A COPY OF THE SWPPP, EROSION CONTROL PLAN & INSPECTION SCHEDULE.
3. FAILURE TO OBTAIN REQUIRED INSPECTIONS MAY ENDANGER OR DELAY PROJECT APPROVAL.
4. ALL WORK IN THE PUBLIC RIGHT-OF-WAY REQUIRES A GENERAL RIGHT-OF-WAY PERMIT FROM PIERCE COUNTY PLANNING AND PUBLIC WORKS.

EROSION CONTROL KEY NOTES

1. LIMIT OF DISTURBANCE
2. SILT FENCE, SEE DETAIL 3, SHEET C01.02
3. INLET PROTECTION, SEE DETAIL 4, SHEET C01.02
4. STOCKPILE AREA. PROVIDE WATTLES, SANDBAGS, OR SIMILAR PERIMETER PROTECTION AND COVERAGE AS NECESSARY.
5. PROVIDE STREET SWEEPING AS NECESSARY TO PREVENT SEDIMENT FROM TRACKING INTO RIGHT-OF-WAY.

NOTE:
DO NOT STOCKPILE LOOSE MATERIAL SUCH AS SOIL, SAND, AGGREGATE, TOPSOIL, ETC. DIRECTLY ON TOP OF EXISTING POROUS CONCRETE. SMALL QUANTITIES MAY BE PLACED ON EXISTING SURFACE IF PLASTIC SHEETING IS PROVIDED. PROMPLTY REMOVE ANY SOIL OR OTHER LOOSE MATERIAL SPILLED ONTO POROUS CONCRETE SURFACE.

DEMOLITION KEY NOTES

1. SAWCUT EXISTING PAVEMENT
2. REMOVE & DISPOSE CHAIN LINK FENCE TRASH ENCLOSURE
3. DEMOLISH & DISPOSE CONCRETE SIDEWALK
4. DEMOLISH EXISTING CURB
5. REMOVE & DISPOSE EXISTING STORM PIPE
6. REMOVE & DISPOSE EXISTING CATCHBASIN
7. REMOVE & DISPOSE EXISTING SANITARY PIPE
8. PRESERVE & PROTECT EXISTING SANITARY CLEANOUT
9. PRESERVE & PROTECT EXISTING SANITARY PIPE
10. PRESERVE & PROTECT EXISTING CATCHBASIN
11. REMOVE & DISPOSE EXISTING FIRE SERVICE LINE
12. PRESERVE & PROTECT EXISTING FIRE SERVICE LINE
13. EXISTING SEPTIC SYSTEM APPROX. LOCATION; PRESERVE & PROTECT
14. SALVAGE AND REUSE EXISTING COBBLES (TYP.)
15. SALVAGE AND RELOCATE EXISTING PICNIC TABLE. SEE ARCH.
16. PRESERVE & PROTECT PROPANE TANK
17. PRESERVE & PROTECT GENERATOR
18. REMOVE AND DISPOSE DOWNSPOUT
19. DEMOLISH AND RE-ROUTE FOUNDATION DRAIN AROUND NEW BUILDING ADDITION
20. SALVAGE EXISTING HANDRAILS FOR USE AT STATION 53
21. REMOVE AND DISPOSE CLEANOUT

CALL
2 BUSINESS DAYS
BEFORE YOU DIG
811
"It's the Law"
www.callbeforeyoudig.com

RICE fergus MILLER
ARCHITECTURE INTERIORS PLANNING VISUAL
275 FIFTH STREET, SUITE 100
BREMERTON, WA 98337
360-377-8773
RFMARCH.COM

MacKay Sposito
ENERGY PUBLIC WORKS LAND DEVELOPMENT
www.mackaysposito.com

ERIC PILCHER
STATE OF WASHINGTON
43952
REGISTERED
PROFESSIONAL ENGINEER

STATION 57 ADDITION
GIG HARBOR FIRE AND MEDIC ONE

GIG HARBOR, WASHINGTON

PROJECT # 2022010.03

PERMIT SET

ISSUE DATE SEPT. 6, 2023

REVISION SCHEDULE

DEMOLITION & TESC

SHEET #
C01.01

DATE/TIME PRINTED: 9/6/2023 2:55 PM
J:\18017 - GHFMO Station 57\500 Design\502 Drawings\Sheets\18017 - C01.01 Demolition & TESC.dwg

This page intentionally left blank.

STANDARD EROSION AND SEDIMENT CONTROL NOTES

1. APPROVAL OF THIS CONSTRUCTION SWPPP DOES NOT CONSTITUTE AN APPROVAL OF PERMANENT ROAD OR DRAINAGE DESIGN (E.G., SIZE AND LOCATION OF ROADS, PIPES, RESTRICTORS, CHANNELS, RETENTION/ DETENTION/INFILTRATION FACILITIES, UTILITIES, ETC.).
2. THE IMPLEMENTATION OF THIS CONSTRUCTION SWPPP AND THE CONSTRUCTION, MAINTENANCE, REPLACEMENT, AND UPGRADING OF THESE CONSTRUCTION SWPPP FACILITIES IS THE RESPONSIBILITY OF THE APPLICANT/CONTRACTOR UNTIL ALL CONSTRUCTION IS COMPLETED AND APPROVED AND VEGETATION/LANDSCAPING IS ESTABLISHED.
3. THE BOUNDARIES OF THE CLEARING LIMITS SHOWN ON THIS PLAN SHALL BE CLEARLY FLAGGED IN THE FIELD PRIOR TO CONSTRUCTION. DURING THE CONSTRUCTION PERIOD, NO DISTURBANCE BEYOND THE FLAGGED CLEARING LIMITS SHALL BE PERMITTED. THE FLAGGING SHALL BE MAINTAINED BY THE APPLICANT/CONTRACTOR FOR THE DURATION OF CONSTRUCTION.
4. THE CONSTRUCTION SWPPP FACILITIES SHOWN ON THIS PLAN MUST BE CONSTRUCTED IN CONJUNCTION WITH ALL CLEARING AND GRADING ACTIVITIES, AND IN SUCH A MANNER AS TO INSURE THAT SEDIMENT AND SEDIMENT LADEN WATER DO NOT ENTER THE DRAINAGE SYSTEM, ROADWAYS, OR VIOLATE APPLICABLE WATER STANDARDS.
5. THE CONSTRUCTION SWPPP FACILITIES SHOWN ON THIS PLAN ARE THE MINIMUM REQUIREMENTS FOR ANTICIPATED SITE CONDITIONS. DURING THE CONSTRUCTION PERIOD, THESE CONSTRUCTION SWPPP FACILITIES SHALL BE UPGRADED AS NEEDED FOR UNEXPECTED STORM EVENTS AND TO ENSURE THAT SEDIMENT AND SEDIMENT-LADEN WATER DO NOT LEAVE THE SITE.
6. THE CONSTRUCTION SWPPP FACILITIES SHALL BE INSPECTED DAILY BY THE APPLICANT/CONTRACTOR AND MAINTAINED AS NECESSARY TO ENSURE THEIR CONTINUED FUNCTIONING.
7. THE CONSTRUCTION SWPPP FACILITIES ON INACTIVE SITES SHALL BE INSPECTED AND MAINTAINED A MINIMUM OF ONCE A MONTH OR WITHIN THE 48 HOURS FOLLOWING A MAJOR STORM EVENT.
8. AT NO TIME SHALL MORE THAN 1-FOOT OF SEDIMENT BE ALLOWED TO ACCUMULATE WITHIN A TRAPPED CATCH BASIN. ALL CATCH BASINS AND CONVEYANCE LINES SHALL BE CLEANED PRIOR TO PAVING. THE CLEANING OPERATION SHALL NOT FLUSH SEDIMENT LADEN WATER INTO THE DOWNSTREAM SYSTEM.
9. STABILIZED CONSTRUCTION ENTRANCES SHALL BE INSTALLED AT THE BEGINNING OF CONSTRUCTION AND MAINTAINED FOR THE DURATION OF THE PROJECT. ADDITIONAL MEASURES MAY BE REQUIRED TO INSURE THAT ALL PAVED AREAS ARE KEPT CLEAN FOR THE DURATION OF THE PROJECT.

CONSTRUCTION SEQUENCE

1. CALL PIERCE COUNTY INSPECTOR TO ARRANGE A PRE-CONSTRUCTION MEETING.
2. IDENTIFY LIMITS OF CLEARING.
3. INSTALL FILTER FABRIC FENCE AND TREE PROTECTION FENCE.
4. INSTALL ROCK-LINED CONSTRUCTION ENTRANCE(S).
5. CLEAR TO LIMITS SHOWN ON PLAN.
6. SAWCUT AND DEMOLISH EXISTING PAVEMENTS TO LIMITS SHOWN ON THE PLANS.
7. ROUGH GRADE SITE AS DESIGNED.
8. INSTALL BUILDING FOUNDATION.
9. INSTALL SANITARY SEWER SYSTEM (TO SEPTIC).
10. INSTALL STORM DRAINAGE.
11. INSTALL SEDIMENT BARRIERS OVER NEW CATCH BASINS.
12. PAVE FLOOR SLABS AND BEGIN VERTICAL CONSTRUCTION.
13. FINE GRADE FOR CURB AND GUTTER, AND SIDEWALKS.
14. INSTALL CURB AND GUTTER.
15. PAVE SITE.
16. INSTALL SIDEWALKS.
17. HYDROSEED ALL SLOPES NOT LANDSCAPED OR ANTICIPATED FOR ADDITIONAL WORK WITHIN 6 MONTHS.
18. COMPLETE LANDSCAPING.
19. REMOVE SEDIMENT BARRIERS.

SEEDING NOTES

1. SEED MIXTURE SHALL BE AS SHOWN BELOW, AND SHALL BE APPLIED AT THE RATE OF 120 POUNDS PER ACRE.

NAME	PROPORTION BY WEIGHT	PERCENT PURITY	PERCENT GERMINATION
RED TOP	10%	92	90
ANNUAL RYE	40%	98	90
CHEWING FESCUE	40%	97	80
WHITE DUTCH CLOVER	10%	96	90

2. SEED BEDS PLANTED BETWEEN MAY 1 AND OCTOBER 31 WILL REQUIRE IRRIGATION AND OTHER MAINTENANCE AS NECESSARY TO FOSTER AND PROTECT THE ROOT STRUCTURE.
3. FOR SEED BEDS PLANTED BETWEEN OCTOBER 31 AND APRIL 30, ARMORING OF THE SEED BED WILL BE NECESSARY. (E.G., GEOTEXTILES, JUTE MAT, CLEAR PLASTIC COVERING).
4. BEFORE SEEDING, INSTALL NEEDED SURFACE RUNOFF CONTROL MEASURES SUCH AS GRADIENT TERRACES, INTERCEPTOR DIKES, SWALES, LEVEL SPREADERS AND SEDIMENT BASINS.
5. THE SEEDBED SHALL BE FIRM WITH A FAIRLY FINE SURFACE, FOLLOWING SURFACE ROUGHENING. PERFORM ALL OPERATIONS ACROSS OR AT RIGHT ANGLES TO THE SLOPE.
6. FERTILIZERS ARE TO BE USED ACCORDING TO SUPPLIERS RECOMMENDATIONS. AMOUNTS USED SHOULD BE MINIMIZED, ESPECIALLY ADJACENT TO WATER BODIES AND WETLANDS.

SILT FENCE NOTES

1. THE CONTRACTOR SHALL INSTALL AND MAINTAIN TEMPORARY SILT FENCES AT THE LOCATIONS SHOWN IN THE PLANS.
2. CONSTRUCT SILT FENCES IN AREAS OF CLEARING, GRADING, OR DRAINAGE PRIOR TO STARTING THOSE ACTIVITIES.
3. THE SILT FENCE SHALL HAVE A 2-FEET MIN. AND 2.5-FEET MAX. HEIGHT ABOVE THE ORIGINAL GROUND SURFACE.
4. THE FILTER FABRIC SHALL BE SEWN TOGETHER AT THE POINT OF MANUFACTURE TO FORM FILTER FABRIC LENGTHS AS REQUIRED. LOCATE ALL SEWN SEAMS AT SUPPORT POSTS. ALTERNATIVELY, TWO SECTIONS OF SILT FENCE CAN BE OVERLAPPED, PROVIDED THE CONTRACTOR CAN DEMONSTRATE, TO THE SATISFACTION OF THE ENGINEER, THAT THE OVERLAP IS LONG ENOUGH AND THAT THE ADJACENT FENCE SECTIONS ARE CLOSE ENOUGH TOGETHER TO PREVENT SILT LADEN WATER FROM ESCAPING THROUGH THE FENCE AT THE OVERLAP.
5. ATTACH THE FILTER FABRIC ON THE UP-SLOPE SIDE OF THE POSTS AND SECURE WITH STAPLES, WIRE, OR IN ACCORDANCE WITH THE MANUFACTURER'S RECOMMENDATIONS. ATTACH THE FILTER FABRIC TO THE POSTS IN A MANNER THAT REDUCES THE POTENTIAL FOR TEARING.
6. SUPPORT THE FILTER FABRIC WITH WIRE OR PLASTIC MESH, DEPENDENT ON THE PROPERTIES OF THE GEOTEXTILE SELECTED FOR USE. IF WIRE OR PLASTIC MESH IS USED, FASTEN THE MESH SECURELY TO THE UP-SLOPE SIDE OF THE POSTS WITH THE FILTER FABRIC UP-SLOPE OF THE MESH.
7. MESH SUPPORT, IF USED, SHALL CONSIST OF STEEL WIRE WITH A MAXIMUM MESH SPACING OF 2-INCHES, OR A PREFABRICATED POLYMERIC MESH. THE STRENGTH OF THE WIRE OR POLYMERIC MESH SHALL BE EQUIVALENT TO OR GREATER THAN 180 POUNDS GRAB TENSILE STRENGTH. THE POLYMERIC MESH MUST BE AS RESISTANT TO THE SAME LEVEL OF ULTRAVIOLET RADIATION AS THE FILTER FABRIC IT SUPPORTS.
8. BURY THE BOTTOM OF THE FILTER FABRIC 8-INCHES MIN. BELOW THE GROUND SURFACE. BACKFILL AND TAMP SOIL IN PLACE OVER THE BURIED PORTION OF THE FILTER FABRIC, SO THAT NO FLOW CAN PASS BENEATH THE FENCE AND SCOURING CANNOT OCCUR. THE WIRE OR POLYMERIC MESH SHALL EXTEND INTO THE GROUND 3-INCHES MIN.
9. DRIVE OR PLACE THE FENCE POSTS INTO THE GROUND 18-INCHES MINIMUM. A 12-INCH MINIMUM DEPTH IS ALLOWED IF TOPSOIL OR OTHER SOFT SUBGRADE SOIL IS NOT PRESENT AND 18-INCHES CANNOT BE REACHED. INCREASE FENCE POST MIN. DEPTHS BY 6-INCHES IF THE FENCE IS LOCATED ON SLOPES OF 3H:1V OR STEEPER AND THE SLOPE IS PERPENDICULAR TO THE FENCE. IF REQUIRED POST DEPTHS CANNOT BE OBTAINED, THE POSTS SHALL BE ADEQUATELY SECURED BY BRACING OR GUYING TO PREVENT OVERTURNING OF THE FENCE DUE TO SEDIMENT LOADING.
10. USE WOOD, STEEL, OR EQUIVALENT POSTS. THE SPACING OF THE SUPPORT POSTS SHALL BE A MAXIMUM OF 6-FEET. POSTS SHALL CONSIST OF EITHER:
    - WOOD WITH DIMENSIONS OF 2-INCHES BY 2-INCHES WIDE MIN. AND A 3-FEET MIN. LENGTH. WOOD POSTS SHALL BE FREE OF DEFECTS SUCH AS KNOTS, SPLITS, OR GOUGES.
    - NO. 6 STEEL REINFORCEMENT BAR OR LARGER.
    - ASTM A 120 STEEL PIPE WITH A MINIMUM DIAMETER OF 1-INCH.
    - U, T, L, OR C SHAPE STEEL POSTS WITH A MINIMUM WEIGHT OF 1.35 POUNDS/FEET.
    - OTHER STEEL POSTS HAVING EQUIVALENT STRENGTH AND BENDING RESISTANCE TO THE POST SIZES LISTED ABOVE.
11. LOCATE SILT FENCES ON CONTOUR AS MUCH AS POSSIBLE, EXCEPT AT THE ENDS OF THE FENCE, WHERE THE FENCE SHALL BE TURNED UPHILL SUCH THAT THE SILT FENCE CAPTURES THE RUNOFF WATER AND PREVENTS WATER FROM FLOWING AROUND THE END OF THE FENCE.
12. IF THE FENCE MUST CROSS CONTOURS, WITH THE EXCEPTION OF THE ENDS OF THE FENCE, PLACE GRAVEL CHECK DAMS PERPENDICULAR TO THE BACK OF THE FENCE TO MINIMIZE CONCENTRATED FLOW AND EROSION. THE SLOPE OF THE FENCE LINE WHERE CONTOURS MUST BE CROSSED SHALL NOT BE STEEPER THAN 3H:1V.
    - GRAVEL CHECK DAMS SHALL BE APPROXIMATELY 1-FOOT DEEP AT THE BACK OF THE FENCE. GRAVEL CHECK DAMS SHALL BE CONTINUED PERPENDICULAR TO THE FENCE AT THE SAME ELEVATION UNTIL THE TOP OF THE CHECK DAM INTERCEPTS THE GROUND SURFACE BEHIND THE FENCE.
    - GRAVEL CHECK DAMS SHALL CONSIST OF CRUSHED SURFACING BASE COURSE, GRAVEL BACKFILL FOR WALLS, OR SHOULDER BALLAST. GRAVEL CHECK DAMS SHALL BE LOCATED EVERY 10-FEET ALONG THE FENCE WHERE THE FENCE MUST CROSS CONTOURS.

INLET PROTECTION NOTES

1. PLACE CONCRETE BLOCKS LENGTHWISE ON THEIR SIDES IN A SINGLE ROW AROUND THE PERIMETER OF THE INLET, SO THAT THE OPEN ENDS FACE OUTWARD, NOT UPWARD. THE ENDS OF ADJACENT BLOCKS SHALL ABUT. THE HEIGHT OF THE BARRIER CAN BE VARIED, DEPENDING ON DESIGN NEEDS, BY STACKING COMBINATIONS OF BLOCKS THAT ARE 4 INCHES, AND 12 INCHES WIDE. THE ROW OF BLOCKS SHALL BE AT LEAST 12 INCHES BUT NO GREATER THAN 24 INCHES HIGH.
2. PLACE WIRE MESH OVER THE OUTSIDE VERTICAL FACE (OPEN END) OF THE CONCRETE BLOCKS TO PREVENT STONE FROM BEING WASHED THROUGH THE BLOCKS. USE HARDWARE CLOTH OR COMPARABLE WIRE MESH WITH 1/2 INCH OPENINGS.
3. PILE STONE AGAINST THE WIRE MESH TO THE TOP OF THE BLOCKS. USE 3/4 TO 3 INCH GRAVEL.
4. PLACE WIRE MESH OVER THE DROP INLET SO THAT THE WIRE EXTENDS A MINIMUM OF 1 FOOT BEYOND EACH SIDE OF THE INLET STRUCTURE. USE HARDWARE CLOTH OR COMPARABLE WIRE MESH WITH 1/2 INCH OPENINGS. IF MORE THAN ONE STRIP OF MESH IS NECESSARY, OVERLAP THE STRIPS. PLACE FILTER FABRIC OVER WIRE MESH.
5. PLACE 3/4 INCH GRAVEL OVER THE WIRE MESH. THE DEPTH OF STONE SHALL BE AT LEAST 12 INCHES OVER THE ENTIRE INLET OPENING. EXTEND THE STONE BEYOND THE INLET OPENING AT LEAST 18 INCHES ON ALL SIDES.
6. IF THE STONE FILTER BECOMES CLOGGED WITH SEDIMENT, THE STONES MUST BE PULLED AWAY FROM THE INLET AND CLEANED OR REPLACED.

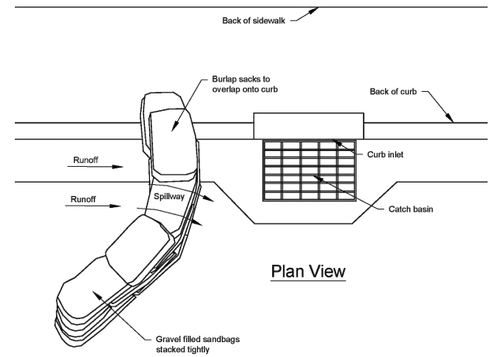

Notes:
1. Place curb type sediment barriers on gently sloping street segments, where water can pond and allow sediment to separate from runoff.
2. Sandbags of either burlap or woven 'geotextile' fabric, are filled with gravel, layered and packed tightly.
3. Leave a one sandbag gap in the top row to provide a spillway for overflow.
4. Inspect barriers and remove sediment after each storm event. Sediment and gravel must be removed from the traveled way immediately.

NOT TO SCALE

1 CURB AND GUTTER BARRIER
NOT TO SCALE

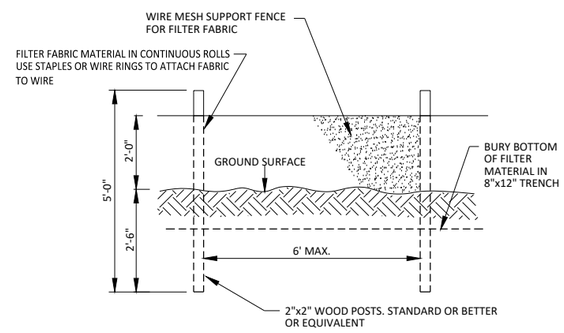

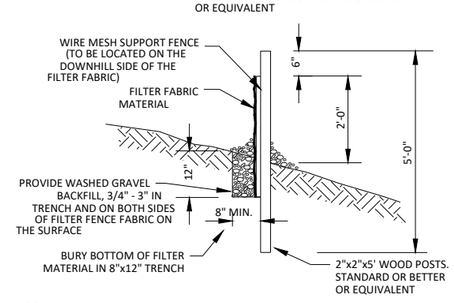

2 FILTER FABRIC FENCE
NOT TO SCALE

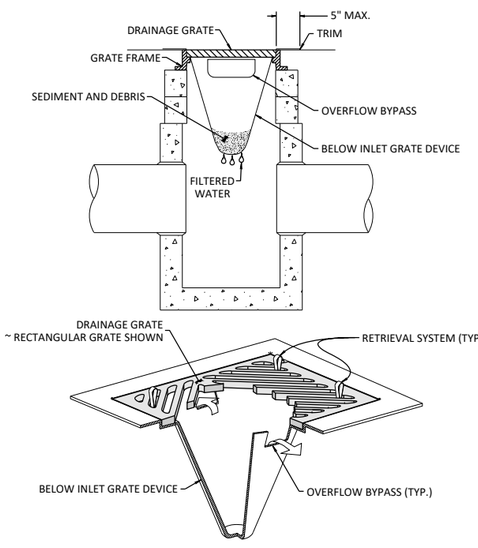

NOTES:
1. SIZE THE BELOW INLET GRATE DEVICE (BIGD) FOR THE STORM WATER STRUCTURE IT WILL SERVICE.
2. THE BIGD SHALL HAVE A BUILT-IN HIGH-FLOW RELIEF SYSTEM (OVERFLOW BYPASS).
3. THE RETRIEVAL SYSTEM MUST ALLOW REMOVAL OF THE BIGD WITHOUT SPILLING THE COLLECTED MATERIAL.
4. PERFORM MAINTENANCE IN ACCORDANCE WITH STANDARD SPECIFICATION 8-01.3(15).

3 STORM DRAIN INLET PROTECTION
NOT TO SCALE

PRIVATE IMPROVEMENTS — 1011485 PERMIT #

DEVELOPMENT ENGINEER — DATE

PIERCE COUNTY ORDINANCE NOs: STORM 2021-45 ROAD

1. A PRE-CONSTRUCTION MEETING SHALL BE REQUESTED AT LEAST 48-HOURS IN ADVANCE OF THE START OF CONSTRUCTION. CONTACT LARRY FREMONT, THE AREA INSPECTOR, AT 253-798- 7187.
2. APPOINT A CERTIFIED EROSION AND SEDIMENT CONTROL LEAD WHO SHALL BE PROVIDED A COPY OF THE SWPPP, EROSION CONTROL PLAN & INSPECTION SCHEDULE.
3. FAILURE TO OBTAIN REQUIRED INSPECTIONS MAY ENDANGER OR DELAY PROJECT APPROVAL.
4. ALL WORK IN THE PUBLIC RIGHT-OF-WAY REQUIRES A GENERAL RIGHT-OF-WAY PERMIT FROM PIERCE COUNTY PLANNING AND PUBLIC WORKS.

RICE Fergus MILLER
ARCHITECTURE INTERIORS PLANNING VISUAL
275 FIFTH STREET, SUITE 100
BREMERTON, WA 98337
360-377-8773
RFMARCH.COM

MacKay Sposito
ENERGY PUBLIC WORKS LAND DEVELOPMENT
www.mackaysposito.com

ERIC L. PILCHER — STATE OF WASHINGTON — 43952 — REGISTERED PROFESSIONAL ENGINEER

STATION 57 ADDITION
GIG HARBOR FIRE AND MEDIC ONE
GIG HARBOR, WASHINGTON

PROJECT # 2022010.03

PERMIT SET

ISSUE DATE SEPT. 6, 2023

REVISION SCHEDULE

TESC NOTES & DETAILS

SHEET # C01.02

CALL 2 BUSINESS DAYS BEFORE YOU DIG 811 "It's the Law" www.callbeforeyoudig.com

DATE/TIME PRINTED: 7/3/2023 8:29 AM
J:\18017 - GHFMO Station 57\500 Design\502 Drawings\Sheets\18017 - C01.02 TESC Notes & Details.dwg

This page intentionally left blank

SECTION 004113 BID FORM

TO: Gig Harbor Fire and Medic One

ADDRESS:

10222 Bujacich Rd NW, Gig Harbor, WA 98332

I, representing (name of Bidder), have

5. Received Bid Documents titled Gig Harbor Fire and Medic One Stations 53 and 57 Additions.
6. Received Addenda Nos. _____and have included their provisions in my bid;
7. Have examined the Instructions and Specifications for this project and the site / job conditions and submit the following Bid. In submitting this bid, I agree:
   a. To hold my bid open in accordance with the Instructions to Bidders contained within the Project manual, as modified and supplemented;
   b. To enter into and execute referenced Contract, if awarded, on basis of this bid and to furnish bonds and insurance required by the Bidding Documents;
   c. To accomplish the work in accordance with the Contract Documents; and
   d. To complete the work by the time stipulated in the Project manual and the Contract.

OVERHEAD, PROFIT, AND THE LIKE

All bid prices listed in this form include overhead, profit, bonds, and all other expenses involved.

SALES TAX

All bid prices listed in this bid Form **DO NOT INCLUDE** applicable local and Washington State Sales Tax.

BID AMOUNT

I WILL CONSTRUCT THIS PROJECT FOR THE FOLLOWING PRICE:

_____Dollars

$_____

TRENCH EXCAVATION SAFETY PROCEDURES $_____

INCLUDE IN BASE BID - _____

If the bid amount contains any work which requires trenching exceeding a depth of four feet, all costs for trench safety shall be included in the Base Bid as indicated above for adequate trench safety systems in compliance with Chapter 39.04 RCW and WAC 296-155-650.

Bidder must include a lump sum dollar amount in the blank above (even if the value is $0.00) to be responsive.

PRINCIPAL SUBCONTRACTORS

For any subcontract amounts that exceed 10% of the contractor's base bid price, contractor shall list such subcontractor and subcontract amount below (affix additional sheets as necessary).

Subcontractor Agency or Business Name	Amount

Provide the name of the Subcontractors used for the following:

Type of Service	Agency or Business Name
Heating, Ventilating and Air Conditioning	
Plumbing	
Electrical	

CONTRACT TIME

The Owner anticipates that the Notice of Award of this Contract shall be issued on or about 30 days from bid receipt. Owner shall execute the Contract and issue a Notice to Proceed upon satisfactory receipt of Certificate of Insurance, Bonds, and related documents as required by the Instructions to Bidders, the General Conditions of the Contract, and Supplemental Conditions of the Contract.

If this Bid is accepted, we will Substantially Complete the work within **300** calendar days from Notice to Proceed. **Bidder Initials:** _____

Liquidated damages will be assessed in accordance with the Contract.

CONTRACTOR'S Certification of Responsibility

Contractor has:

- Industrial insurance coverage as required under Title 51 RCW;
- A certificate of registration under RCW 18.27;
- Employment security department number as required under Title 50 RCW;
- A current uniform business identifier (UBI);
- State excise tax registration number as required under Title 82 RCW;
- Not been disqualified from bidding on any public works projects; and
- If subject to apprenticeship utilization, not been found out of compliance experience on other projects of similar construction

The signatory as identified on the Bid Form certifies under oath that the information provided herein is true and sufficiently complete so as not to be misleading.
Bidder Initials: _____

Bidder Responsibility Statement

- Bidder has received training on prevailing wage and public works requirements.
  Bidder Initials: _____
- Bidder hereby certifies that all of the first-tier subcontractors enumerated above meet the responsibility criteria of RCW 39.04.350 (1).
  Bidder Initials: _____

In accordance with RCW 39.06, a public works contractor must verify responsibility criteria for each first-tier subcontractor, and a subcontractor of any tier that hires other subcontractors must verify responsibility criteria for each of its subcontractors. Verification shall include that each subcontractor, at the time of the subcontract execution, meets the responsibility criteria of RCW 39.04.350 (1) and possesses an electric contractor license, if required by RCW 19.28 or an elevator contractor license, if required by RCW 70.87.

Providing the following information is MANDATORY in order to meet responsive bidder requirements. If your business is not required to have one of the following items, please provide an explanation.	
State of Washington Contractor Registration #	
UBI#	
State Excise Tax Registration#	
Is the payment of Industrial Insurance current?	
Are you disqualified from bidding on public works projects in the State of Washington?	

I certify under penalty of perjury under the laws of the State of Washington that the foregoing is true and correct. **Bidder Initials: _____**

I understand that meeting the above responsibility criteria does not guarantee that I shall be awarded the Contract. **Bidder Initials:** _____

CERTIFICATION OF COMPLIANCE WITH WAGE PAYMENT STATUTES

The bidder hereby certifies that, within the three-year period immediately preceding the bid solicitation date insert bid date, the bidder is not a "willful" violator, as defined in RCW 49.48.082, of any provision of chapters 49.46, 49.48, or 49.52 RCW, as determined by a final and binding citation and notice of assessment issued by the Department of Labor and Industries or through a civil judgment entered by a court of limited or general jurisdiction.

I certify under penalty of perjury under the laws of the State of Washington that the foregoing is true and correct.

_____
Bidder's Business Name

_____
Signature of Authorized Official*

_____
Printed Name

_____
Title

_____ _____ _____
Date City State

Check One:

- ☐ Sole Proprietorship
- ☐ Partnership

- ☐ Joint Venture
- ☐ Corporation

** If a corporation, this proposal must be executed in the* corporate *name by the president* or *vice-president (or any other corporate officer accompanied by evidence of authority to sign). If a co-partnership, proposal* must *be executed by a partner.*

State of Incorporation (if you are a corporation): _____

State where business entity was formed (if not a corporation): _____

If you are a co-partnership, please give the name under which you transact business:

_____

If you are a co-partnership, please indicate the name and address of all partners below:

_____

Combined Non-Collusion and Certificate Form for Minimum Wage

I certify that the person, firm, association co-partnership or corporation herein named has not either directly or indirectly entered into any agreement, participated in any collusion, or otherwise taken any action in restraint of free competitive bidding in the preparation and submission of a proposal to the Owner for consideration in the award of a contract on the improvements described for Pierce County Fire Protection District No. Five. I further certify that the person, firm, association co-partnership or corporation herein has not in any manner sought by collusion to secure to him/herself or to any other person any advantage over other bidder or bidders.

AND

I certify that the person, firm, association co-partnership or corporation herein will pay each classification of laborer, workman/woman or mechanic employed in the performance of such work not less than prevailing rate of wage.

_____
Name of Bidder's Firm

_____
Signature of Authorized Representative of Bidder

This proposal submitted by:

NAME OF FIRM	
SIGNED BY	
PRINTED NAME/TITLE	
ADDRESS	
CITY/STATE/ZIP	
TELEPHONE	
FAX	
EMAIL ADDRESS	

END OF SECTION

BIDDER'S CHECKLIST

The omission or deletion of any bid item may be considered non-responsive and may be cause for the rejection of the bid.

1. ☐ Has a bid bond or certified check been enclosed with your bid? Is the amount of the bid guaranty at least 5 percent of the total amount of the bid?

2. ☐ Has the proposal been properly completed and signed? Do the written amounts on the proposal agree with the amounts shown in the figures?

3. ☐ Have you bid on all items including, if applicable, all alternates?

4. ☐ Have you acknowledged all addenda, if any, in the Bid Proposal Form?

5. ☐ Do not submit any of the forms still attached to the Project Manual. Remove or copy the forms and submit them in the sealed envelope as directed.

6. ☐ Are you and all your subcontractors familiar with the schedule of value requirements?

7. ☐ Have you reviewed the Bidder's Qualifications and Bidder Responsibility Criteria?

8. ☐ <u>The following items must be completed and included within the sealed bid submittal envelope:</u>

A. ☐ Bid Form (00 41 13) The bid price must be shown in the space provided. Show price in both words and figures. The bid form must be completed in full, signed, and dated.

B. ☐ Bidder's Qualifications Certificate: This form must be filled in and signed. The Owner reserves the right to check all statements and to judge the adequacy of the bidder's qualifications.

C. ☐ Bid Bond Security: A surety issued bid bond must be executed by the bidder and its surety company. The amount of the bid bond shall be not less than five (5%) of the total bid and may be shown in dollars or on a percentage basis. A cashier's check payable to the Pierce County Fire Protection District No. Five and issued for an amount not less than 5% of the total bid may be submitted in lieu of a bid bond.

D. ☐ Non-Collusion, Bidder Responsibility, and Minimum Wage Certification Form. This form must be filled in, signed, and notarized.

E. ☐ Subcontractor Identification List

9. ☐ <u>The following forms are to be executed after the contract is awarded:</u>

A. ☐ AGREEMENT FORM: The agreement to be executed by the successful bidder.

B. ☐ PERFORMANCE BOND: One hundred percent of the Contract Price to be executed by the successful bidder and his surety company. The surety on such bonds shall be a duly authorized surety company satisfactory of the Owner.

C. ☐ LABOR MATERIALS AND TAXES BOND (PAYMENT BOND): One hundred percent of the Contract Price to be executed by the successful bidder and his surety company. The surety on such bonds shall be a duly authorized surety company satisfactory of the Owner.

D. ☐ RETAINAGE INVESTMENT OPTION: This agreement to be executed by the successful bidder.

E. ☐ CERTIFICATES OF INSURANCE: To be executed by the successful bidder and by an acceptable insurance company.

F. ☐ CONTRACTOR'S CERTIFICATION: Concerning Labor Standards and Prevailing Wage Requirements. Submit Statement of Intent to Pay Prevailing Wages. (Form F 700-029-000, available at Offices of Washington State Department of Labor and Industries)

OWNER-CONTRACTOR AGREEMENT

BASIS OF PAYMENT: STIPULATED SUM

THIS AGREEMENT AND CONTRACT is made and entered into, in triplicate, at Pierce County, Washington, this _____day of ____, 2024 by and between Pierce County Fire Protection District No. Five (OWNER), a municipal corporation, and _____, hereinafter called the CONTRACTOR, who shall hereinafter be collectively referred to as the "Parties," or individually as "Party."

WITNESSETH: That, in consideration of the terms and conditions set forth within this Contract, the Parties hereto covenant and agree as follows:

I. **THE CONTRACT DOCUMENTS.** The CONTRACTOR shall do all work and furnish all tools, materials and equipment for the Project, the construction of a fire station, along with associated site improvements, in accordance with and as described in the Contract Documents which are by this reference incorporated herein and made a part hereof, and shall perform any alterations in or additions to the work provided under this Contract and every part thereof. The Contract Documents include, but are not limited to, the Bid Item Description and Specifications, and any other Addenda existing at the time of the execution of this Contract. Although this Contract supersedes any conflicting agreements or invitations to negotiate made prior to this Contract, Addenda issued prior to execution of this Contract, other documents listed in this Contract and valid Modifications mutually agreed to after execution of this Contract are as fully a part of the Contract as if attached to this Contract or repeated herein. The Contract represents the entire and integrated agreement between the Parties hereto and supersedes prior negotiations, representations or agreements, either written or oral. An enumeration of the Contract Documents, other than any future Modification, appears in Article X of this Contract.

II. **SCOPE OF WORK.** OWNER hereby promises and agrees with the CONTRACTOR to employ, and does employ the CONTRACTOR, to provide the materials and to do and cause to be done the above-described work and to complete and finish the same according to the Contract Documents and the terms and conditions herein contained, and hereby contracts to pay for the same according to said Contract Documents hereto attached, at the time and in the manner and upon the conditions provided for in this Contract.

CONTRACTOR shall provide and bear the expense of all equipment, work and labor of any sort whatsoever that may be required for the transfer of materials and for constructing and completing the work provided for in this Contract and every part thereof, except such as are mentioned in the Contract Documents to be furnished by OWNER. CONTRACTOR shall fully execute the work described in the Contract

Documents, except as specifically indicated in the Contract Documents to be the responsibility of others.

III. **DATE OF COMMENCEMENT AND SUBSTANTIAL COMPLETION**. This Contract shall be executed by the CONTRACTOR and returned to OWNER within five (5) working days after the receipt of the dated notification of award and the Contract time shall commence after execution of this Contract by OWNER, as designated on the Notice to Proceed. Substantial Completion shall be within 300 calendar days of the date on the Notice to Proceed, and contract Completion shall be within 30 calendar days thereafter. The work performed shall be deemed substantially complete when OWNER is satisfied that CONTRACTOR has performed the work delineated herein, and in accordance with the Contract Documents, in a WORKMANLIKE FASHION. Additionally, the work shall not be substantially complete until such time as OWNER shall have been granted a certificate of occupancy and the newly constructed fire station is in a habitable condition.

The Parties may negotiate separate substantial completion dates for each aspect of the work to be performed, in the following manner:

Portion of Work	Substantial Completion Date

Portion of Work	Substantial Completion Date

Portion of Work	Substantial Completion Date

Portion of Work	Substantial Completion Date

IV. **LIQUIDATED DAMAGES.** OWNER and the CONTRACTOR recognize that time is of the essence in the performance of this Contract, and that OWNER shall suffer financial loss if the work is not completed in the times set forth under Article III herein. If said work is not completed within the time specified for Substantial

Completion set forth in Article III, the CONTRACTOR agrees to pay, as damages for delay, and not as a penalty, $250.00 per calendar day as liquidated damages to OWNER; and if contract Completion is not certified within an additional 60 calendar days, the CONTRACTOR agrees to pay $ 250.00 per calendar day as liquidated damages to OWNER.

However, OWNER will not hold CONTRACTOR liable under this Article IV for events or occurrences that are beyond CONTRACTOR's control.

V. **CONTRACT SUM AND PROGRESS PAYMENTS.** OWNER shall pay the CONTRACTOR the Contract Sum in current funds for the CONTRACTOR's performance of the Contract. The Contract Sum shall be the stipulated sum of _____subject to additions and deductions as provided for in the Contract Documents. This Contract Sum does not include applicable sales tax, which shall be set forth within Addenda, as part of the Contract Documents. The Contract Sum shall be tendered in accordance with the fee schedule or schedule of values as outlined in the Contract Documents, and shall not be disbursed in one lump sum, but disbursed in progress payments, when the work has been substantially completed in accordance with the Contract Documents and this Contract. Pursuant to RCW 60.28.011, OWNER shall withhold five percent of the sum earned by the CONTRACTOR as contract retainage, from each progress payment. Progress payments shall be made within three (3) weeks from the date upon which the CONTRACTOR certifies that the work performed is substantially complete, as per the Contract Documents. Applications for Payment shall show the percentage of completion of each portion of the Work as of the end of the period covered by the Application for Payment, and shall be submitted in accordance with Article 9.3 of the attached General Conditions.

Said progress payments shall be calculated by determining the portion of the Contract Sum properly allocable to the completed Work. This shall be accomplished by (1) multiplying the percentage completion of each portion of the Work by the share of the Contract Sum allocated to that portion of the Work in the schedule of values, less retainage of five percent; (2) adding that portion of the Contract Sum properly allocable to materials and equipment delivered and suitably stored at the site for subsequent incorporation in the completed construction (or, if approved in advance by OWNER, suitably stored off the site at a location agreed upon in writing), less retainage of five percent; and (3) subtracting the aggregate of previous payments made by OWNER.

Alternatively, the Parties may negotiate a method for making progress payments in accordance with this Contract within the Contract Documents.

OWNER shall not be obligated to make progress payments for work that has not been accepted by OWNER, for the reason that the work has not been performed in a WORKMANLIKE FASHION, or fails to conform to the Contract Documents.

Final payment, constituting the entire unpaid balance of the Contract Sum, shall be made by OWNER to CONTRACTOR when the CONTRACTOR has fully performed the work and has submitted to OWNER an Affidavit of Prevailing Wages, as per RCW 60.28.011; final payment shall be made no later than 30 days after the issuance of the Architect's final Certificate of Payment and a resolution of the Board of the OWNER stating that final payment shall be made to the CONTRACTOR in satisfaction of this Contract.

VI. **DISPUTE RESOLUTION.** It is the intent of all Parties to this Contract that disputes, if any, between any of the Parties hereto shall be resolved as informally and amicably as possible by settlement, without the assistance of any outside professionals in dispute resolution, subject to Article 15.2 of the attached General Conditions. However, if such conciliation fails, the Parties agree that mediation may be used. If the Parties are unable to resolve the dispute through mediation, then an arbitrator shall be selected through the auspices of the American Arbitration Association, or any such entity providing arbitrators as the Parties may agree upon. The arbitration shall proceed, however, with a single arbitrator and with the Parties sharing the costs proportionately. Only if arbitration is unsuccessful or declared by a court to be inapplicable to the dispute shall the Parties proceed to Pierce County Superior Court.

Should either party prevail in Superior Court, or in any arbitration proceedings commenced under this Article VI, such prevailing party shall be awarded reasonable attorneys' fees and costs.

VII. MARKUPS AND OAC MEETINGS

Contractor's overhead and profit (markup) from changes in the Work enumerated herein shall be as provided for below notwithstanding any other language in the Contract Documents:

1. Contractor Markup on self-performed work. Markup for Contractor, for any work actually performed by Contractor's own forces, shall not exceed 10%;
2. Subcontractor Markup on subcontractor work. Markup for Subcontractors (including lower-tiered subcontractors), for any work actually performed by its own forces, shall not exceed 10%;
3. Contractor Markup for subcontractor work. Markup for Contractor for any work performed by its Subcontractor(s), shall not exceed 5%;
4. Subcontractor Markup for lower-tier subcontractor work. Markup for any Subcontractor, for any work performed by its subcontractors on any lower tier, shall not exceed 5%.

The total-summed Markup of Contractor for overhead and profit and all subcontractors of every tier shall not exceed 15%. If such Markup would otherwise exceed 15%, Contractor must reduce the markup percentage for the Contractor and all Subcontractors

applying markups, other than the Subcontractor actually performing the work.

Owner, Contractor, Owner's Representative and Architect will conduct meetings on the Project site ("OAC Meetings") on a weekly basis or as scheduled by the parties. Architect is responsible for circulating an agenda in advance, of each OAC Meeting and taking and circulating minutes for said meetings. Minutes may be circulated via email or by any other means mutually agreeable to the parties. Each party must review and provide their comments, if any, on said minutes within 48 business hours of circulation. Any comments must be rejected, accepted or modified within 72 business hours of the applicable OAC meeting for which the minutes were taken and circulated, after which time said minutes shall be deemed accurate, notwithstanding further objection to the minutes. Costs, pricing, scheduling, coordination, requests for information, proposed contract modifications and any outstanding Notices of Claims are among the topics which should be discussed at OAC meetings. However, any discussions of potential claims shall be no substitute for the claim-notification requirements set forth within the Contract Documents.

VIII. **TERMINATION OR SUSPENSION AND NOTICE.** Either Party may terminate or suspend this Contract in accordance with Article 14 of the General Conditions attached hereto.

Any notice required or desired to be served, given or delivered under this Contract shall be in writing and shall be deemed to have been validly served, given or delivered upon deposit in the United States mail by registered or certified mail with proper postage prepaid and addressed to the party to be notified. In addition to these required methods of providing notice, either party may also utilize electronic mail. However, electronic mail alone shall be insufficient to provide notice. Each party shall include the applicable address below the signature block hereof when giving any required notices. Said notices shall be sent to the following persons:

For the OWNER:

For the CONTRACTOR:

Neither the OWNER's representative nor the CONTRACTOR's representative shall be changed without ten days' written notice to the other Party.

IX. MISCELLANEOUS PROVISIONS

Hold Harmless. Both of the Parties which are signatories hereto, by executing this Contract, are deemed to hold harmless and indemnify the other Party for any negligence, errors or omissions of the indemnifying party. The indemnification and hold harmless is mutual with respect to any of the negligence, errors and omissions of either party, with respect to their own negligence, errors and omissions. Each party, therefore, remains solely liable for their own sole negligence, errors or omissions. Such indemnification extends not only to the actual party, but all employees, agents and volunteers acting on their behalf. The respective Parties to this Contract are not deemed to be agents of each other for purposes of this Contract.

No Third Party Beneficiaries. There shall be no third-party beneficiaries to this Contract, and this Contract may not be assigned without the written consent of both Parties except as provided in Article 13.1.2 in the General Conditions attached hereto.

Governing Law. This Contract shall be construed in accordance with Washington law, and the venue for any action in Superior Court arising out of this contract shall be Clallam County, Washington.

Good Faith. Each Party to this Contract hereby covenants that each shall practice good faith in the performance of this Contract, meaning that both Parties shall observe reasonable commercial standards of fair dealing.

Severability. Should any provision of this Contract be deemed unenforceable, the remaining provisions of this Contract shall remain in full force and effect.

Non-Waiver. The failure of either Party to insist upon strict performance of any provision of this Contract shall not impact that Party's right to insist upon strict performance at a later time.

X. **ENUMERATION OF CONTRACT DOCUMENTS.** The Contract Documents are as follows:

- This Contract;
- The Specifications for this Project, which include, but may not be limited to, the Bid Item Description provided by CONTRACTOR;
- Any Addenda, which must include, but may not be limited to, a statement of the CONTRACTOR's intent to pay prevailing wages, as required by RCW 39.12.040. No Addenda that conflict with or contradict this Contract shall be of any force and effect.
- A good and sufficient contractor's bond furnished by CONTRACTOR, as required by RCW 39.08.010;

- A retainage fund resolution, setting forth that the Board of Commissioners of OWNER hereby resolve to maintain a separate retainage account pursuant to RCW 60.28.011 during the performance of this Contract;
- Any Modifications to this Contract that are mutually agreed upon in writing by the Parties after execution of this Contract;
- The General Conditions of the Contract for Construction, AIA A201-2017, as revised and attached hereto;
- The Supplemental Conditions to this Contract, Section 007300, as revised and attached hereto; and
- The Drawings

XI. **INSURANCE AND BONDS.** Prior to performing any work in furtherance of this Contract, as per RCW 39.08.010, CONTRACTOR shall tender to OWNER a good and sufficient bond, with a surety company as a surety, which shall state the following: That CONTRACTOR (1) shall faithfully perform all provisions of the Contract; (2) pay all laborers, mechanics, and subcontractors and material suppliers, and all persons who supply such person or persons, or subcontractors; and (3) shall pay the taxes, increases, and penalties incurred on the project under Titles 50, 51, and 82 RCW.

CONTRACTOR shall procure and maintain, for the duration of the Contract, insurance against claims for injuries to persons or property which may arise from or in connection with the performance of the work hereunder by the CONTRACTOR, his agents, employees, representatives or contractors.

MINIMUM SCOPE AND LIMIT OF INSURANCE

Coverage shall be at least as broad as:

1. Commercial General Liability (CGL): Insurance Services Office (ISO) Form CG 00 01 covering CGL on an "occurrence" basis, including products and completed operations, property damage, bodily injury and personal and advertising injury with limits no less than $5,000,000 per occurrence. If a general aggregate limit applies, either the general aggregate limit shall apply separately to this project/location (ISO CG25 03 or 25 04) or the general aggregate limit shall be twice the required occurrence limit.
2. Automobile Liability. ISO Form CA 0001 covering Code 1 (any auto), with limits no less than $1,000,000 per accident for bodily injury and property damage.

3. Workers' Compensation insurance as required by the State of Washington, with Statutory Limits, and Employers' Liability insurance with a limit of no less than $1,000,000 per accident for bodily injury or disease.
4. Builder's Risk (Course of Construction) insurance utilizing an "All Risk" (Special Perils) coverage form, with limits equal to the completed value of the project and no coinsurance penalty provisions.
5. Surety Bonds as described below.
6. Contractors' Pollution Legal Liability and/or Asbestos Legal Liability and/or Errors and Omissions (if project involves environmental hazards) with limits no less than $5,000,000 per occurrence or claim, and $1,000,000 policy aggregate.

If the CONTRACTOR maintains broader coverage and/or higher limits than the minimums shown above, the OWNER requires and shall be entitled to the broader coverage and/or higher limits maintained by the CONTRACTOR. Any available insurance proceeds in excess of the specified minimum limits of insurance coverage shall be available to the OWNER.

Self-insured retentions must be declared to and approved by the OWNER. At the option of the OWNER, either the CONTRACTOR shall cause the insurer to reduce or eliminate such self-insured retentions as respects the OWNER, its officers, officials, employees, and volunteers; or the CONTRACTOR shall provide a financial guarantee satisfactory to the OWNER guaranteeing payment of losses and related investigations, claim administration, and defense expenses. The policy language shall provide, or be endorsed to provide, that the self-insured retention may be satisfied by either the named insured or the OWNER.

Other Insurance Provisions

The insurance policies are to contain, or be endorsed to contain, the following provisions:

1. The OWNER, its officers, officials, employees, and volunteers are to be covered informally as additional insureds on the CGL policy with respect to liability arising out of work or operations performed by or on behalf of the CONTRACTOR including materials, parts or equipment furnished in connection with such work or operations and automobiles owned, leased, hired, or borrowed by or on behalf of the CONTRACTOR. General liability coverage can be provided in the form of an endorsement to the CONTACTOR's insurance (as least as broad as ISO Form CG 20 10, CG 11 85 or **both**; CG 20 10, CG 20 26 , CG 20 33, or CG 20 38; **and** CG 20 37 forms if later revisions used).
2. For any claims related to this project, the CONTRACTOR's insurance coverage shall be primary, insurance coverage at least as broad as CG 20 01 04 13 as respects the OWNER, its officers, officials, employees, and volunteers. Any insurance or self-insurance

maintained by the OWNER, its officers, officials, employees or volunteers shall be in excess of the CONTRACTOR's insurance and shall not contribute with it.

3. Each insurance policy required by this clause shall provide that coverage shall not be canceled, except with notice to the OWNER.

Builder's Risk (Course of Construction) Insurance
CONTRACTOR may submit evidence of Builder's Risk insurance in the form of Course of Construction coverage. Such coverage shall name the OWNER as the loss payee as their interest may appear.

Claims Made Policies (if at all possible avoid and require occurrence type CGL policies)
If any coverage required is written on a claims-made coverage form:

1. The retroactive date must be shown, and this date must be before the execution date of the contract or the beginning of contract work.
2. Insurance must be maintained, and evidence of insurance must be provided, for at least five (5) years after completion of the contract work.
3. If coverage is canceled or non-renewed, and not replaced with another claims-made policy form with a retroactive date prior to the effective contract date or the start of work date, the CONTRACTOR must purchase extended reporting period coverage for a minimum of five (5) years after completion of contract work.
4. A copy of the claims reporting requirements must be submitted to the OWNER for review.
5. If the services involved lead-based paint or asbestos identification/remediation, the CONTRACTOR's Pollution Liability policy shall not contain lead-based paint or asbestos exclusions. If the services involve mold identification/remediation, the CONTRACTOR's Pollution Liability policy shall not contain a mold exclusion, and the definition of Pollution shall include microbial matter, including mold.

Acceptability of Insurers

Insurance is to be placed with insurers authorized to conduct business in the state with a current A.M. Best rating of no less than A: VII, unless otherwise acceptable to the OWNER.

Waiver of Subrogation

CONTRACTOR hereby agrees to waive rights of subrogation which any insurer of CONTRACTOR may acquire from CONTRACTOR by virtue of the payment of any loss. **CONTRACTOR** agrees to obtain any endorsement that may be necessary to affect this waiver of subrogation. **The Worker's Compensation policy shall be endorsed with a waiver of**

subrogation in favor of the OWNER for all work performed by the CONTRACTOR, its employees, agents and subcontractors.

Verification of Coverage

CONTRACTOR shall furnish the OWNER with original Certificates of Insurance including all required amendatory endorsements (*or* copies of the applicable policy language effecting coverage required by this clause) and a copy of the Declarations and Endorsement Page of the CGL policy listing all policy endorsements to OWNER before work begins. However, failure to obtain the required documents prior to the work beginning shall not waive the CONTRACTOR's obligation to provide them. The OWNER reserves the right to require complete, certified copies of all required insurance policies, including endorsements, required by these specifications, at any time.

Subcontractors

CONTRACTOR shall require and verify that all subcontractors maintain insurance meeting all the requirements stated herein, and CONTRACTOR shall ensure that OWNER is an additional insured on insurance required from subcontractors. For CGL coverage, subcontractors shall provide coverage with a form at least as broad as CG 20 38 04 13.

Surety Bonds

CONTRACTOR shall provide the following surety bonds:

1. Bid Bond;
2. Performance Bond;
3. Completion Bond;
4. Payment Bond; and
5. Maintenance Bond

The Payment Bond and Performance Bond shall be in a sum equal to the Contract price. If the Performance Bond provides for a one-year warranty, a separate Maintenance Bond is not necessary. If the warranty period specified in the contract is no longer than one year, a Maintenance Bond equal to 10% of the Contract price is required. Bonds shall be duly executed by a responsible corporate surety, authorized to issue such bonds in the State of Washington.

Special Risks or Circumstances

The OWNER reserves the right to modify these requirements, including limits, based on the nature of the risk, prior experience, insurer, coverage, or other circumstances.

EXECUTED this _____Day of _____2024:

OWNER	CONTRACTOR
_____	_____
Printed Name, Title and Date	Printed Name, Title and Date
Address:	Address:

SECTION 007213 – GENERAL CONDITIONS OF THE CONTRACT

PART 1 - GENERAL

1.1 STANDARD FORM

The General *Conditions of the Contract for Construction*, AIA Document A201-2017, is included as part of the Contract BY THIS REFERENCE ONLY; it is not bound in Project Manual. The Contractor and all subcontractors shall read and be governed by them.

1.2 AVAILABILITY

Copies may be obtained from American Institute of Architects, 1735 New York Avenue NW, Washington, D.C. 20006, or local Chapter offices.

1.3 CONFLICTS

In event of conflicts in the Contract Documents, including conflicts between referenced General Conditions and other parts of the Project Manual and Drawings, the Architect reserves the right to determine which governs, and in what order or precedence. See Article 3 of General Conditions and Division 00 Section “Supplemental Conditions”.

PART 2 - PRODUCTS

NOT USED

PART 3 - EXECUTION

NOT USED

END OF SECTION

SECTION 007300 - SUPPLEMENTAL CONDITIONS

The following supplements modify, change, delete from, or add to the referenced "General Conditions of the Contract for Construction." Where any article of the General Conditions is Modified or any Paragraph, Subparagraph, or Clause is modified or deleted by Section 007300, the unaltered provisions of that Article, Paragraph, Subparagraph, or Clause remain in effect.
Modification to the General Conditions:

ARTICLE 1
CONTRACT DOCUMENTS

1.1.1 THE CONTRACT DOCUMENTS
Add the following new subparagraphs 1.1.1.1 and 1.1.1.2:
1.1.1.1 In the event of a conflict or discrepancy among or in the Contract Documents, interpretation shall be governed in the following priority:

1. Agreement (A-101)
2. Supplemental Conditions
3. General Conditions (A-201)
4. Addenda
5. Schedules
6. Drawings
7. Specifications
8. Instructions to Bidders and Accepted Bid

1.1.1.2 In the event of any inconsistencies, conflicts or ambiguities between the Contract Documents, or within an individual document not clarified by addendum, the resolution of such inconsistencies, conflict or ambiguity shall be provided in accordance with the Architect's interpretation. All conflicts are to be referred to the Architect for resolution and incorporation into a Contract Modification, if appropriate.

1.2 CORRELATION AND INTENT OF THE CONTRACT DOCUMENTS
Add the following new subparagraphs 1.2.1.1 and 1.2.1.2:
1.2.1.1 Such execution of the Contract also constitutes a representation by the Contractor that it can fully perform the Contract and deal with all issues arising out of the Contract Documents or conditions of the site of the Work for the Contract Amount. The failure of the Contractor fully to acquaint itself with any applicable condition or matter shall not in any way relieve the Contractor from the responsibility for performing the Work in accordance with the Contract Documents and within the Contract Time and the Contract Sum.
1.2.1.2 Contractor to make the following representation to Owner:

A. Contractor is financially solvent, able to pay its debts as they mature, and possesses sufficient working capital to complete the Work and perform Contractor's obligations required by the Contract Documents; and
B. Contractor is able to furnish the plant, tools, materials, supplies, equipment and labor required to complete the Work and perform the obligations required by the Contract Documents and has sufficient experience and competence to do so.

ARTICLE 2
OWNER

2.2 INFORMATION AND SERVICES REQUIRED OF THE OWNER

Delete subparagraph 2.2.5 and substitute the following:

2.2.5 The Contractor will be furnished free of charge 5 copies of Drawings and Project Manuals. Additional sets will be furnished at the cost of reproduction, postage and handling.

Add the following new subparagraphs 2.5 through 2.5.1:

2.5 OWNER'S RIGHT AND RESPONSIBILITES

2.5.1 The Owner will not have control over or charge of and will not be responsible for construction means, methods, techniques, sequences or procedures, or for safety precautions and programs in connection with the Work, since these are solely the Contractor's responsibility as provided in Paragraph 3.3. The Owner will not be responsible for the Contractor's failure to carry out the Work in accordance with the Contract Documents. The Owner will not have control over or charge of and will not be responsible for acts or omissions of the Contractor, Subcontractors, or their agents or employees, or of any other persons performing portion of the Work.

ARTICLE 3
CONTRACTOR

3.3 SUPERVISION AND CONSTRUCTION PROCEDURES

Add the following to subparagraph 3.3.1:

3.3.1 If the Contractor has any concerns, objections or reservations concerning such specific instructions, the Contractor must raise and resolve such issues with the Architect and the Owner prior to performing such specific instructions.

3.4 LABOR AND MATERIALS

Add the following to subparagraph 3.4.3:

3.4.3 At no change to the Contract Sum or Contract Time, the Owner may provide written notice requiring the Contractor to remove from the Work any employee, subcontractor employee, or other person carrying out the Contract whom the Owner reasonably considers objectionable.

Add the following subparagraph 3.4.4 through 3.4.4.6:

3.4.4 PREVAILING WAGES

3.4.4.1 The Washington State Department of Labor and Industries Prevailing Wage Rates are part of the Contract.

3.4.4.2 Copies of the Washington State Department of Labor and Industries Prevailing Wage Rates are bound in the Project Manual for reference and convenience only. It is the Contractor's responsibility to follow the most current edition.

3.4.4.3 No worker may be paid less than the prevailing minimum hourly wage rate established by the State Department of Labor and Industries. Statements of Intent to Pay Prevailing Wages and Affidavits of Wages Paid are required. The Contractor shall fully comply with all current applicable labor laws and regulations, including without limitation

RWC Chapters 39.12 (Prevailing Wages); 49.28 (Hours of labor); and 49.70 (Worker Right to Know).

3.4.4.4 Any fabricator or manufacturer that produces nonstandard items and is considered by the Department of Labor and Industries as a contractor must comply with all of the requirements of RCW 39.12, including but not limited to the filing of the "Statement of Intent to Pay Prevailing Wages" and "Affidavit of Wages Paid" with the Department of Labor and Industries Industrial Statistician.

3.4.4.5 The Owner reserves the right to perform wage rate interviews and/or require Contractor submission of certified payrolls for all Contractor and Subcontractor personnel.

3.4.4.6 Contractor shall provide Owner with copies of the Intent to Pay Prevailing Wage forms as filed with the State of Washington for the contractor's forces and for all subcontractors.

3.6 TAXES

Change subparagraph 3.6 to read:

3.6 The Contractor shall pay all applicable State and Local Sales, Consumer, Use and other similar taxes for Work or portions thereof provided by the Contractor. The Owner shall include these taxes in his payments to the Contractor who shall pay the taxes to the proper authorities in accordance with the applicable laws and regulations governing this project. Sales tax will not be included in bid amount.

3.7 PERMITS, FEES, NOTICES, AND COMPLIANCE WITH LAWS

Delete subparagraph 3.7.1 and substitute the following:

3.7.1 The **Owner** shall secure and pay for the **Plan Review Fees**, **Building Permit**, **and (where applicable) L&I Electrical Plan Review Fees.** The Contractor shall secure and pay for all other permits and governmental fees, licenses and inspections necessary for proper execution of and completion of the Contract which are legally required when bids are received.

3.9 SUPERINTENDENT

Add the following to subparagraphs 3.9.3:

During the construction period should the initial superintendent fall ill, retire, be laid off or terminated employment, the Owner reserves the right to review and accept the replacement as stated above.

Add the following subparagraph 3.9.4:

3.9.4 The Superintendent shall remain on the Project whenever Subcontractors are present unless the job is closed down due to a legal holiday, a general strike, conditions beyond the control of the Contractor, termination of the Contract in accordance with the Contract Documents, or Final Completion is attained.

3.10 CONTRACTOR'S CONSTRUCTION SCHEDULE

Change this entire paragraph 3.10 to read:

4 Within (**5)** calendar days following Notice to Proceed, the Contractor shall submit to the Owner and the Architect for review and comment, three copies of a CPM Schedule in form satisfactory to the Owner for Contractor's construction/erection of the Work. The

initial and any revisions of the Project Schedule shall be prepared and submitted in paper form. With each approved monthly payment request, provide an updated Progress Schedule. Not less than 5% (in retention) of Progress Payments to the Contractor may be withheld by the Owner until such initial and updated Progress Schedules have been timely submitted for review by the Owner and the Architect.

4.9.1 The Project Schedule shall consist of a network diagram with activity descriptions and durations and supporting data which will explain the Contractor's planning of the work. Contractor shall provide, if requested by Owner, cost allocation and resource estimates for each activity.

4.9.1.1 The CPM Schedule diagram shall include:

(a) The order and interdependence of the Contractor's activities and the major points of the interface or interrelation with the activities of others, including Specific Dates for completion.
(b) Conformance with and identification of the Specific Dates specified in the Contract Documents.
(c) The descriptions of work by activity.
(d) The time required for preparation, and review of shop drawings, mock-ups, manufacturing, and delivery of Contractor-furnished permanent plant materials, especially long lead items.
(e) Critical Path (or Paths).
(f) Testing of equipment and materials. The CPM Schedule shall provide a complete and detailed sequence of operations of the Work within the time limits specified in the Contract.

4.9.1.2 The identity and duration of all activities to be included in this CPM Schedule shall meet the following criteria:

(a) Activity descriptions shall be clear and concise. The beginning and end of each activity shall be readily verifiable.
(b) Responsibility for each activity shall be identified with a single performing organization.
(c) The identity of any potential problems or constraints related to the implementation of the overall construction plan.

4.9.1.3 A schedule for the purchase of items required for performance of the Work, showing lead items between purchase order placement and delivery dates, shall be integrated with the Progress Schedule upon request of the Owner. The Contractor shall furnish the Architect with copies of all purchase orders and acknowledgements and fabrication, production, and shipping schedules for all major items on the critical path within 10 days of Contractor's receipt of each purchase order, acknowledgment or schedule. Neither the Architect nor the Owner shall be deemed to have approved or accepted any such material, or its schedule, nor deemed to have waived this requirement if some or all of the material is not received.

4.9.2 The CPM Schedule shall indicate an early completion date for the project that is not later than the project's required completion date. All activity durations shall be given in calendar days. The CPM Schedule shall also indicate each of the following:

(a) Interfaces with the work of outside contractors, e.g., utilities, power, and with any separate contractor.
(b) Descriptions of activity including activity numbers.
(c) Estimated duration time for each activity.
(d) Early start date for each activity.
(e) Late start date for each activity.
(f) Early finish date for each activity.
(g) Late finish date for each activity.
(h) Float available for each batch of activities containing float.

(i) Actual start date for each activity begun.
(j) Actual finish date for each activity completed.
(k) Identification of all Critical Path activities in the mathematical analysis.
(l) The Critical Path for the project, with said path of activities being clearly and easily recognizable on the time-scaled CPM Schedule Diagram. The relationship between all non-critical activities and activities on the Critical Path shall be clearly shown on the CPM Schedule Diagram.

4.9.3 It is to be expressly understood and agreed by the Contractor that the schedule is an estimate to be revised from time-to-time as progress proceeds, and that the Owner does not guarantee that Contractor can start work activities on the "early start" or "late start" dates or complete work activities on the "early finish' or "late finish" date shown in the Schedule, or as same may be upgraded or revised; nor does the Owner guarantee that Contractor can proceed at all times in the sequence established by said Schedule. If Contractor's schedule indicates that Owner or separate contractor is to perform an activity by a specific date, or within a certain duration, Owner or any separate contractor under contract with the Owner shall not be bound to said date or duration unless Owner expressly and specifically agrees in writing to same; the Owner's or the Architect's overall review and approval or acceptance of the Schedule does not constitute an agreement to specific dates, durations or sequences for activities of the Owner of any separate contractor.

4.9.4 Should any of the conditions exist such that certain activities shown on the Contractor's CPM Schedule fall behind schedule to the extent that any of the specific dates are in jeopardy, the Contractor shall be required to, at no extra cost to the Owner, prepare and submit to the Owner a supplemental Recovery Schedule, in a form and detail appropriate to the need, to explain and display how he intends to reschedule those activities to regain compliance with the CPM Schedule during the immediately subsequent pay period.

4.9.5 The Contractor shall do the following after determination of the requirement for a Recovery Schedule:

(a) Within three (3) calendar days, the Contractor shall submit a Recovery Schedule to the Owner for review. The Recovery Schedule shall be prepared to a similar level of detail as the CPM Schedule and shall have a maximum duration of one (1) month.
(b) Any revisions necessary as a result of this review shall be resubmitted by the Contractor with any necessary revisions for acceptance within two (2) calendar days of the review. The approved Recovery Schedule shall then be the Schedule which the Contractor shall use in planning, organizing, directing, coordinating, performing and executing the Work (including all activities of subcontractors, equipment vendors, and suppliers) for its one (1) month duration, to regain compliance with the CPM Schedule.

4.9.6 Should the Contractor, after approval of the initial CPM Schedule desire to change his plan of construction, he shall submit his requested revisions to the Owner including a description of the logic for rescheduling the work, methods of maintaining adherence to Intermediate Milestones and Specific Dates. The Contractor shall revise his Schedule to include the effect of changes, acts of God or other conditions or events which have affected the CPM Schedule, If the requested changes are acceptable to the Owner, they will be incorporated by the Contractor into the CPM Schedule in the next reporting period. The resultant cost to the Owner for significant changes or a significant number of changes to the CPM Schedule shall be paid for by the Contractor.

4.9.7 When the Owner orders changes by Change Order which have the potential to impact the Contract Milestones or Specific Dates stipulated, a Network will be prepared by the Contractor and provided to the Project Manager. After the Network has been accepted by the Owner, it will be incorporated into the CPM Schedule by the Contractor.

4.9.8 Failure of the Contractor to substantially comply with any of the scheduling requirements

of this Contract at no cost to the Owner shall constitute cause that the Contractor is failing to prosecute the Work with such diligence as will insure its completion within the Contract times and shall be considered cause for termination by the Owner, pursuant to Article 14 of the General Conditions; and may also result in the Owner's withholding of Progress Payment(s) until the Contractor complies.

4.9.9 Float time is defined as the amount of time between earliest start date and the latest start date or between the earliest finish date or the latest finish date of a chain of activities on the CPM Schedule. Float time is not for the exclusive use or benefit of either the Contractor of the Owner. Contractor's work shall proceed according to start dates, and the Owner shall have the right to reserve and apportion float time according to the needs of the project. The Contractor acknowledges and agrees that actual delays, affecting paths of activities containing float time, will not have any effect upon Contract Completion times, providing that the actual delay does not exceed the float time associated with those activities. Extensions of time for performance as described in the Contract Documents will be granted only to the extent that time adjustments for the activity or activities affected by any condition or event which entitles the Contractor to a time extension exceeds the total float or slack time along the actual critical path of activities affected at the time of Notice to Proceed of a Change Order or the commencement of any delay, claim or condition for which an adjustment is claimed or warranted under the Contract Documents.

4.9.10 The Schedule Duration shall be based on the Contract Time of Completion listed on the Bid Form. The Owner shall not be obligated to accept any Early Completion Schedule suggested by the Contractor. The Contract Time for Completion shall establish the Schedule Completion Date. If the Contractor feels that the work can be completed in less than the Specified Contract Time, then the Surplus Time shall be considered Project Float. This Float time shall be shown on the Project Schedule. It shall be available to accommodate changes in the work and unforeseen conditions. Neither the Contractor nor the Owner have exclusive right to this Float Time. It belongs to the project.

4.10 DOCUMENTS AND SAMPLES AT THE SITE

Add the following new subparagraphs 3.11.1 and 3.11.2:

4.10.1 In addition, the Contractor shall keep the approved permit set of plans at the jobsite during construction, in good condition. Prior to final acceptance, the Contractor shall deliver this permit set to the Architect.

4.10.2 Satisfactory maintenance of up-to-date record drawings will be a requirement for approval of monthly Progress Payments.

ARTICLE 5
SUBCONTRACTORS

5.3 SUBCONTRACTUAL RELATIONS

Add the following new subparagraph:

5.3.1 The Contractor shall schedule, supervise and coordinate the operations of all Subcontractors. No subcontracting of any of the Work shall relieve the Contractor from its responsibility for the performance of the Work in accordance with the Contract Documents or from its responsibility for the performance of any other of its obligations under the Contract Documents.

ARTICLE 6
CONSTRUCTION BY OWNER OR BY SEPARATE CONTRACTORS

6.2 MUTUAL RESPONSIBILITY

Add the following to paragraph:

6.2.1 If the Contractor receives items from a separate contractor or from the Owner for storage, erection or installation, the Contractor shall acknowledge receipt for items delivered, and thereafter will be held responsible for care, storage and any necessary replacement of item or items received.

At subparagraph 6.2.4, delete the word "wrongfully."

ARTICLE 7
CHANGES IN THE WORK

7.2 CHANGE ORDERS

Add the following paragraphs 7.2.2 through 7.2.5:

7.2.2 Change proposal disagreements shall be submitted by the Contractor to the Architect in a form satisfactory to the Owner for such submittals. The total cost of any change, including a claim shall be limited to the reasonable value thereof, to be determined in the following manner:

7.2.3 ADDITIVE CHANGES:

1a. Direct Labor Costs: This is defined as the estimated labor costs determined by either the estimated number of craft hours and the hourly costs necessary to perform the change in work; or the unit labor costs necessary to perform the change in work; or the unit labor costs applied to the material quantities, provided said unit labor costs are developed from the above craft man hour cost; whichever is applicable, according to industry practice. The hourly cost shall be based on the following:

1. Basic Wages: Current minimum prevailing hourly wage rates, including vacation pay, for all labor, crew foreman, and general foreman performing and/or directly supervising the work on site. These rates, whichever are applicable, are established by the State of Washington, Department of Labor and Industries.
2. Fringe Benefits: Fringe benefits established by the State of Washington, Department of Labor and Industries or contributed to labor trust funds as itemized fringe benefits, whichever is applicable.
3. Worker's Insurance: Direct contributions to the State of Washington as Industrial Insurance; Medical Aid; and Supplemental Pension, by the class and rates established by the State of Washington, Department of Labor and Industries.
4. Federal Insurance's: Direct contributions required by the Federal Insurance Compensation Act (FICA); Federal Unemployment Tax Act (FUTA); and the State Unemployment Compensation Act (SUCA).
5. Costs incurred by the Washington Industrial Safety and Health Act (WISHA); established as 2% of 1, 2, 3, and 4 above.
6. Travel allowances and/or subsistence if applicable not to exceed those established by Regional Labor Union Agreements shall be itemized and identified separately

1b. Direct Material Costs: This is defined as an itemization of the estimated quantity of materials necessary to perform the change in the work and the cost thereof. These costs shall be by the unit cost applied to the quantity and extended. The unit costs shall be based on the following:
   1. The net costs after all offered or available discounts or rebates.
   2. Freight costs; express charges; or special delivery costs when applicable.

   No lump sum costs will be allowed except when approved in advance by the Architect

1c. Construction Equipment Usage Costs:
   1. Rental Equipment: This is defined as an itemization of and the estimated length of time construction equipment will be used on change order work at the site. The rental costs applied thereof will be the rates established by the following whichever is applicable:
      a) The current hourly rental rates established by agreement between the Associated General Contractors (AGC) and Washington State Department of Highways.
      b) The current rental rates established by the State of Washington, utilities and Transportation Commission for trucks used on highways.
      c) The current rental rates established by the National Electrical Contractor's Association (NECA) for equipment used on electrical work.
      d) The current rental rates established by the mechanical Contractor's Association for equipment used on mechanical work.
      e) If equipment is required for which a rental rate is not established in any of the above, an agreed rental rate shall be established for that equipment. Such rates and the use of the equipment on the work must be approved by the Architect prior to performing the work.
      f) The rates in effect at the time of performance of the work are the maximum rates allowable for equipment of modern design and in good working condition and include full compensation for furnishing all fuel, oil, lubrication, repairs, maintenance, and insurance.
   2. Small Tools, Expendable and Consumable Supplies:
      a) These are general in nature and are defined as tools for which the initial purchase price is under $250 and are normally furnished by the performing contractor.
      b) The allowable rate for small tools will be:
         - General Contractors, 3% direct labor costs
         - Specialty Contractors, 5% direct labor costs
      c) Expendable and consumable supplies directly associated with the change in work to be itemized.

1d. Subcontractor Proposals: Subcontractors' proposals are to be itemized as in 1a, 1b, and 1c above.

1e. Overhead and Profit by the Contractor Actually Performing the Work: A total amount, not to exceed 10% of items 1a, 1b, and 1c above will be allowed. This is to compensate such contractor for all personnel not defined in 1a above; temporary construction facilities; home office costs; office architecting and estimating costs; profit, and any other cost incidental to the performance of the change in work.

1f. Overhead and Profit by the Contractor and Subcontractor when Subcontractor actually performs the Work:
   1. A total amount not to exceed 8% of the total amount of subcontractors proposal as defined in 1d above will be allowed to the Contractor for all overhead and profit to supervise and administer the subcontractors actually performing the change in

the work. The Subcontractor doing the work will be allowed no more than 10%. Lower tier sub-subcontractors will be allowed no more than 7%.

2. No direct costs of the Contractor will be allowed to be added to a subcontractor's proposal. Contractor's direct cost, if required, must be submitted as outlined in 1a, 1b, 1c and 1g.

1g. Cost of Any Increase or Decrease in Premium for Insurance and Bond Caused by the Change:

1. Contractor's Liability Insurance: To the above, the costs of the Contractor's Liability Insurance may be increased or decreased.
2. Bond: To the above, the cost of the Contractor's Bond may be increased or decreased.

7.2.4 DEDUCTIVE CHANGES

2a. Items 1a (labor), 1b (material), 1c (equipment), 1d (subcontractor), 1e (overhead and profit, Contractor), 1f (overhead and profit, subcontractor), 1g (insurance and bond) will be itemized for deleted changes in the work.

7.2.5 ADDITIVE CHANGES AND DEDUCTIVE CHANGES TOGETHER

3a. If a change in the work involves both additive and deductive changes, the appropriate overhead and profit amount allowed will be added to the net difference of items 1a, 1b, 1c, and 1d.

3b. If other additive unrelated changed items are included in the same change proposal, the appropriate overhead and profit allowed is to be applied to these individual change items.

ARTICLE 8
TIME

8.2 PROGRESS AND COMPLETION

Add the following new subparagraphs 8.2.4 and 8.2.5:

8.2.4 The Contractor shall furnish such manpower, materials, facilities, and equipment and shall work such hours, including night shifts, overtime operations and Sundays and holidays, as may be necessary to insure the progress and completion of the Work in accordance with the approved and currently updated Progress Schedule. If work actually in place falls behind the currently updated and approved Progress Schedule and it becomes apparent from the current schedule that the Work will not be completed within the Contract Time, the Contractor agrees that he will, as necessary, take some or all of the following actions at no additional cost to the Owner, as required to substantially eliminate tardiness of Work:

1. Increase the manpower in such quantities and crafts as will substantially eliminate, in the opinion of the Owner, the backlog of Work.
2. Increase the number of working hours per shift, shifts per working day, working days per week, or the amount of equipment, or any combination of the foregoing sufficiently to substantially eliminate, in the opinion of the Owner, the backlog of Work; and
3. Reschedule activities to achieve maximum practical concurrency of accomplishment of activities.

8.2.5 The Contractor and Owner acknowledge and contemplate that delay in substantial completion and final completion will cause the Owner substantial damages which are difficult to determine precisely. To the extent the Owner is unable to beneficially occupy each of the facilities which are the subject of this Contract, the Owner is expected to experience damages and costs including but not limited to the following: Loss of use of the facility; the costs of

delayed move-in and the disruption of Owner activities and schedule; and rescheduling and shift changes to paid personnel. The parties therefore agree that the following sums of liquidated damages shall be paid to the Owner (or the Owner may withhold payments otherwise due to the Contractor) in liquidation of these difficult to measure damages and/or delay costs reasonably anticipated as a result of delays beyond the dates as established in the Contract, as they may be extended by agreement of the parties by change order during the course of the project:

SUBSTANTIAL COMPLETION: For each calendar day after the date fixed for Substantial Completion and until Substantial Completion of the facilities, the Contractor shall pay the Owner the sum of **two hundred fifty dollars ($250) per day**. The Owner shall not be required to accept Substantial Completion of anything less than the entirety of the project but shall have the option to do so. This sum is to be fixed, agreed, liquidated damages and not to be construed as in any sense a penalty.
FINAL COMPLETION: Actual damages will be assessed for failure to achieve Final Completion within **(30)** days after Substantial Completion. Actual damages will be calculated on the basis of direct architectural, administrative, and other related costs attributed to the Project from the date when Final Completion should have been achieved, to the date Final Completion is actually achieved. Owner may offset these costs against any payment due to the Contractor by reduction in retainage.

8.3 DELAYS AND EXTENSIONS OF TIME

Change subparagraph 8.3.3 to read:
8.3.3 Except as provided in this subparagraph, the Contractor's sole remedy for delays shall be an extension of time. Except for unreasonable delays in performance caused by the acts or omissions of the Owner, the Contractor shall not be entitled to damages, extra compensation or equitable adjustment for direct, indirect or impact damages for delay, including but not limited to cost of acceleration, home office overhead or lost profits. All claims for damages or extensions of time are subject to the requirements of Article 15. In the event the Contractor is entitled to damages from the Owner for delay, it is agreed that the Contractor's sole damages for each day of delay shall be limited to the daily liquidated damage rate provided for the Owner in subparagraph 8.2.5 above.

ARTICLE 9
PAYMENT AND COMPLETION

9.3 APPLICATIONS FOR PAYMENT

Add the following new subparagraph:
9.3.1.3 Until Substantial Completion, the Owner shall pay 95 percent of the amount due the Contractor on account of progress payments.
Add the following new subparagraph:
9.3.4 If authorized by the Owner, the Application for Payment may include request for payment for material delivered to the Project site and suitably stored, or for completed preparatory work. Payment may similarly be requested, subject to Owner's approval, for material stored off the Project site, provided the Contractor complies with or furnishes satisfactory evidence of the following:

1. The material will be placed in a warehouse that is structurally sound, dry, lighted and suitable for the materials to be stored;

2. The warehouse is located within a 25-mile radius of the project. Other locations may be utilized, if approved in writing, by Owner;
3. Only materials for the Project are stored within the warehouse (or a secure portion of a warehouse set aside for the Project);
4. Contractor furnishes Owner a certificate of insurance extending Contractor's insurance coverage for damage, fire, and theft to cover the full value of all materials stored, or in transit;
5. The warehouse (or secure portion thereof) is continuously under lock and key, and only Contractor's authorized personnel shall have access;
6. Owner shall at all times have the right of access in company of the Contractor;
7. Contractor and its surety assume total responsibility for the stored materials; and
8. Contractor furnishes to Owner certified lists of materials stored, bills of lading, invoices, and other information as may be required, and shall also furnish notice to owner when materials are moved from storage to the Project site.

9.5 DECISIONS TO WITHHOLD CERTIFICATION

Add the following to subparagraph 9.5.1:

The Architect may also decide not to certify payment or, because of subsequently discovered evidence or subsequent observations, may nullify the whole or part of a Certificate for Payment previously issued, or the Owner may refuse to process an application for payment to such extent as may be necessary in the Owner's or Architect's opinion to protect the Owner from loss because of:

Add the following new subparagraphs 9.5.1.8 through 9.5.1.12:

9.5.1.8 Unsatisfactory prosecution of the Work by the Contractor, including but not limited to failure to carry out the Work in accordance with the Contract Documents.

9.5.1.9 Failure or refusal of the Contractor to fully comply with requirements in the Contract Documents for preparation and submission of scheduling of the Work and updates thereof, or failure to present statements of Intents or Affidavits pertaining to prevailing wages paid as may be required by statue.

9.5.1.10 Liquidated damages.

9.5.1.11 Failure to provide adequate security measures to protect materials stored on site for which the Contractor is seeking payment for.

9.5.1.12 Failure to provide evidence that the performance and payment bonds have been increased to equal the sum of Change Orders.

9.6 PROGRESS PAYMENTS

Add the following new subparagraphs 9.6.8 through 9.6.13:

9.6.8 Upon Commencement of the Work and at the option of the Contractor, an escrow account may be established by the Contractor in a financial institution chosen by the Contractor and approved by the Owner.

9.6.9 The escrow agreement shall provide that the financial institution will act as escrow agent, will pay interest on funds deposited in such account in accordance with the provisions of the escrow agreement and will disburse funds from the account upon the direction of the Owner as set forth below. Compensation to the escrow agent for establishing and maintaining the escrow account shall be paid from interest accrued in the escrow account.

9.6.10 As each progress payment is made, the retainage with respect to that payment shall be deposited by the Owner in the escrow account.

9.6.11 The interest earned on funds in the account shall accrue for the benefit of the Contractor until the substantial completion date named in the Construction Contract or the expiration of any

authorized extension of such date. Interest earned after such date shall accrue for the benefit of the Owner. Cost of compensation to the escrow agent paid out of interest earned shall be borne by the Contractor.

9.6.12 When the Contractor has fulfilled all of the requirements of the Contract providing for reduction of retained funds, the escrow agent shall release to the Contractor one-half of the accrued funds but none of the interest thereon. When the Work has been fully completed in a satisfactory manner and the Architect has issued a final Certificate for Payment, the escrow agent shall pay to the Contractor the full amount of funds remaining in the account, including net balance of the interest paid to the account, but less any interest that may have accrued for the benefit of the Owner, which shall be paid to the Owner.

9.6.13 If, after Substantial Completion of the Work, final completion thereof is materially delayed through no fault of the Contractor, the escrow agent shall make payment to the Contractor as provided in Subparagraph 9.10.3

9.8 SUBSTANTIAL COMPLETION

Change subparagraph 9.8.1 to read:

9.8.1 Substantial Completion is the stage in the progress of the Work (or portion thereof designated and approved by the Architect and Owner) when the construction is sufficiently complete, in accordance with the Contract Documents, so the Owner can fully occupy under necessary permits the Work (or portion thereof designated by the Owner) for the use for which it is intended. All Work other than incidental corrective or punch list work and final cleaning shall have been completed.

Add the following new subparagraph:

9.8.6 The acceptance of Substantial Completion payment shall constitute a waiver of all claims by the Contractor except those previously made in writing and identified by the Contractor as unsettled at the time of the application for payment for the Substantial Completion payment, and except for the Contract Sums due at Final Acceptance.

9.10 FINAL COMPLETION AND FINAL PAYMENT

Add the following to this subparagraph 9.10.1:

The Architect's final Certificate of Payment shall establish the date of Final Completion. If the Contractor notifies the Architect that the punch list items are completed and requests an inspection to determine compliance, and the Architect determines that some or all the punch list items are not completed, the Contractor shall be responsible to the Owner for all costs, including Architect's fees, for any future Architect's inspections after the first inspection to determine subsequent compliance with the punch list.

ARTICLE 10
PROTECTION OF PERSONS AND PROPERTY

Add the following new subparagraph10.2.8:

10.2.8 At all times until final acceptance of the Work, the Contractor shall protect from damage, weather, deterioration, theft, vandalism, and, malicious mischief all materials, equipment, tools, and other items incorporated or to be incorporated in the Work, or consumed or used in the performance of the Work, and all Work in process and completed Work.

ARTICLE 11
INSURANCE

11.1 CONTRACTOR'S LIABILITY INSURANCE

Add the following new subparagraphs 11.1.1.9 and 11.1.1.10:

11.1.1.9 Liability Insurance shall include all major divisions of coverage and be on a comprehensive basis including:

1. Premises operations (including X, C and U coverage's as applicable).
2. Independent Contractors' Protective.
3. Products and Completed Operations.
4. Personal Injury Liability with Employment Exclusion deleted.
5. Contractual, including specified provision for Contractor's obligation under Paragraph 3.18.
6. Owned, non-owned and hired motor vehicles.
7. Broad Form Property Damage including Completed Operations.

11.1.1.10 If the General Liability coverage's are provided by a Commercial General Liability Policy on a claims-made basis, the policy date or Retroactive Date shall predate the Contract; the termination date of the policy or applicable extended reporting period shall be no earlier than the termination date of coverage's required to be maintained after final payment, certified in accordance with Subparagraph 9.10.2.

Add the following subparagraph 11.1.2.1:

11.1.2.1 The insurance required by Subparagraph 11.1.1 shall be written for not less than the following limits, or greater if required by law:

1. Worker's Compensation:

(a) State:	Statutory
(b) Applicable Federal:	Statutory
(c) Employer's Liability	$100,000 per Accident

Comprehensive or Commercial General Liability (including Premises-operations; Independent Contractors' Protective; Products and Completed Operations; Broad Form Property Damage):

(a) Bodily Injury:

$1,000,000	Each Occurrence
$2,000,000	Aggregate

(b) Property Damage:

$1,000,000	Each Occurrence
$2,000,000	Aggregate

(c) Products and Completed Operations to be maintained for a minimum period of 2 years after final payment.

(d) Property Damage Liability insurance shall provide Explosion, Collapse, and Underground coverage.

(e) Broad Form Property Damage Coverage shall include Completed Operations.

3. Contractual Liability:

(a) Bodily Injury:

$1,000,000	Each Occurrence
$2,000,000	Aggregate

(b) Property Damage:

$1,000,000	Each Occurrence
$2,000,000	Aggregate

4. Personal Injury, with Employment Exclusion deleted:
   $2,000,000 Aggregate
5. Business Auto Liability (including owned, non-owned and hired vehicles):
   (a) Bodily Injury:
   $1,000,000 Each Person
   $1,000,000 Each Occurrence
   (b) Property Damage:
   $1,000,000 Each Occurrence

Add the following subparagraphs 11.1.3.1 through 1.1.3.3:

11.1.3.1 The certificate of insurance shall name the Owner as "Additional Insured." Certificate is required at time contract is signed.

11.1.3.2 The Contractor shall provide an original of the executed insurance policy Endorsement to the Owner prior to commencement of the work.

11.1.3.3 Upon request of the Owner, the Contractor shall provide complete, certified copies of all required insurance policies.

11.4 PERFORMANCE AND PAYMENT BONDS

Delete Subparagraph 11.4.1 and substitute the following:

11.4.1 The Contractor shall provide bonds covering faithful performance of the Contract and payment of obligations arising thereunder. Bonds may be obtained through the Contractor's usual source and the cost thereof shall be included in the Contract Sum. The amount of each bond shall be equal 100 percent of the Contract Sum including all change orders and sales tax.

Add the following new subparagraphs:

11.4.1.1 The Contractor shall deliver the required bonds to the Owner no later than ten days following the Notice of Award and shall also be submitted with the signed and executed contract.

11.4.1.2 Bonds shall be obtained from companies holding certificates of authority as acceptable sureties pursuant to 31 CFR part 223.

11.4.1.3 Provide bonds executed by surety company or companies authorized to transact business in State in which the project is being constructed. Required form: Performance Bond and Payment Bond AIA-A312, March 1984. Bonding company as approved by Owner.

11.4.1.4 Provide originals of the executed bonds to the Owner, complete with original ink signatures and original stamps/embossing.

11.4.1.5 Provide proof of bond rider adjustments in the bond sum for Change Orders in conjunction with requests for progress payments.

Add the following paragraph 11.5:

11.5 HOLD HARMLESS STATEMENT

11.5.1 The Contractor agrees to defend, indemnify and save harmless the Owner, Architect, and their agents, and employees against any and all loss, damage, liability, claims, demands or costs resulting from injury or harm to persons or property (including, with limitation, the Contractor's employees or property) arising out of or in any way connected with Contractor's performance hereof, excepting only such injury or harm as may have been caused solely by the fault or negligence of the Owner, Architect, and their agents, and employees, and shall be deemed to include those of subcontractors.

ARTICLE 13
MISCELLANEOUS PROVISIONS

13.5 TESTS AND INSPECTIONS

Add the following new subparagraph:

13.5.7 No acceptance by the Owner of any Work shall be construed to result from any inspection, tests or failures to inspect by the Owner, the Owner's representative, the Architect or any other person. No inspection, test, failure to inspect or test, or failure to discover any defect or non conformity by the Owner, the Owner's representative, the Architect or any other person shall relieve the Contractor of its responsibility for meeting the requirements of the Contract Documents or impair the Owner's right to reject defective or nonconforming items or right to avail itself of any other remedy to which the Owner may be entitled, notwithstanding the Owner's knowledge of the defect or nonconformity, its substantially or the ease of discovery.

Add the following new paragraphs 13.8 through 13.8.1.2:

13.8 EQUAL OPPORTUNITY

13.8.1 The Contractor shall maintain policies of employment as follows:

13.8.1.1 The Contractor and the Contractor's Subcontractors shall not discriminate against any employee or applicant for employment because of race, religion, color, sex, marital status, physical and mental disabilities, or national origin. The Contractor shall take affirmative action to insure that applicants are employed, and that employees are treated during employment without regard to their race, religion, color, sex or national origin. Such action shall include, but not be limited to, the following: employment, upgrading, demotion or transfer; recruitment or recruitment advertising; layoff or termination; rates of pay or other forms of compensation; and selection for training, including apprenticeship. The Contractor agrees to post in conspicuous places, available to employees and applicants for employment, notices setting forth policies of nondiscrimination.

13.8.1.2 The Contractor and the Contractor's Subcontractors shall, in all solicitations or advertisements for employees placed by them or on their behalf, state that all qualified applicants will receive consideration for employment without regard to race, religion, color, sex, marital status, physical and mental disabilities, or national origin.

ARTICLE 14
TERMINATION OR SUSPENSION OF THE CONTRACT

14.2 TERMINATION BY THE OWNER FOR CAUSE

Change subparagraph 14.2.1 to read:

14.2.1 The Owner may, upon seven days' written notice to the Contractor, terminate (without prejudice to any right or remedy of the Owner) the whole or any portion of the Work for cause, including the following circumstances:

1. the Contractor fails to prosecute the Work or any portion thereof with sufficient diligence to ensure the Substantial Completion of the Work within the Contract Time;
2. the Contractor is in material default of any provision of the Contract;

3. the Contractor is adjudged bankrupt, makes a general assignment for the benefit of its creditors, or if a receiver is appointed on account of its insolvency;
4. the Contractor fails to supply a sufficient number of properly skilled workers or proper materials;
5. the Contractor fails to make prompt payment due to Subcontractors or for materials or labor;
6. the Contractor disregards laws, ordinances, rules, regulations or orders of any public authority having jurisdiction; or
7. the Contractor materially breaches any provision of the Contract Documents.

Add the following new subparagraph:

14.2.5 If the Owner terminates in whole or part the Work pursuant to paragraph 14.2, the Owner may procure, upon such terms and in such manner as it deems appropriate, supplies or services similar to those terminated, and the Contractor shall be liable to the Owner for any excess costs for such similar supplies or services. The Contractor shall continue to perform of this Contract to the extent not terminated hereunder.

ARTICLE 15
ADMINISTRATION OF THE CONTRACT

15.1 CLAIMS AND DISPUTES

Add the following new subparagraphs 15.1.7 and 15.1.8:

15.1.7 All Claims filed against Owner shall be subject to audit at any time following the filing of the Claim. Failure of Contractor, or Subcontractor of any tier, to maintain and retain sufficient records to allow Owner to verify all or a portion of the Claim or to permit Owner access to the books and records of Contractor, or Subcontractors of any tier, shall constitute a waiver of the Claim and shall bar recovery. The audit may be performed by employees of Owner or a representative of Owner. Contractor, and its Subcontractors, shall provide adequate facilities acceptable to Owner, for the audit during normal business hours. Contractor, and all Subcontractors, shall make a good faith effort to cooperate with Owner's auditors.

15.1.8 The Contract Documents and the rights of the parties herein shall be governed by the laws of the State of Washington. Venue for all dispute resolution proceedings (including, but not limited to, mediation, arbitration, and litigation) shall be in the county in which the Owner's principal place of business is located, unless otherwise specified.

END OF SECTION

SECTION 011000 - SUMMARY

PART 1 GENERAL

1.1 RELATED DOCUMENTS

A. Drawings and general provisions of the Contract, including General and Supplementary Conditions and other Division 01 Specification Sections, apply to this Section.

1.2 SUMMARY

A. Section Includes:
1. Project information.
2. Work covered by Contract Documents.
3. Work by Owner.
4. Owner-furnished products.
5. Contractor-furnished, Owner-installed products.
6. Access to site.
7. Work restrictions.
8. Specification and Drawing conventions.
9. Miscellaneous provisions.

1.3 PROJECT INFORMATION

A. Project Identification: Minor additions to existing functional Fire Stations.

Fire Station 53
906 Kamus Drive, F.I.
Gig Harbor, WA 98332

Fire Station 57
10521 Crescent Valley Road NW
Gig Harbor, Washington 98332.

B. Owner: Pierce County Fire District #5, 10222 Bujacich Ave NW, Gig Harbor, WA 98332.

1.4 WORK COVERED BY CONTRACT DOCUMENTS

A. The Work of Project is defined by the Contract Documents and consists of the following:
1. Project Description: Minor additions to existing functional Fire Station. No change in use or occupancy will result from creation of new operational support spaces adjacent to the existing Apparatus Bay with a new Sleep Room and addition/reconfiguration of the existing Fitness Room.

1.5 WORK BY OWNER

A. General: Cooperate fully with Owner so work may be carried out smoothly, without interfering with or delaying work under this Contract or work by Owner. Coordinate the Work of this Contract with work performed by Owner.

B. Concurrent Work: Owner will perform the following construction operations at Project site. Those operations will be conducted simultaneously with Work under this Contract.
1. Various FF&E Items as mutually agreed upon between Owner and Contractor.

C. Subsequent Work: Owner will perform the following additional work at site after Substantial Completion. Completion of that work will depend on successful completion of preparatory Work under this Contract.
1. Various FF&E Items as mutually agreed upon between Owner and Contractor. access control system, alerting system, radio system, data system.

1.6 OWNER-FURNISHED PRODUCTS

A. Owner will furnish and install products indicated.

B. Owner-Furnished Products:
1. Televisions.
2. Fitness Equipment.

1.7 ACCESS TO SITE

A. General: Each Contractor shall have full use of Project site for construction operations during construction period. Contractor's use of Project site is limited only by Owner's right to perform work or to retain other contractors on portions of Project.

1.8 WORK RESTRICTIONS

A. Work Restrictions, General: Comply with restrictions on construction operations.
   1. Comply with limitations on use of public streets and with other requirements of authorities having jurisdiction.

B. Restricted Substances: Use of controlled substances on Project site is not permitted.

1.9 SPECIFICATION AND DRAWING CONVENTIONS

A. Specification Content: The Specifications use certain conventions for the style of language and the intended meaning of certain terms, words, and phrases when used in particular situations. These conventions are as follows:
   1. Imperative mood and streamlined language are generally used in the Specifications. The words "shall," "shall be," or "shall comply with," depending on the context, are implied where a colon (:) is used within a sentence or phrase.
   2. Specification requirements are to be performed by Contractor unless specifically stated otherwise.

B. Division 01 General Requirements: Requirements of Sections in Division 01 apply to the Work of all Sections in the Specifications.

C. Drawing Coordination: Requirements for materials and products identified on Drawings are described in detail in the Specifications. One or more of the following are used on Drawings to identify materials and products:
   1. Terminology: Materials and products are identified by the typical generic terms used in the individual Specifications Sections.
   2. Abbreviations: Materials and products are identified by abbreviations scheduled on Drawings.

PART 2 PRODUCTS (NOT USED)

PART 3 EXECUTION (NOT USED)

END OF SECTION

SECTION 012500 - SUBSTITUTION PROCEDURES

PART 1 GENERAL

1.1 RELATED DOCUMENTS

A. Drawings and general provisions of the Contract, including General and Supplementary Conditions and other Division 01 Specification Sections, apply to this Section.

1.2 SUMMARY

A. Section includes administrative and procedural requirements for substitutions.

B. Related Requirements:

1. Section 016000 - Product Requirements for requirements for submitting comparable product submittals for products by listed manufacturers.

1.3 DEFINITIONS

A. Substitutions: Changes in products, materials, equipment, and methods of construction from those required by the Contract Documents and proposed by Contractor.

1. Substitutions for Cause: Changes proposed by Contractor that are required due to changed Project conditions, such as unavailability of product, regulatory changes, or unavailability of required warranty terms.
2. Substitutions for Convenience: Changes proposed by Contractor or Owner that are not required in order to meet other Project requirements but may offer advantage to Contractor or Owner.

1.4 ACTION SUBMITTALS

A. Substitution Requests: Submit three copies of each request for consideration. Identify product or fabrication or installation method to be replaced. Include Specification Section number and title and Drawing numbers and titles.

1. Substitution Request Form: Use CSI Form 13.1A.
2. Documentation: Show compliance with requirements for substitutions and the following, as applicable:
   a. Statement indicating why specified product or fabrication or installation cannot be provided, if applicable.
   b. Coordination information, including a list of changes or revisions needed to other parts of the Work and to construction performed by Owner and separate contractors, that will be necessary to accommodate proposed substitution.
   c. Detailed comparison of significant qualities of proposed substitution with those of the Work specified. Include annotated copy of applicable Specification Section. Significant qualities may include attributes such as performance, weight, size, durability, visual effect, sustainable design characteristics, warranties, and specific features and requirements indicated. Indicate deviations, if any, from the Work specified.
   d. Product Data, including drawings and descriptions of products and fabrication and installation procedures.
   e. Samples, where applicable or requested.
   f. Certificates and qualification data, where applicable or requested.
   g. List of similar installations for completed projects with project names and addresses and names and addresses of architects and owners.
   h. Material test reports from a qualified testing agency indicating and interpreting test results for compliance with requirements indicated.
   i. Research reports evidencing compliance with building code in effect for Project, from ICC-ES.
   j. Detailed comparison of Contractor's construction schedule using proposed substitution with products specified for the Work, including effect on the overall

Contract Time. If specified product or method of construction cannot be provided within the Contract Time, include letter from manufacturer, on manufacturer's letterhead, stating date of receipt of purchase order, lack of availability, or delays in delivery.

k. Cost information, including a proposal of change, if any, in the Contract Sum.

l. Contractor's certification that proposed substitution complies with requirements in the Contract Documents except as indicated in substitution request, is compatible with related materials, and is appropriate for applications indicated.

m. Contractor's waiver of rights to additional payment or time that may subsequently become necessary because of failure of proposed substitution to produce indicated results.

3. Architect's Action: If necessary, Architect will request additional information or documentation for evaluation within 5 working days of receipt of a request for substitution. Architect will notify Contractor of acceptance or rejection of proposed substitution within 10 working days of receipt of request, or five working days of receipt of additional information or documentation, whichever is later.

a. Forms of Acceptance: Change Order, Construction Change Directive, or Architect's Supplemental Instructions for minor changes in the Work.

b. Use product specified if Architect does not issue a decision on use of a proposed substitution within time allocated.

1.5 QUALITY ASSURANCE

A. Compatibility of Substitutions: Investigate and document compatibility of proposed substitution with related products and materials. Engage a qualified testing agency to perform compatibility tests recommended by manufacturers.

1.6 PROCEDURES

A. Coordination: Revise or adjust affected work as necessary to integrate work of the approved substitutions.

PART 2 PRODUCTS

2.1 SUBSTITUTIONS

A. Substitutions for Cause: Submit requests for substitution immediately on discovery of need for change, but not later than 10 working days prior to time required for preparation and review of related submittals.

1. Conditions: Architect will consider Contractor's request for substitution when the following conditions are satisfied. If the following conditions are not satisfied, Architect will return requests without action, except to record noncompliance with these requirements:

a. Requested substitution is consistent with the Contract Documents and will produce indicated results.

b. Requested substitution provides sustainable design characteristics that specified product provided.

c. Substitution request is fully documented and properly submitted.

d. Requested substitution will not adversely affect Contractor's construction schedule.

e. Requested substitution has received necessary approvals of authorities having jurisdiction.

f. Requested substitution is compatible with other portions of the Work.

g. Requested substitution has been coordinated with other portions of the Work.

h. Requested substitution provides specified warranty.

i. If requested substitution involves more than one Contractor, requested substitution has been coordinated with other portions of the Work, is uniform and consistent, is compatible with other products, and is acceptable to all contractors involved.

B. Substitutions for Convenience: Not allowed unless otherwise indicated.

C. Substitutions for Convenience: Architect will consider requests for substitution if received within 10 working days after the Notice to Proceed. Requests received after that time may be considered or rejected at discretion of Architect.
   1. Conditions: Architect will consider Contractor's request for substitution when the following conditions are satisfied. If the following conditions are not satisfied, Architect will return requests without action, except to record noncompliance with these requirements:
      a. Requested substitution offers Owner a substantial advantage in cost, time, energy conservation, or other considerations, after deducting additional responsibilities Owner must assume. Owner's additional responsibilities may include compensation to Architect for redesign and evaluation services, increased cost of other construction by Owner, and similar considerations.
      b. Requested substitution does not require extensive revisions to the Contract Documents.
      c. Requested substitution is consistent with the Contract Documents and will produce indicated results.
      d. Requested substitution provides sustainable design characteristics that specified product provided.
      e. Substitution request is fully documented and properly submitted.
      f. Requested substitution will not adversely affect Contractor's construction schedule.
      g. Requested substitution has received necessary approvals of authorities having jurisdiction.
      h. Requested substitution is compatible with other portions of the Work.
      i. Requested substitution has been coordinated with other portions of the Work.
      j. Requested substitution provides specified warranty.
      k. If requested substitution involves more than one Contractor, requested substitution has been coordinated with other portions of the Work, is uniform and consistent, is compatible with other products, and is acceptable to all contractors involved.

PART 3 EXECUTION (NOT USED)

END OF SECTION

SECTION 012600 - CONTRACT MODIFICATION PROCEDURES

PART 1 GENERAL

1.1 RELATED DOCUMENTS

A. Drawings and general provisions of the Contract, including General and Supplementary Conditions and other Division 01 Specification Sections, apply to this Section.

1.2 SUMMARY

A. Section includes administrative and procedural requirements for handling and processing Contract modifications.

B. Related Requirements:

1. Section 012500 - SUBSTITUTION PROCEDURES for administrative procedures for handling requests for substitutions made after the Contract award.

1.3 MINOR CHANGES IN THE WORK

A. Architect will issue supplemental instructions authorizing minor changes in the Work, not involving adjustment to the Contract Sum or the Contract Time, on AIA Document G710, "Architect's Supplemental Instructions."

1.4 PROPOSAL REQUESTS

A. Owner-Initiated Proposal Requests: Architect will issue a detailed description of proposed changes in the Work that may require adjustment to the Contract Sum or the Contract Time. If necessary, the description will include supplemental or revised Drawings and Specifications.

1. Work Change Proposal Requests issued by Architect are not instructions either to stop work in progress or to execute the proposed change.
2. Within time specified in Proposal Request or 10 working days, when not otherwise specified, after receipt of Proposal Request, submit a quotation estimating cost adjustments to the Contract Sum and the Contract Time necessary to execute the change.
   a. Include a list of quantities of products required or eliminated and unit costs, with total amount of purchases and credits to be made. If requested, furnish survey data to substantiate quantities.
   b. Indicate applicable taxes, delivery charges, equipment rental, and amounts of trade discounts.
   c. Include costs of labor and supervision directly attributable to the change.
   d. Include an updated Contractor's construction schedule that indicates the effect of the change, including, but not limited to, changes in activity duration, start and finish times, and activity relationship. Use available total float before requesting an extension of the Contract Time.
   e. Quotation Form: Use CSI Form 13.6D, "Proposal Worksheet Summary," and Form 13.6C, "Proposal Worksheet Detail." or forms acceptable to Architect.

B. Contractor-Initiated Proposals: If latent or changed conditions require modifications to the Contract, Contractor may initiate a claim by submitting a request for a change to Architect.

1. Include a statement outlining reasons for the change and the effect of the change on the Work. Provide a complete description of the proposed change. Indicate the effect of the proposed change on the Contract Sum and the Contract Time.
2. Include a list of quantities of products required or eliminated and unit costs, with total amount of purchases and credits to be made. If requested, furnish survey data to substantiate quantities.
3. Indicate applicable taxes, delivery charges, equipment rental, and amounts of trade discounts.
4. Include costs of labor and supervision directly attributable to the change.

5. Include an updated Contractor's construction schedule that indicates the effect of the change, including, but not limited to, changes in activity duration, start and finish times, and activity relationship. Use available total float before requesting an extension of the Contract Time.
6. Comply with requirements in Section 012500 - SUBSTITUTION PROCEDURES if the proposed change requires substitution of one product or system for product or system specified.
7. Proposal Request Form: Use CSI Form 13.6A, "Change Order Request (Proposal)," with attachments CSI Form 13.6D, "Proposal Worksheet Summary," and Form 13.6C, "Proposal Worksheet Detail." or form acceptable to Architect.

1.5 CHANGE ORDER PROCEDURES

A. On Owner's approval of a Work Changes Proposal Request, Architect will issue a Change Order for signatures of Owner and Contractor on AIA Document G701.

1.6 CONSTRUCTION CHANGE DIRECTIVE

A. Construction Change Directive: Architect may issue a Construction Change Directive on AIA Document G714. Construction Change Directive instructs Contractor to proceed with a change in the Work, for subsequent inclusion in a Change Order.
   1. Construction Change Directive contains a complete description of change in the Work. It also designates method to be followed to determine change in the Contract Sum or the Contract Time.
B. Documentation: Maintain detailed records on a time and material basis of work required by the Construction Change Directive.
   1. After completion of change, submit an itemized account and supporting data necessary to substantiate cost and time adjustments to the Contract.

PART 2 PRODUCTS (NOT USED)

PART 3 EXECUTION (NOT USED)

END OF SECTION

SECTION 012900 - PAYMENT PROCEDURES

PART 1 GENERAL

1.1 RELATED DOCUMENTS

A. Drawings and general provisions of the Contract, including General and Supplementary Conditions and other Division 01 Specification Sections, apply to this Section.

1.2 SUMMARY

A. Section includes administrative and procedural requirements necessary to prepare and process Applications for Payment.

B. Related Requirements:

1. Section 012600 - CONTRACT MODIFICATION PROCEDURES for administrative procedures for handling changes to the Contract.
2. Section 013200 - Construction Progress Documentation for administrative requirements governing the preparation and submittal of the Contractor's construction schedule.

1.3 DEFINITIONS

A. Schedule of Values: A statement furnished by Contractor allocating portions of the Contract Sum to various portions of the Work and used as the basis for reviewing Contractor's Applications for Payment.

1.4 SCHEDULE OF VALUES

A. Coordination: Coordinate preparation of the schedule of values with preparation of Contractor's construction schedule. Cost-loaded Critical Path Method Schedule may serve to satisfy requirements for the schedule of values.

1. Coordinate line items in the schedule of values with other required administrative forms and schedules, including the following:
   a. Application for Payment forms with continuation sheets.
   b. Submittal schedule.
   c. Items required to be indicated as separate activities in Contractor's construction schedule.
2. Submit the schedule of values to Architect at earliest possible date, but no later than seven days before the date scheduled for submittal of initial Applications for Payment.
3. Subschedules for Phased Work: Where the Work is separated into phases requiring separately phased payments, provide subschedules showing values coordinated with each phase of payment.
4. Subschedules for Separate Elements of Work: Where the Contractor's construction schedule defines separate elements of the Work, provide subschedules showing values coordinated with each element.
5. Subschedules for Separate Design Contracts: Where the Owner has retained design professionals under separate contracts who will each provide certification of payment requests, provide subschedules showing values coordinated with the scope of each design services contract as described in Section 011000 - Summary.

B. Format and Content: Use Project Manual table of contents as a guide to establish line items for the schedule of values. Provide at least one line item for each Specification Section.

1. Identification: Include the following Project identification on the schedule of values:
   a. Project name and location.
   b. Name of Architect
   c. Architect's project number.
   d. Contractor's name and address.
   e. Date of submittal.
2. Arrange schedule of values consistent with format of AIA Document G703.

3. Arrange the schedule of values in tabular form with separate columns to indicate the following for each item listed:
    a. Related Specification Section or Division.
    b. Description of the Work.
    c. Name of subcontractor.
    d. Name of manufacturer or fabricator.
    e. Name of supplier.
    f. Change Orders (numbers) that affect value.
    g. Dollar value of the following, as a percentage of the Contract Sum to nearest one-hundredth percent, adjusted to total 100 percent.
        1) Labor.
        2) Materials.
        3) Equipment.
4. Provide a breakdown of the Contract Sum in enough detail to facilitate continued evaluation of Applications for Payment and progress reports. Coordinate with Project Manual table of contents. Provide multiple line items for principal subcontract amounts in excess of five percent of the Contract Sum.
    a. Include separate line items under Contractor and principal subcontracts for Project closeout requirements in an amount totaling five percent of the Contract Sum and subcontract amount.
5. Round amounts to nearest whole dollar; total shall equal the Contract Sum.
6. Provide a separate line item in the schedule of values for each part of the Work where Applications for Payment may include materials or equipment purchased or fabricated and stored, but not yet installed.
    a. Differentiate between items stored on-site and items stored off-site. If required, include evidence of insurance.
7. Provide separate line items in the schedule of values for initial cost of materials, for each subsequent stage of completion, and for total installed value of that part of the Work.
8. Allowances: Provide a separate line item in the schedule of values for each allowance. Show line-item value of unit-cost allowances, as a product of the unit cost, multiplied by measured quantity. Use information indicated in the Contract Documents to determine quantities.
9. Purchase Contracts: Provide a separate line item in the schedule of values for each purchase contract. Show line-item value of purchase contract. Indicate Owner payments or deposits, if any, and balance to be paid by Contractor.
10. Each item in the schedule of values and Applications for Payment shall be complete. Include total cost and proportionate share of general overhead and profit for each item.
    a. Temporary facilities and other major cost items that are not direct cost of actual work-in-place may be shown either as separate line items in the schedule of values or distributed as general overhead expense, at Contractor's option.
11. Schedule Updating: Update and resubmit the schedule of values before the next Applications for Payment when Change Orders or Construction Change Directives result in a change in the Contract Sum.

1.5 APPLICATIONS FOR PAYMENT

A. Each Application for Payment following the initial Application for Payment shall be consistent with previous applications and payments as certified by Architect and paid for by Owner.
    1. Initial Application for Payment, Application for Payment at time of Substantial Completion, and final Application for Payment involve additional requirements.
B. Payment Application Times: The date for each progress payment is indicated in the Agreement between Owner and Contractor. The period of construction work covered by each Application

for Payment is the period indicated in the Agreement.

C. Payment Application Times: Submit Application for Payment to Architect by the 5th of each month. Owner will make payment to the Contractor in 30 calendar days. The period covered by each Application for Payment is one month, ending on the last day of the month.
   1. Submit draft copy of Application for Payment seven days prior to due date for review by Architect.
D. Application for Payment Forms: Use AIA Document G702 and AIA Document G703 as form for Applications for Payment.
E. Application for Payment Forms: Use forms provided by Owner for Applications for Payment. Sample copies are included in Project Manual.
F. Application for Payment Forms: Use forms acceptable to Architect and Owner for Applications for Payment. Submit forms for approval with initial submittal of schedule of values.
G. Application Preparation: Complete every entry on form. Notarize and execute by a person authorized to sign legal documents on behalf of Contractor. Architect will return incomplete applications without action.
   1. Entries shall match data on the schedule of values and Contractor's construction schedule. Use updated schedules if revisions were made.
   2. Include amounts for work completed following previous Application for Payment, whether or not payment has been received. Include only amounts for work completed at time of Application for Payment.
   3. Include amounts of Change Orders and Construction Change Directives issued before last day of construction period covered by application.
   4. Indicate separate amounts for work being carried out under Owner-requested project acceleration.
H. Stored Materials: Include in Application for Payment amounts applied for materials or equipment purchased or fabricated and stored, but not yet installed. Differentiate between items stored on-site and items stored off-site.
   1. Provide certificate of insurance, evidence of transfer of title to Owner, and consent of surety to payment, for stored materials.
   2. Provide supporting documentation that verifies amount requested, such as paid invoices. Match amount requested with amounts indicated on documentation; do not include overhead and profit on stored materials.
   3. Provide summary documentation for stored materials indicating the following:
      a. Value of materials previously stored and remaining stored as of date of previous Applications for Payment.
      b. Value of previously stored materials put in place after date of previous Application for Payment and on or before date of current Application for Payment.
      c. Value of materials stored since date of previous Application for Payment and remaining stored as of date of current Application for Payment.
I. Transmittal: Submit three signed and notarized original copies of each Application for Payment to Architect by a method ensuring receipt within 24 hours. One copy shall include waivers of lien and similar attachments if required.
   1. Transmit each copy with a transmittal form listing attachments and recording appropriate information about application.
J. Waivers of Mechanic's Lien: With each Application for Payment, submit waivers of mechanic's lien from entities lawfully entitled to file a mechanic's lien arising out of the Contract and related to the Work covered by the payment.
   1. Submit partial waivers on each item for amount requested in previous application, after deduction for retainage, on each item.
   2. When an application shows completion of an item, submit conditional final or full waivers.

3. Owner reserves the right to designate which entities involved in the Work must submit waivers.
4. Waiver Forms: Submit executed waivers of lien on forms acceptable to Owner.

K. Waivers of Mechanic's Lien: With each Application for Payment, submit waivers of mechanic's liens from subcontractors, sub-subcontractors, and suppliers for construction period covered by the previous application.
1. Submit partial waivers on each item for amount requested in previous application, after deduction for retainage, on each item.
2. When an application shows completion of an item, submit conditional final or full waivers.
3. Owner reserves the right to designate which entities involved in the Work must submit waivers.
4. Submit final Application for Payment with or preceded by conditional final waivers from every entity involved with performance of the Work covered by the application who is lawfully entitled to a lien.
5. Waiver Forms: Submit executed waivers of lien on forms, acceptable to Owner.

L. Initial Application for Payment: Administrative actions and submittals that must precede or coincide with submittal of first Application for Payment include the following:
1. List of subcontractors.
2. Schedule of values.
3. Contractor's construction schedule (preliminary if not final).
4. Combined Contractor's construction schedule (preliminary if not final) incorporating Work of multiple contracts, with indication of acceptance of schedule by each Contractor.
5. Products list (preliminary if not final).
6. Schedule of unit prices.
7. Submittal schedule (preliminary if not final).
8. List of Contractor's staff assignments.
9. List of Contractor's principal consultants.
10. Copies of building permits.
11. Copies of authorizations and licenses from authorities having jurisdiction for performance of the Work.
12. Initial progress report.
13. Report of preconstruction conference.
14. Certificates of insurance and insurance policies.
15. Performance and payment bonds.
16. Data needed to acquire Owner's insurance.

M. Application for Payment at Substantial Completion: After Architect issues the Certificate of Substantial Completion, submit an Application for Payment showing 100 percent completion for portion of the Work claimed as substantially complete.
1. Include documentation supporting claim that the Work is substantially complete and a statement showing an accounting of changes to the Contract Sum.
2. This application shall reflect Certificate(s) of Substantial Completion issued previously for Owner occupancy of designated portions of the Work.

N. Final Payment Application: After completing Project closeout requirements, submit final Application for Payment with releases and supporting documentation not previously submitted and accepted, including, but not limited, to the following:
1. Evidence of completion of Project closeout requirements.
2. Insurance certificates for products and completed operations where required and proof that taxes, fees, and similar obligations were paid.
3. Updated final statement, accounting for final changes to the Contract Sum.
4. AIA Document G706, "Contractor's Affidavit of Payment of Debts and Claims."

5. AIA Document G706A, "Contractor's Affidavit of Release of Liens."
6. AIA Document G707, "Consent of Surety to Final Payment."
7. Evidence that claims have been settled.
8. Final meter readings for utilities, a measured record of stored fuel, and similar data as of date of Substantial Completion or when Owner took possession of and assumed responsibility for corresponding elements of the Work.
9. Notice of Completion of Public Works Contracts received from Public Works, L&I Contractor Release, and Employment Security Department.

O. No final payment shall be made until (a) the Contractor provides to the Owner, prior to the acceptance of the Work, a notarized Certification of Compliance in the form attached hereto as Exhibit A; (b) the Contractor provides to the Owner the Contractor's drawings showing as-built changes and field markings; (c) the Contractor provides to the Owner two copies of the Operating and Maintenance Manuals for equipment and/or systems installed by the Contractor, if applicable; (d) the Owner receives the Certificates of Payments Received by the Washington State Department of Revenue, Employment Security and Labor & Industries; and (e) current status of Contractor's Workers' Comp account is verified.

PART 2 PRODUCTS (NOT USED)
PART 3 EXECUTION (NOT USED)
END OF SECTION

SECTION 013100 - PROJECT MANAGEMENT AND COORDINATION

PART 1 GENERAL

1.1 RELATED DOCUMENTS

A. Drawings and general provisions of the Contract, including General and Supplementary Conditions and other Division 01 Specification Sections, apply to this Section.

1.2 SUMMARY

A. Section includes administrative provisions for coordinating construction operations on Project including, but not limited to, the following:
   1. General coordination procedures.
   2. Coordination drawings.
   3. Requests for Information (RFIs).
   4. Project Web site.
   5. Project meetings.

B. Each contractor shall participate in coordination requirements. Certain areas of responsibility are assigned to a specific contractor.

C. Related Requirements:
   1. Section 013200 - Construction Progress Documentation for preparing and submitting Contractor's construction schedule.
   2. Section 017300 - Execution for procedures for coordinating general installation and field-engineering services, including establishment of benchmarks and control points.
   3. Section 017700 - Closeout Procedures for coordinating closeout of the Contract.

1.3 DEFINITIONS

A. RFI: Request from Owner, Architect, or Contractor seeking information required by or clarifications of the Contract Documents.

1.4 INFORMATIONAL SUBMITTALS

A. Subcontract List: Prepare a written summary identifying individuals or firms proposed for each portion of the Work, including those who are to furnish products or equipment fabricated to a special design. Use CSI Form 1.5A. Include the following information in tabular form:
   1. Name, address, and telephone number of entity performing subcontract or supplying products.
   2. Number and title of related Specification Section(s) covered by subcontract.
   3. Drawing number and detail references, as appropriate, covered by subcontract.

B. Key Personnel Names: Within 5 days of starting construction operations, submit a list of key personnel assignments, including superintendent and other personnel in attendance at Project site. Identify individuals and their duties and responsibilities; list addresses and telephone numbers, including home, office, and cellular telephone numbers and e-mail addresses. Provide names, addresses, and telephone numbers of individuals assigned as alternates in the absence of individuals assigned to Project.
   1. Post copies of list in project meeting room, in temporary field office, and by each temporary telephone. Keep list current at all times.

1.5 GENERAL COORDINATION PROCEDURES

A. Coordination: Coordinate construction operations included in different Sections of the Specifications to ensure efficient and orderly installation of each part of the Work. Coordinate construction operations, included in different Sections, that depend on each other for proper installation, connection, and operation.
   1. Schedule construction operations in sequence required to obtain the best results where installation of one part of the Work depends on installation of other components, before or after its own installation.

2. Coordinate installation of different components to ensure maximum performance and accessibility for required maintenance, service, and repair.
3. Make adequate provisions to accommodate items scheduled for later installation.

B. Coordination: Each Contractor shall coordinate its construction operations with those of other contractors and entities to ensure efficient and orderly installation of each part of the Work. Each Contractor shall coordinate its operations with operations, included in different Sections, that depend on each other for proper installation, connection, and operation.
1. Schedule construction operations in sequence required to obtain the best results where installation of one part of the Work depends on installation of other components, before or after its own installation.
2. Coordinate installation of different components with other contractors to ensure maximum performance and accessibility for required maintenance, service, and repair.
3. Make adequate provisions to accommodate items scheduled for later installation.

C. Prepare memoranda for distribution to each party involved, outlining special procedures required for coordination. Include such items as required notices, reports, and list of attendees at meetings.
1. Prepare similar memoranda for Owner and separate contractors if coordination of their Work is required.

D. Administrative Procedures: Coordinate scheduling and timing of required administrative procedures with other construction activities and activities of other contractors to avoid conflicts and to ensure orderly progress of the Work. Such administrative activities include, but are not limited to, the following:
1. Preparation of Contractor's construction schedule.
2. Preparation of the schedule of values.
3. Installation and removal of temporary facilities and controls.
4. Delivery and processing of submittals.
5. Progress meetings.
6. Preinstallation conferences.
7. Project closeout activities.
8. Startup and adjustment of systems.

E. Conservation: Coordinate construction activities to ensure that operations are carried out with consideration given to conservation of energy, water, and materials. Coordinate use of temporary utilities to minimize waste.
1. Salvage materials and equipment involved in performance of, but not actually incorporated into, the Work. See other Sections for disposition of salvaged materials that are designated as Owner's property.

1.6 REQUESTS FOR INFORMATION (RFIS)

A. General: Immediately on discovery of the need for additional information or interpretation of the Contract Documents, Contractor shall prepare and submit an RFI in the form specified.
1. Architect will return RFIs submitted to Architect by other entities controlled by Contractor with no response.
2. Coordinate and submit RFIs in a prompt manner so as to avoid delays in Contractor's work or work of subcontractors.

B. Content of the RFI: Include a detailed, legible description of item needing information or interpretation and the following:
1. Project name.
2. Project number.
3. Name of Contractor.
4. Name of Architect.
5. RFI number, numbered sequentially.

6. RFI subject.
7. Specification Section number and title and related paragraphs, as appropriate.
8. Drawing number and detail references, as appropriate.
9. Field dimensions and conditions, as appropriate.
10. Contractor's suggested resolution. If Contractor's suggested resolution impacts the Contract Time or the Contract Sum, Contractor shall state impact in the RFI.
11. Contractor's signature.
12. Attachments: Include sketches, descriptions, measurements, photos, Product Data, Shop Drawings, coordination drawings, and other information necessary to fully describe items needing interpretation.
    a. Include dimensions, thicknesses, structural grid references, and details of affected materials, assemblies, and attachments on attached sketches.

C. RFI Forms: AIA Document G716 Software-generated form with substantially the same content as indicated above, acceptable to Architect.
   1. Attachments shall be electronic files in Adobe Acrobat PDF format.

D. Architect's Action: Architect will review each RFI, determine action required, and respond. Allow 10 working days for Architect's response for each RFI. RFIs received by Architect after 3:00 p.m. will be considered as received the following working day.
   1. The following Contractor-generated RFIs will be returned without action:
      a. Requests for approval of submittals.
      b. Requests for approval of substitutions.
      c. Requests for approval of Contractor's means and methods.
      d. Requests for coordination information already indicated in the Contract Documents.
      e. Requests for adjustments in the Contract Time or the Contract Sum.
      f. Requests for interpretation of Architect's actions on submittals.
      g. Incomplete RFIs or inaccurately prepared RFIs.
   2. Architect's action may include a request for additional information, in which case Architect's time for response will date from time of receipt of additional information.
   3. Architect's action on RFIs that may result in a change to the Contract Time or the Contract Sum may be eligible for Contractor to submit Change Proposal according to Section 012600 - CONTRACT MODIFICATION PROCEDURES.
      a. If Contractor believes the RFI response warrants change in the Contract Time or the Contract Sum, notify Architect in writing within 5 days of receipt of the RFI response.

E. RFI Log: Prepare, maintain, and submit a tabular log of RFIs organized by the RFI number. Submit log at Owner Architect Contractor (OAC) Meeting or as requested by Owner or Architect. Use CSI Log Form 13.2B. Software log with not less than the following:
   1. Project name.
   2. Name and address of Contractor.
   3. Name and address of Architect.
   4. RFI number including RFIs that were returned without action or withdrawn.
   5. RFI description.
   6. Date the RFI was submitted.
   7. Date Architect's response was received.

F. On receipt of Architect's action, update the RFI log and immediately distribute the RFI response to affected parties. Review response and notify Architect within seven days if Contractor disagrees with response.
   1. Identification of related Minor Change in the Work, Construction Change Directive, and Proposal Request, as appropriate.
   2. Identification of related Field Order, Work Change Directive, and Proposal Request, as appropriate.

1.7 PROJECT MEETINGS

A. General: Schedule and conduct meetings and conferences at Project site unless otherwise indicated. Due to Covid restrictions meetings will be conducted via digital tele video technology such as ZOOM.
   1. Attendees: Inform participants and others involved, and individuals whose presence is required, of date and time of each meeting. Notify Owner and Architect of scheduled meeting dates and times.
   2. Agenda: Prepare the meeting agenda. Distribute the agenda to all invited attendees.
   3. Minutes: Entity responsible for conducting meeting will record significant discussions and agreements achieved. Distribute the meeting minutes to everyone concerned, including Owner and Architect, within three days of the meeting.

B. Preconstruction Conference: Architect will schedule and conduct a preconstruction conference before starting construction, at a time convenient to Owner and Architect, but no later than 15 days after execution of the Agreement.
   1. Conduct the conference to review responsibilities and personnel assignments.
   2. Attendees: Authorized representatives of Owner and Architect, and their consultants; Contractor and its superintendent; major subcontractors; suppliers; and other concerned parties shall attend the conference. Participants at the conference shall be familiar with Project and authorized to conclude matters relating to the Work.
   3. Agenda: Discuss items of significance that could affect progress, including the following:
      a. Tentative construction schedule.
      b. Phasing.
      c. Critical work sequencing of Owner furnished Items and long-lead items.
      d. Owner Furnished Contractor Installed Items
      e. Designation of key personnel and their duties.
      f. Lines of communications.
      g. Procedures for processing field decisions and Change Orders.
      h. Procedures for RFIs.
      i. Procedures for testing and inspecting.
      j. Procedures for processing Applications for Payment.
      k. Distribution of the Contract Documents.
      l. Submittal procedures.
      m. Preparation of record documents.
      n. Use of the premises.
      o. Work restrictions.
      p. Working hours.
      q. Owner's occupancy requirements.
      r. Responsibility for temporary facilities and controls.
      s. Procedures for moisture and mold control.
      t. Procedures for disruptions and shutdowns.
      u. Construction waste management and recycling.
      v. Parking availability.
      w. Office, work, and storage areas.
      x. Equipment deliveries and priorities.
      y. First aid.
      z. Security.
      aa. Progress cleaning.
   4. Minutes: Entity responsible for conducting meeting will record and distribute meeting minutes.

C. Preinstallation Conferences: Conduct a preinstallation conference at Project site before each construction activity that requires coordination with other construction.
   1. Attendees: Installer and representatives of manufacturers and fabricators involved in or affected by the installation and its coordination or integration with other materials and installations that have preceded or will follow, shall attend the meeting. Advise Architect of scheduled meeting dates.
   2. Agenda: Review progress of other construction activities and preparations for the particular activity under consideration, including requirements for the following:
      a. Contract Documents.
      b. Options.
      c. Related RFIs.
      d. Related Change Orders.
      e. Purchases.
      f. Deliveries.
      g. Submittals.
      h. Review of mockups.
      i. Possible conflicts.
      j. Compatibility requirements.
      k. Time schedules.
      l. Weather limitations.
      m. Manufacturer's written instructions.
      n. Warranty requirements.
      o. Compatibility of materials.
      p. Acceptability of substrates.
      q. Temporary facilities and controls.
      r. Space and access limitations.
      s. Regulations of authorities having jurisdiction.
      t. Testing and inspecting requirements.
      u. Installation procedures.
      v. Coordination with other work.
      w. Required performance results.
      x. Protection of adjacent work.
      y. Protection of construction and personnel.
   3. Record significant conference discussions, agreements, and disagreements, including required corrective measures and actions.
   4. Reporting: Distribute minutes of the meeting to each party present and to other parties requiring information.
   5. Do not proceed with installation if the conference cannot be successfully concluded. Initiate whatever actions are necessary to resolve impediments to performance of the Work and reconvene the conference at earliest feasible date.

D. Project Closeout Conference: Schedule and conduct a project closeout conference, at a time convenient to Owner and Architect, but no later than 14 days prior to the scheduled date of Substantial Completion.
   1. Conduct the conference to review requirements and responsibilities related to Project closeout.
   2. Attendees: Authorized representatives of Owner, Architect, and their consultants; Contractor and its superintendent; major subcontractors; suppliers; and other concerned parties shall attend the meeting. Participants at the meeting shall be familiar with Project and authorized to conclude matters relating to the Work.

3. Agenda: Discuss items of significance that could affect or delay Project closeout, including the following:
   a. Preparation of record documents.
   b. Procedures required prior to inspection for Substantial Completion and for final inspection for acceptance.
   c. Submittal of written warranties.
   d. Requirements for completing documentation.
   e. Requirements for preparing operations and maintenance data.
   f. Requirements for delivery of material samples, attic stock, and spare parts.
   g. Requirements for demonstration and training.
   h. Preparation of Contractor's punch list.
   i. Procedures for processing Applications for Payment at Substantial Completion and for final payment.
   j. Submittal procedures.
   k. Coordination of separate contracts.
   l. Owner's partial occupancy requirements.
   m. Installation of Owner's furniture, fixtures, and equipment.
   n. Responsibility for removing temporary facilities and controls.
4. Minutes: Entity conducting meeting will record and distribute meeting minutes.

E. Progress Meetings: Conduct progress meetings at weekly intervals. All meetings to provide digital tele video capabilities if in-person attendance is not required.
1. Coordinate dates of meetings with preparation of payment requests.
2. Attendees: In addition to representatives of Owner and Architect, each contractor, subcontractor, supplier, and other entity concerned with current progress or involved in planning, coordination, or performance of future activities shall be represented at these meetings. All participants at the meeting shall be familiar with Project and authorized to conclude matters relating to the Work.
3. Agenda: Review and correct or approve minutes of previous progress meeting. Review other items of significance that could affect progress. Include topics for discussion as appropriate to status of Project.
   a. Contractor's Construction Schedule: Review progress since the last meeting. Determine whether each activity is on time, ahead of schedule, or behind schedule, in relation to Contractor's construction schedule. Determine how construction behind schedule will be expedited; secure commitments from parties involved to do so. Discuss whether schedule revisions are required to ensure that current and subsequent activities will be completed within the Contract Time.
      1) Review schedule for next period.
   b. Review present and future needs of each entity present, including the following:
      1) Interface requirements.
      2) Sequence of operations schedule.
      3) Status of submittals.
      4) Status of documentation.
      5) Deliveries.
      6) Off-site fabrication.
      7) Access.
      8) Site utilization.
      9) Temporary facilities and controls.
      10) Progress cleaning.
      11) Quality and work standards.
      12) Status of correction of deficient items.

13) Field observations.
14) Status of RFIs.
15) Status of proposal requests.
16) Pending changes.
17) Status of Change Orders.
18) Pending claims and disputes.
19) Documentation of information for payment requests.

4. Minutes: General Contractor will be responsible for conducting the meeting and will record and distribute the meeting minutes to each party present and to parties requiring information.
   a. Schedule Updating: Revise Contractor's construction schedule after each progress meeting where revisions to the schedule have been made or recognized. Issue revised schedule concurrently with the report of each meeting.

F. Coordination Meetings: Conduct Project coordination meetings at weekly intervals. Project coordination meetings are in addition to specific meetings held for other purposes, such as progress meetings and preinstallation conferences.
   1. Attendees: In addition to representatives of Owner, each contractor, subcontractor, supplier, and other entity concerned with current progress or involved in planning, coordination, or performance of future activities shall be represented at these meetings. All participants at the meetings shall be familiar with Project and authorized to conclude matters relating to the Work. Architect shall be invited to the meeting as needed to facilitate coordination questions.
   2. Agenda: Review and correct or approve minutes of the previous coordination meeting. Review other items of significance that could affect progress. Include topics for discussion as appropriate to status of Project.
      a. Combined Contractor's Construction Schedule: Review progress since the last coordination meeting. Determine whether each contract is on time, ahead of schedule, or behind schedule, in relation to combined Contractor's construction schedule. Determine how construction behind schedule will be expedited; secure commitments from parties involved to do so. Discuss whether schedule revisions are required to ensure that current and subsequent activities will be completed within the Contract Time.
      b. Schedule Updating: Revise combined Contractor's construction schedule after each coordination meeting where revisions to the schedule have been made or recognized. Issue revised schedule concurrently with report of each meeting.
      c. Review present and future needs of each contractor present, including the following:
         1) Interface requirements.
         2) Sequence of operations.
         3) Resolution of BIM component conflicts.
         4) Status of submittals.
         5) Deliveries.
         6) Off-site fabrication.
         7) Access.
         8) Site utilization.
         9) Temporary facilities and controls.
         10) Work hours.
         11) Hazards and risks.
         12) Progress cleaning.
         13) Quality and work standards.
         14) Change Orders.

3. Reporting: Record meeting results and distribute copies to everyone in attendance and to others affected by decisions or actions resulting from each meeting.

PART 2 PRODUCTS (NOT USED)
PART 3 EXECUTION (NOT USED)
END OF SECTION

SECTION 013200 - CONSTRUCTION PROGRESS DOCUMENTATION

PART 1 GENERAL

1.1 RELATED DOCUMENTS

A. Drawings and general provisions of the Contract, including General and Supplementary Conditions and other Division 01 Specification Sections, apply to this Section.

1.2 SUMMARY

A. Section includes administrative and procedural requirements for documenting the progress of construction during performance of the Work, including the following:
   1. Startup construction schedule.
   2. Contractor's construction schedule.
   3. Construction schedule updating reports.
   4. Daily construction reports.
   5. Material location reports.
   6. Site condition reports.
   7. Special reports.

B. Related Requirements:
   1. Section 013300 - Submittal Procedures for submitting schedules and reports.
   2. Section 014000 - Quality Requirements for submitting a schedule of tests and inspections.

1.3 DEFINITIONS

A. Activity: A discrete part of a project that can be identified for planning, scheduling, monitoring, and controlling the construction project. Activities included in a construction schedule consume time and resources.
   1. Critical Activity: An activity on the critical path that must start and finish on the planned early start and finish times.
   2. Predecessor Activity: An activity that precedes another activity in the network.
   3. Successor Activity: An activity that follows another activity in the network.

B. Cost Loading: The allocation of the schedule of values for the completion of an activity as scheduled. The sum of costs for all activities must equal the total Contract Sum unless otherwise approved by Architect.

C. CPM: Critical path method, which is a method of planning and scheduling a construction project where activities are arranged based on activity relationships. Network calculations determine when activities can be performed and the critical path of Project.

D. Critical Path: The longest connected chain of interdependent activities through the network schedule that establishes the minimum overall Project duration and contains no float.

E. Event: The starting or ending point of an activity.

F. Float: The measure of leeway in starting and completing an activity.
   1. Float time belongs to Owner.
   2. Free float is the amount of time an activity can be delayed without adversely affecting the early start of the successor activity.
   3. Total float is the measure of leeway in starting or completing an activity without adversely affecting the planned Project completion date.

G. Resource Loading: The allocation of manpower and equipment necessary for the completion of an activity as scheduled.

1.4 INFORMATIONAL SUBMITTALS

A. Format for Submittals: Submit required submittals in the following format:
   1. Working electronic copy of schedule file, where indicated.
   2. PDF electronic file.
   3. Two paper copies.

B. Startup construction schedule.

1. Approval of cost-loaded, startup construction schedule will not constitute approval of schedule of values for cost-loaded activities.

C. Contractor's Construction Schedule: Initial schedule, of size required to display entire schedule for entire construction period.
D. Construction Schedule Updating Reports: Submit with Applications for Payment.
E. Daily Construction Reports: Submit at weekly intervals.
F. Material Location Reports: Submit at weekly intervals.
G. Site Condition Reports: Submit at time of discovery of differing conditions.

1.5 COORDINATION

A. Coordinate Contractor's construction schedule with the schedule of values, list of subcontracts, submittal schedule, progress reports, payment requests, and other required schedules and reports.
   1. Secure time commitments for performing critical elements of the Work from entities involved.
   2. Coordinate each construction activity in the network with other activities and schedule them in proper sequence.

PART 2 PRODUCTS

2.1 CONTRACTOR'S CONSTRUCTION SCHEDULE, GENERAL

A. Time Frame: Extend schedule from date established for the Notice to Proceed to date of Substantial Completion.
   1. Contract completion date shall not be changed by submission of a schedule that shows an early completion date, unless specifically authorized by Change Order.
B. Activities: Treat each story or separate area as a separate numbered activity for each main element of the Work. Comply with the following:
   1. Procurement Activities: Include procurement process activities for the following long lead items and major items, requiring a cycle of more than 60 days, as separate activities in schedule. Procurement cycle activities include, but are not limited to, submittals, approvals, purchasing, fabrication, and delivery.
      a. Insert list of major items or pieces of equipment.
   2. Submittal Review Time: Include review and resubmittal times indicated in Section 013300 - Submittal Procedures in schedule. Coordinate submittal review times in Contractor's construction schedule with submittal schedule.
   3. Startup and Testing Time: Include no fewer than 15 days for startup and testing.
   4. Substantial Completion: Indicate completion in advance of date established for Substantial Completion, and allow time for Architect's administrative procedures necessary for certification of Substantial Completion.
   5. Punch List and Final Completion: Include not more than 30 days for completion of punch list items and final completion.
C. Work Restrictions: Show the effect of the following items on the schedule:
   1. Coordination with existing construction.
   2. Limitations of continued occupancies.
   3. Uninterruptible services.
   4. Partial occupancy before Substantial Completion.
   5. Use of premises restrictions.
   6. Provisions for future construction.
   7. Seasonal variations.
   8. Environmental control.
D. Recovery Schedule: When periodic update indicates the Work is 14 or more calendar days behind the current approved schedule, submit a separate recovery schedule indicating means by which Contractor intends to regain compliance with the schedule. Indicate changes to

working hours, working days, crew sizes, and equipment required to achieve compliance, and date by which recovery will be accomplished.

E. Computer Scheduling Software: Prepare schedules using current version of a program that has been developed specifically to manage construction schedules.

2.2 CONSTRUCTION SCHEDULE

A. Bar-Chart Schedule: Submit startup, horizontal, bar-chart-type construction schedule within seven days of date established for commencement of the Work the Notice to Proceed the Notice of Award.

B. Preparation: Indicate each significant construction activity separately. Identify first workday of each week with a continuous vertical line. Outline significant construction activities for first 30 days of construction. Include skeleton diagram for the remainder of the Work and a cash requirement prediction based on indicated activities.

2.3 REPORTS

A. Daily Construction Reports: Prepare a daily construction report recording the following information concerning events at Project site:

1. List of subcontractors at Project site.
2. List of separate contractors at Project site.
3. Approximate count of personnel at Project site.
4. Equipment at Project site.
5. Material deliveries.
6. High and low temperatures and general weather conditions, including presence of rain or snow.
7. Accidents.
8. Meetings and significant decisions.
9. Unusual events (see special reports).
10. Stoppages, delays, shortages, and losses.
11. Meter readings and similar recordings.
12. Emergency procedures.
13. Orders and requests of authorities having jurisdiction.
14. Change Orders received and implemented.
15. Construction Change Directives received and implemented.
16. Services connected and disconnected.
17. Equipment or system tests and startups.
18. Partial completions and occupancies.
19. Substantial Completions authorized.

B. Material Location Reports: At weekly intervals, prepare and submit a comprehensive list of materials delivered to and stored at Project site. List shall be cumulative, showing materials previously reported plus items recently delivered. Include with list a statement of progress on and delivery dates for materials or items of equipment fabricated or stored away from Project site. Indicate the following categories for stored materials:

1. Material stored prior to previous report and remaining in storage.
2. Material stored prior to previous report and since removed from storage and installed.
3. Material stored following previous report and remaining in storage.

C. Site Condition Reports: Immediately on discovery of a difference between site conditions and the Contract Documents, prepare and submit a detailed report. Submit with a Request for Information. Include a detailed description of the differing conditions, together with recommendations for changing the Contract Documents.

2.4 SPECIAL REPORTS

A. General: Submit special reports directly to Owner within one day(s) of an occurrence. Distribute copies of report to parties affected by the occurrence.

B. Reporting Unusual Events: When an event of an unusual and significant nature occurs at Project site, whether or not related directly to the Work, prepare and submit a special report. List chain of events, persons participating, response by Contractor's personnel, evaluation of results or effects, and similar pertinent information. Advise Owner in advance when these events are known or predictable.

PART 3 EXECUTION

3.1 CONTRACTOR'S CONSTRUCTION SCHEDULE

A. Scheduling: Contractor shall employ skilled personnel with experience in scheduling and reporting techniques to create the construction schedule.

B. Contractor's Construction Schedule Updating: At weekly intervals, update schedule to reflect actual construction progress and activities. Issue schedule one week before each regularly scheduled progress meeting.

1. Revise schedule immediately after each meeting or other activity where revisions have been recognized or made. Issue updated schedule concurrently with the report of each such meeting.
2. Include a report with updated schedule that indicates every change, including, but not limited to, changes in logic, durations, actual starts and finishes, and activity durations.
3. As the Work progresses, indicate final completion percentage for each activity.

C. Distribution: Distribute copies of approved schedule to Architect and Owner. separate contractors, testing and inspecting agencies, and other parties identified by Contractor with a need-to-know schedule responsibility.

1. Post copies in Project meeting rooms and temporary field offices.
2. When revisions are made, distribute updated schedules to the same parties and post in the same locations. Delete parties from distribution when they have completed their assigned portion of the Work and are no longer involved in performance of construction activities.

END OF SECTION

SECTION 013300 - SUBMITTAL PROCEDURES

PART 1 GENERAL

1.1 RELATED DOCUMENTS

A. Drawings and general provisions of the Contract, including General and Supplementary Conditions and other Division 01 Specification Sections, apply to this Section.

1.2 SUMMARY

A. Section includes requirements for the submittal schedule and administrative and procedural requirements for submitting Shop Drawings, Product Data, Samples, and other submittals.

B. Related Requirements:

1. Section 012900 - Payment Procedures for submitting Applications for Payment and the schedule of values.
2. Section 013200 - Construction Progress Documentation for submitting schedules and reports, including Contractor's construction schedule.
3. Section 017823 - Operation and Maintenance Data for submitting operation and maintenance manuals.
4. Section 017839 - Project Record Documents for submitting record Drawings, record Specifications, and record Product Data.

1.3 DEFINITIONS

A. Action Submittals: Written and graphic information and physical samples that require Architect's responsive action. Action submittals are those submittals indicated in individual Specification Sections as "action submittals."

B. Informational Submittals: Written and graphic information and physical samples that do not require Architect's responsive action. Submittals may be rejected for not complying with requirements. Informational submittals are those submittals indicated in individual Specification Sections as "informational submittals."

C. File Transfer Protocol (FTP): Communications protocol that enables transfer of files to and from another computer over a network and that serves as the basis for standard Internet protocols. An FTP site is a portion of a network located outside of network firewalls within which internal and external users are able to access files.

D. Portable Document Format (PDF): An open standard file format licensed by Adobe Systems used for representing documents in a device-independent and display resolution-independent fixed-layout document format.

1.4 ACTION SUBMITTALS

A. Submittal Schedule: Submit a schedule of submittals, arranged in chronological order by dates required by construction schedule. Include time required for review, ordering, manufacturing, fabrication, and delivery when establishing dates. Include additional time required for making corrections or revisions to submittals noted by Architect and additional time for handling and reviewing submittals required by those corrections.

1. Coordinate submittal schedule with list of subcontracts, the schedule of values, and Contractor's construction schedule.
2. Initial Submittal: Submit concurrently with startup construction schedule. Include submittals required during the first 60 days of construction. List those submittals required to maintain orderly progress of the Work and those required early because of long lead time for manufacture or fabrication.
3. Final Submittal: Submit concurrently with the first complete submittal of Contractor's construction schedule.
   a. Submit revised submittal schedule to reflect changes in current status and timing for submittals.
4. Format: Arrange the following information in a tabular format:

a. Scheduled date for first submittal.
b. Specification Section number and title.
c. Submittal category: Action; informational.
d. Name of subcontractor.
e. Description of the Work covered.
f. Scheduled date for Architect's final release or approval.
g. Scheduled date of fabrication.
h. Scheduled dates for purchasing.
i. Scheduled dates for installation.
j. Activity or event number.

1.5 SUBMITTAL ADMINISTRATIVE REQUIREMENTS

A. Architect's Digital Data Files: Electronic digital data files of the Contract Drawings will be provided by Architect for Contractor's use in preparing submittals.
1. Architect will furnish Contractor one set of digital data drawing files of the Contract Drawings for use in preparing Shop Drawings and Project record drawings.
a. Architect makes no representations as to the accuracy or completeness of digital data drawing files as they relate to the Contract Drawings.
b. Digital Drawing Software Program: The Contract Drawings are available in pdf and AutoCAD.
c. Contractor shall execute a data licensing agreement in the form of Agreement form acceptable to Owner and Architect.
d. The following digital data files will by furnished for each appropriate discipline:
1) Floor plans.
2) Reflected ceiling plans.

B. Coordination: Coordinate preparation and processing of submittals with performance of construction activities.
1. Coordinate each submittal with fabrication, purchasing, testing, delivery, other submittals, and related activities that require sequential activity.
2. Submit all submittal items required for each Specification Section concurrently unless partial submittals for portions of the Work are indicated on approved submittal schedule.
3. Submit action submittals and informational submittals required by the same Specification Section as separate packages under separate transmittals.
4. Coordinate transmittal of different types of submittals for related parts of the Work so processing will not be delayed because of need to review submittals concurrently for coordination.
a. Architect reserves the right to withhold action on a submittal requiring coordination with other submittals until related submittals are received.

C. Processing Time: Allow time for submittal review, including time for resubmittals, as follows. Time for review shall commence on Architect's receipt of submittal. No extension of the Contract Time will be authorized because of failure to transmit submittals enough in advance of the Work to permit processing, including resubmittals.
1. Initial Review: Allow 10 working days for initial review of each submittal. Allow additional time if coordination with subsequent submittals is required. Architect will advise Contractor when a submittal being processed must be delayed for coordination.
2. Intermediate Review: If intermediate submittal is necessary, process it in same manner as initial submittal.
3. Resubmittal Review: Allow 10 working days for review of each resubmittal.
4. Concurrent Consultant Review: Where the Contract Documents indicate that submittals may be transmitted simultaneously to Architect and to Architect's consultants, allow 7 days for review of each submittal. Submittal will be returned to Architect before being

returned to Contractor.

D. Electronic Submittals: Identify and incorporate information in each electronic submittal file as follows:
   1. Assemble complete submittal package into a single indexed file incorporating submittal requirements of a single Specification Section and transmittal form with links enabling navigation to each item.
   2. Name file with submittal number or other unique identifier, including revision identifier.
      a. File name shall use project identifier and Specification Section number followed by a decimal point and then a sequential number (e.g., LNHS-061000.01). Resubmittals shall include an alphabetic suffix after another decimal point (e.g., LNHS-061000.01.A).
   3. Provide means for insertion to permanently record Contractor's review and approval markings and action taken by Architect.
   4. Transmittal Form for Electronic Submittals: Use electronic form acceptable to Owner, containing the following information:
      a. Project name.
      b. Name and address of Architect.
      c. Name of Construction Manager.
      d. Name of Contractor.
      e. Name of firm or entity that prepared submittal.
      f. Names of subcontractor, manufacturer, and supplier.
      g. Category and type of submittal.
      h. Submittal purpose and description.
      i. Specification Section number and title.
      j. Specification paragraph number or drawing designation and generic name for each of multiple items.
      k. Drawing number and detail references, as appropriate.
      l. Location(s) where product is to be installed, as appropriate.
      m. Related physical samples submitted directly.
      n. Indication of full or partial submittal.
      o. Transmittal number, numbered consecutively.
      p. Submittal and transmittal distribution record.
      q. Other necessary identification.
      r. Remarks.
   5. Metadata: Include the following information as keywords in the electronic submittal file metadata:
      a. Project name.
      b. Number and title of appropriate Specification Section.
      c. Manufacturer name.
      d. Product name.

E. Options: Identify options requiring selection by Architect.

F. Deviations and Additional Information: On an attached separate sheet, prepared on Contractor's letterhead, record relevant information, requests for data, revisions other than those requested by Architect on previous submittals, and deviations from requirements in the Contract Documents, including minor variations and limitations. Include same identification information as related submittal.

G. Resubmittals: Make resubmittals in same form and number of copies as initial submittal.
   1. Note date and content of previous submittal.
   2. Note date and content of revision in label or title block and clearly indicate extent of revision.

3. Resubmit submittals until they are marked with approval notation from Architect's action stamp.

H. Distribution: Furnish copies of final submittals to manufacturers, subcontractors, suppliers, fabricators, installers, authorities having jurisdiction, and others as necessary for performance of construction activities. Show distribution on transmittal forms.

I. Use for Construction: Retain complete copies of submittals on Project site. Use only final action submittals that are marked with approval notation from Architect's action stamp.

PART 2 PRODUCTS

2.1 SUBMITTAL PROCEDURES

A. General Submittal Procedure Requirements: Contractor shall review and approve submittals prior to issuance to Architect. Prepare and submit submittals required by individual Specification Sections. Types of submittals are indicated in individual Specification Sections.

1. Post electronic submittals as PDF electronic files directly to Architect's representative specifically established for Project.
   a. Architect will return annotated file. Annotate and retain one copy of file as an electronic Project record document file.
2. Submit electronic submittals via email as PDF electronic files.
   a. Architect will return annotated file. Annotate and retain one copy of file as an electronic Project record document file.
3. Certificates and Certifications Submittals: Provide a statement that includes signature of entity responsible for preparing certification. Certificates and certifications shall be signed by an officer or other individual authorized to sign documents on behalf of that entity.
   a. Provide a digital signature with digital certificate on electronically submitted certificates and certifications where indicated.
   b. Provide a notarized statement on original paper copy certificates and certifications where indicated.

B. Product Data: Collect information into a single submittal for each element of construction and type of product or equipment.

1. If information must be specially prepared for submittal because standard published data are not suitable for use, submit as Shop Drawings, not as Product Data.
2. Mark each copy of each submittal to show which products and options are applicable.
3. Include the following information, as applicable:
   a. Manufacturer's catalog cuts.
   b. Manufacturer's product specifications.
   c. Standard color charts.
   d. Statement of compliance with specified referenced standards.
   e. Testing by recognized testing agency.
   f. Application of testing agency labels and seals.
   g. Notation of coordination requirements.
   h. Availability and delivery time information.
4. For equipment, include the following in addition to the above, as applicable:
   a. Wiring diagrams showing factory-installed wiring.
   b. Printed performance curves.
   c. Operational range diagrams.
   d. Clearances required to other construction, if not indicated on accompanying Shop Drawings.
5. Submit Product Data before or concurrent with Samples.
6. Submit Product Data in the following format:
   a. PDF electronic file.

b. Three paper copies of Product Data unless otherwise indicated. Architect will return two copies.

C. Shop Drawings: Prepare Project-specific information, drawn accurately to scale. Do not base Shop Drawings on reproductions of the Contract Documents or standard printed data, unless submittal based on Architect's digital data drawing files is otherwise permitted.
1. Preparation: Fully illustrate requirements in the Contract Documents. Include the following information, as applicable:
a. Identification of products.
b. Schedules.
c. Compliance with specified standards.
d. Notation of coordination requirements.
e. Notation of dimensions established by field measurement.
f. Relationship and attachment to adjoining construction clearly indicated.
g. Seal and signature of professional engineer if specified.
2. Sheet Size: Except for templates, patterns, and similar full-size drawings, submit Shop Drawings on sheets at least 8-1/2 by 11 inches, but no larger than 24 by 36 inches.
3. Submit Shop Drawings in the following format:
a. PDF electronic file.

D. Samples: Submit Samples for review of kind, color, pattern, and texture for a check of these characteristics with other elements and for a comparison of these characteristics between submittal and actual component as delivered and installed.
1. Transmit Samples that contain multiple, related components such as accessories together in one submittal package.
2. Identification: Attach label on unexposed side of Samples that includes the following:
a. Generic description of Sample.
b. Product name and name of manufacturer.
c. Sample source.
d. Number and title of applicable Specification Section.
e. Specification paragraph number and generic name of each item.
3. For projects where electronic submittals are required, provide corresponding electronic submittal of Sample transmittal, digital image file illustrating Sample characteristics, and identification information for record.
4. Disposition: Maintain sets of approved Samples at Project site, available for quality-control comparisons throughout the course of construction activity. Sample sets may be used to determine final acceptance of construction associated with each set.
a. Samples that may be incorporated into the Work are indicated in individual Specification Sections. Such Samples must be in an undamaged condition at time of use.
b. Samples not incorporated into the Work, or otherwise designated as Owner's property, are the property of Contractor.
5. Samples for Initial Selection: Submit manufacturer's color charts consisting of units or sections of units showing the full range of colors, textures, and patterns available.
a. Number of Samples: Submit one full set(s) of available choices where color, pattern, texture, or similar characteristics are required to be selected from manufacturer's product line. Architect will return submittal with options selected.
6. Samples for Verification: Submit full-size units or Samples of size indicated, prepared from same material to be used for the Work, cured and finished in manner specified, and physically identical with material or product proposed for use, and that show full range of color and texture variations expected. Samples include, but are not limited to, the following: partial sections of manufactured or fabricated components; small cuts or

containers of materials; complete units of repetitively used materials; swatches showing color, texture, and pattern; color range sets; and components used for independent testing and inspection.

a. Number of Samples: Submit three sets of Samples. Architect will retain two Sample sets; remainder will be returned. Mark up and retain one returned Sample set as a project record sample.
    1) Submit a single Sample where assembly details, workmanship, fabrication techniques, connections, operation, and other similar characteristics are to be demonstrated.
    2) If variation in color, pattern, texture, or other characteristic is inherent in material or product represented by a Sample, submit at least three sets of paired units that show approximate limits of variations.

E. Product Schedule: As required in individual Specification Sections, prepare a written summary indicating types of products required for the Work and their intended location. Include the following information in tabular form:
    1. Type of product. Include unique identifier for each product indicated in the Contract Documents or assigned by Contractor if none is indicated.
    2. Manufacturer and product name, and model number if applicable.
    3. Number and name of room or space.
    4. Location within room or space.
    5. Submit product schedule in the following format:
        a. PDF electronic file.

F. Coordination Drawing Submittals: Comply with requirements specified in Section 013100 - Project Management and Coordination.

G. Contractor's Construction Schedule: Comply with requirements specified in Section 013200 - Construction Progress Documentation.

H. Application for Payment and Schedule of Values: Comply with requirements specified in Section 012900 - Payment Procedures.

I. Test and Inspection Reports and Schedule of Tests and Inspections Submittals: Comply with requirements specified in Section 014000 - Quality Requirements.

J. Closeout Submittals and Maintenance Material Submittals: Comply with requirements specified in Section 017700 - Closeout Procedures.

K. Maintenance Data: Comply with requirements specified in Section 017823 - Operation and Maintenance Data.

L. Qualification Data: Prepare written information that demonstrates capabilities and experience of firm or person. Include lists of completed projects with project names and addresses, contact information of architects and owners, and other information specified.

M. Welding Certificates: Prepare written certification that welding procedures and personnel comply with requirements in the Contract Documents. Submit record of Welding Procedure Specification and Procedure Qualification Record on AWS forms. Include names of firms and personnel certified.

N. Installer Certificates: Submit written statements on manufacturer's letterhead certifying that Installer complies with requirements in the Contract Documents and, where required, is authorized by manufacturer for this specific Project.

O. Manufacturer Certificates: Submit written statements on manufacturer's letterhead certifying that manufacturer complies with requirements in the Contract Documents. Include evidence of manufacturing experience where required.

P. Product Certificates: Submit written statements on manufacturer's letterhead certifying that product complies with requirements in the Contract Documents.

Q. Material Certificates: Submit written statements on manufacturer's letterhead certifying that material complies with requirements in the Contract Documents.
R. Material Test Reports: Submit reports written by a qualified testing agency, on testing agency's standard form, indicating and interpreting test results of material for compliance with requirements in the Contract Documents.
S. Product Test Reports: Submit written reports indicating that current product produced by manufacturer complies with requirements in the Contract Documents. Base reports on evaluation of tests performed by manufacturer and witnessed by a qualified testing agency, or on comprehensive tests performed by a qualified testing agency.
T. Research Reports: Submit written evidence, from a model code organization acceptable to authorities having jurisdiction, that product complies with building code in effect for Project. Include the following information:
    1. Name of evaluation organization.
    2. Date of evaluation.
    3. Time period when report is in effect.
    4. Product and manufacturers' names.
    5. Description of product.
    6. Test procedures and results.
    7. Limitations of use.
U. Preconstruction Test Reports: Submit reports written by a qualified testing agency, on testing agency's standard form, indicating and interpreting results of tests performed before installation of product, for compliance with performance requirements in the Contract Documents.
V. Field Test Reports: Submit written reports indicating and interpreting results of field tests performed either during installation of product or after product is installed in its final location, for compliance with requirements in the Contract Documents.
W. Design Data: Prepare and submit written and graphic information, including, but not limited to, performance and design criteria, list of applicable codes and regulations, and calculations. Include list of assumptions and other performance and design criteria and a summary of loads. Include load diagrams if applicable. Provide name and version of software, if any, used for calculations. Include page numbers.

PART 3 EXECUTION

3.1 CONTRACTOR'S REVIEW

A. Action and Informational Submittals: Review each submittal and check for coordination with other Work of the Contract and for compliance with the Contract Documents. Note corrections and field dimensions. Mark with approval stamp before submitting to Architect.
B. Project Closeout and Maintenance Material Submittals: See requirements in Section 017700 - Closeout Procedures.
C. Approval Stamp: Stamp each submittal with a uniform, approval stamp. Include Project name and location, submittal number, Specification Section title and number, name of reviewer, date of Contractor's approval, and statement certifying that submittal has been reviewed, checked, and approved for compliance with the Contract Documents.

3.2 ARCHITECT'S ACTION

A. Action Submittals: Architect will review each submittal, make marks to indicate corrections or revisions required, and return it. Architect will stamp each submittal with an action stamp and will mark stamp appropriately to indicate action.
B. Informational Submittals: Architect will review each submittal and will not return it, or will return it if it does not comply with requirements. Architect will forward each submittal to appropriate party.
C. Partial submittals prepared for a portion of the Work will be reviewed when use of partial submittals has received prior approval from Architect.

D. Incomplete submittals are unacceptable, will be considered nonresponsive, and will be returned for resubmittal without review.
E. Submittals not required by the Contract Documents may be returned by the Architect without action.

END OF SECTION

SECTION 014000 - QUALITY REQUIREMENTS

PART 1 GENERAL

1.1 RELATED DOCUMENTS

A. Drawings and general provisions of the Contract, including General and Supplementary Conditions and other Division 01 Specification Sections, apply to this Section.

1.2 SUMMARY

A. Section includes administrative and procedural requirements for quality assurance and quality control.

B. Testing and inspecting services are required to verify compliance with requirements specified or indicated. These services do not relieve Contractor of responsibility for compliance with the Contract Document requirements.

1. Specific quality-assurance and -control requirements for individual construction activities are specified in the Sections that specify those activities. Requirements in those Sections may also cover production of standard products.
2. Specified tests, inspections, and related actions do not limit Contractor's other quality-assurance and -control procedures that facilitate compliance with the Contract Document requirements.
3. Requirements for Contractor to provide quality-assurance and -control services required by Architect, Owner, or authorities having jurisdiction are not limited by provisions of this Section.
4. Specific test and inspection requirements are not specified in this Section.

1.3 DEFINITIONS

A. Quality-Assurance Services: Activities, actions, and procedures performed before and during execution of the Work to guard against defects and deficiencies and substantiate that proposed construction will comply with requirements.

B. Quality-Control Services: Tests, inspections, procedures, and related actions during and after execution of the Work to evaluate that actual products incorporated into the Work and completed construction comply with requirements. Services do not include contract enforcement activities performed by Architect.

C. Preconstruction Testing: Tests and inspections performed specifically for Project before products and materials are incorporated into the Work, to verify performance or compliance with specified criteria.

D. Product Testing: Tests and inspections that are performed by an NRTL, an NVLAP, or a testing agency qualified to conduct product testing and acceptable to authorities having jurisdiction, to establish product performance and compliance with specified requirements.

E. Source Quality-Control Testing: Tests and inspections that are performed at the source, e.g., plant, mill, factory, or shop.

F. Field Quality-Control Testing: Tests and inspections that are performed on-site for installation of the Work and for completed Work.

G. Testing Agency: An entity engaged to perform specific tests, inspections, or both. Testing laboratory shall mean the same as testing agency.

H. Installer/Applicator/Erector: Contractor or another entity engaged by Contractor as an employee, Subcontractor, or Sub-subcontractor, to perform a particular construction operation, including installation, erection, application, and similar operations.

1. Use of trade-specific terminology in referring to a trade or entity does not require that certain construction activities be performed by accredited or unionized individuals, or that requirements specified apply exclusively to specific trade(s).

I. Experienced: When used with an entity or individual, "experienced" means having successfully completed a minimum of five previous projects similar in nature, size, and extent to this Project;

being familiar with special requirements indicated; and having complied with requirements of authorities having jurisdiction.

1.4 CONFLICTING REQUIREMENTS

A. Referenced Standards: If compliance with two or more standards is specified and the standards establish different or conflicting requirements for minimum quantities or quality levels, comply with the most stringent requirement. Refer conflicting requirements that are different, but apparently equal, to Architect for a decision before proceeding.

B. Minimum Quantity or Quality Levels: The quantity or quality level shown or specified shall be the minimum provided or performed. The actual installation may comply exactly with the minimum quantity or quality specified, or it may exceed the minimum within reasonable limits. To comply with these requirements, indicated numeric values are minimum or maximum, as appropriate, for the context of requirements. Refer uncertainties to Architect for a decision before proceeding.

1.5 ACTION SUBMITTALS

A. Shop Drawings: For integrated exterior mockups, provide plans, sections, and elevations, indicating materials and size of mockup construction.

1. Indicate manufacturer and model number of individual components.
2. Provide axonometric drawings for conditions difficult to illustrate in two dimensions.

1.6 INFORMATIONAL SUBMITTALS

A. Contractor's Quality-Control Plan: For quality-assurance and quality-control activities and responsibilities.

B. Qualification Data : For Contractor's quality-control personnel.

C. Contractor's Statement of Responsibility: When required by authorities having jurisdiction, submit copy of written statement of responsibility sent to authorities having jurisdiction before starting work on the following systems:

1. Seismic-force-resisting system, designated seismic system, or component listed in the designated seismic system quality-assurance plan prepared by Architect.
2. Main wind-force-resisting system or a wind-resisting component listed in the wind-force-resisting system quality-assurance plan prepared by Architect.

D. Testing Agency Qualifications: For testing agencies specified in "Quality Assurance" Article to demonstrate their capabilities and experience. Include proof of qualifications in the form of a recent report on the inspection of the testing agency by a recognized authority.

E. Schedule of Tests and Inspections: Prepare in tabular form and include the following:

1. Specification Section number and title.
2. Entity responsible for performing tests and inspections.
3. Description of test and inspection.
4. Identification of applicable standards.
5. Identification of test and inspection methods.
6. Number of tests and inspections required.
7. Time schedule or time span for tests and inspections.
8. Requirements for obtaining samples.
9. Unique characteristics of each quality-control service.

1.7 CONTRACTOR'S QUALITY-CONTROL PLAN

A. Quality-Control Plan, General: Submit quality-control plan within 10 days of Notice to Proceed, and not less than five days prior to preconstruction conference. Submit in format acceptable to Architect. Identify personnel, procedures, controls, instructions, tests, records, and forms to be used to carry out Contractor's quality-assurance and quality-control responsibilities. Coordinate with Contractor's construction schedule.

B. Quality-Control Personnel Qualifications: Engage qualified full-time personnel trained and experienced in managing and executing quality-assurance and quality-control procedures

similar in nature and extent to those required for Project.
1. Project quality-control manager may also serve as Project superintendent.

C. Submittal Procedure: Describe procedures for ensuring compliance with requirements through review and management of submittal process. Indicate qualifications of personnel responsible for submittal review.

D. Testing and Inspection: In quality-control plan, include a comprehensive schedule of Work requiring testing or inspection, including the following:
1. Contractor-performed tests and inspections including subcontractor-performed tests and inspections. Include required tests and inspections and Contractor-elected tests and inspections.
2. Special inspections required by authorities having jurisdiction and indicated on the "Statement of Special Inspections."
3. Owner-performed tests and inspections indicated in the Contract Documents, including tests and inspections indicated to be performed by the Commissioning Authority.

E. Continuous Inspection of Workmanship: Describe process for continuous inspection during construction to identify and correct deficiencies in workmanship in addition to testing and inspection specified. Indicate types of corrective actions to be required to bring work into compliance with standards of workmanship established by Contract requirements and approved mockups.

F. Monitoring and Documentation: Maintain testing and inspection reports including log of approved and rejected results. Include work Architect has indicated as nonconforming or defective. Indicate corrective actions taken to bring nonconforming work into compliance with requirements. Comply with requirements of authorities having jurisdiction.

1.8 REPORTS AND DOCUMENTS

A. Test and Inspection Reports: Prepare and submit certified written reports specified in other Sections. Include the following:
1. Date of issue.
2. Project title and number.
3. Name, address, and telephone number of testing agency.
4. Dates and locations of samples and tests or inspections.
5. Names of individuals making tests and inspections.
6. Description of the Work and test and inspection method.
7. Identification of product and Specification Section.
8. Complete test or inspection data.
9. Test and inspection results and an interpretation of test results.
10. Record of temperature and weather conditions at time of sample taking and testing and inspecting.
11. Comments or professional opinion on whether tested or inspected Work complies with the Contract Document requirements.
12. Name and signature of laboratory inspector.
13. Recommendations on retesting and reinspecting.

B. Manufacturer's Technical Representative's Field Reports: Prepare written information documenting manufacturer's technical representative's tests and inspections specified in other Sections. Include the following:
1. Name, address, and telephone number of technical representative making report.
2. Statement on condition of substrates and their acceptability for installation of product.
3. Statement that products at Project site comply with requirements.
4. Summary of installation procedures being followed, whether they comply with requirements and, if not, what corrective action was taken.

5. Results of operational and other tests and a statement of whether observed performance complies with requirements.
6. Statement whether conditions, products, and installation will affect warranty.
7. Other required items indicated in individual Specification Sections.

C. Factory-Authorized Service Representative's Reports: Prepare written information documenting manufacturer's factory-authorized service representative's tests and inspections specified in other Sections. Include the following:
1. Name, address, and telephone number of factory-authorized service representative making report.
2. Statement that equipment complies with requirements.
3. Results of operational and other tests and a statement of whether observed performance complies with requirements.
4. Statement whether conditions, products, and installation will affect warranty.
5. Other required items indicated in individual Specification Sections.

D. Permits, Licenses, and Certificates: For Owner's records, submit copies of permits, licenses, certifications, inspection reports, releases, jurisdictional settlements, notices, receipts for fee payments, judgments, correspondence, records, and similar documents, established for compliance with standards and regulations bearing on performance of the Work.

1.9 QUALITY ASSURANCE

A. General: Qualifications paragraphs in this article establish the minimum qualification levels required; individual Specification Sections specify additional requirements.

B. Manufacturer Qualifications: A firm experienced in manufacturing products or systems similar to those indicated for this Project and with a record of successful in-service performance, as well as sufficient production capacity to produce required units.

C. Fabricator Qualifications: A firm experienced in producing products similar to those indicated for this Project and with a record of successful in-service performance, as well as sufficient production capacity to produce required units.

D. Installer Qualifications: A firm or individual experienced in installing, erecting, or assembling work similar in material, design, and extent to that indicated for this Project, whose work has resulted in construction with a record of successful in-service performance.

E. Professional Engineer Qualifications: A professional engineer who is legally qualified to practice in jurisdiction where Project is located and who is experienced in providing engineering services of the kind indicated. Engineering services are defined as those performed for installations of the system, assembly, or product that are similar in material, design, and extent to those indicated for this Project.

F. Specialists: Certain Specification Sections require that specific construction activities shall be performed by entities who are recognized experts in those operations. Specialists shall satisfy qualification requirements indicated and shall be engaged for the activities indicated.
1. Requirements of authorities having jurisdiction shall supersede requirements for specialists.

G. Testing Agency Qualifications: An NRTL, an NVLAP, or an independent agency with the experience and capability to conduct testing and inspecting indicated, as documented according to ASTM E 329; and with additional qualifications specified in individual Sections; and, where required by authorities having jurisdiction, that is acceptable to authorities.
1. NRTL: A nationally recognized testing laboratory according to 29 CFR 1910.7.
2. NVLAP: A testing agency accredited according to NIST's National Voluntary Laboratory Accreditation Program.

H. Manufacturer's Technical Representative Qualifications: An authorized representative of manufacturer who is trained and approved by manufacturer to observe and inspect installation of manufacturer's products that are similar in material, design, and extent to those indicated for

this Project.

I. Factory-Authorized Service Representative Qualifications: An authorized representative of manufacturer who is trained and approved by manufacturer to inspect installation of manufacturer's products that are similar in material, design, and extent to those indicated for this Project.

J. Preconstruction Testing: Where testing agency is indicated to perform preconstruction testing for compliance with specified requirements for performance and test methods, comply with the following:
   1. Contractor responsibilities include the following:
      a. Provide test specimens representative of proposed products and construction.
      b. Submit specimens in a timely manner with sufficient time for testing and analyzing results to prevent delaying the Work.
      c. Provide sizes and configurations of test assemblies, mockups, and laboratory mockups to adequately demonstrate capability of products to comply with performance requirements.
      d. Build site-assembled test assemblies and mockups using installers who will perform same tasks for Project.
      e. Build laboratory mockups at testing facility using personnel, products, and methods of construction indicated for the completed Work.
      f. When testing is complete, remove test specimens, assemblies, and mockups; do not reuse products on Project.
   2. Testing Agency Responsibilities: Submit a certified written report of each test, inspection, and similar quality-assurance service to Architect, with copy to Contractor. Interpret tests and inspections and state in each report whether tested and inspected work complies with or deviates from the Contract Documents.

K. Integrated Exterior Mockups: Construct integrated exterior mockup according to approved Shop Drawings. Coordinate installation of exterior envelope materials and products for which mockups are required in individual Specification Sections, along with supporting materials.

1.10 QUALITY CONTROL

A. Owner Responsibilities: Where quality-control services are indicated as Owner's responsibility, Owner will engage a qualified testing agency to perform these services.
   1. Owner will furnish Contractor with names, addresses, and telephone numbers of testing agencies engaged and a description of types of testing and inspecting they are engaged to perform.
   2. Payment for these services will be made from testing and inspecting allowances, as authorized by Change Orders.
   3. Costs for retesting and reinspecting construction that replaces or is necessitated by work that failed to comply with the Contract Documents will be charged to Contractor.

B. Contractor Responsibilities: Tests and inspections not explicitly assigned to Owner are Contractor's responsibility. Perform additional quality-control activities required to verify that the Work complies with requirements, whether specified or not.
   1. Unless otherwise indicated, provide quality-control services specified and those required by authorities having jurisdiction. Perform quality-control services required of Contractor by authorities having jurisdiction, whether specified or not.
   2. Where services are indicated as Contractor's responsibility, engage a qualified testing agency to perform these quality-control services.
      a. Contractor shall not employ same entity engaged by Owner, unless agreed to in writing by Owner.
   3. Notify testing agencies at least 24 hours in advance of time when Work that requires testing or inspecting will be performed.

4. Where quality-control services are indicated as Contractor's responsibility, submit a certified written report, in duplicate, of each quality-control service.
5. Testing and inspecting requested by Contractor and not required by the Contract Documents are Contractor's responsibility.
6. Submit additional copies of each written report directly to authorities having jurisdiction, when they so direct.

C. Manufacturer's Field Services: Where indicated, engage a factory-authorized service representative to inspect field-assembled components and equipment installation, including service connections. Report results in writing as specified in Section 013300 - Submittal Procedures.

D. Manufacturer's Technical Services: Where indicated, engage a manufacturer's technical representative to observe and inspect the Work. Manufacturer's technical representative's services include participation in preinstallation conferences, examination of substrates and conditions, verification of materials, observation of Installer activities, inspection of completed portions of the Work, and submittal of written reports.

E. Retesting/Reinspecting: Regardless of whether original tests or inspections were Contractor's responsibility, provide quality-control services, including retesting and reinspecting, for construction that replaced Work that failed to comply with the Contract Documents.

F. Testing Agency Responsibilities: Cooperate with Architect and Contractor in performance of duties. Provide qualified personnel to perform required tests and inspections.
1. Notify Architect and Contractor promptly of irregularities or deficiencies observed in the Work during performance of its services.
2. Determine the location from which test samples will be taken and in which in-situ tests are conducted.
3. Conduct and interpret tests and inspections and state in each report whether tested and inspected work complies with or deviates from requirements.
4. Submit a certified written report, in duplicate, of each test, inspection, and similar quality-control service through Contractor.
5. Do not release, revoke, alter, or increase the Contract Document requirements or approve or accept any portion of the Work.
6. Do not perform any duties of Contractor.

G. Associated Services: Cooperate with agencies performing required tests, inspections, and similar quality-control services, and provide reasonable auxiliary services as requested. Notify agency sufficiently in advance of operations to permit assignment of personnel. Provide the following:
1. Access to the Work.
2. Incidental labor and facilities necessary to facilitate tests and inspections.
3. Adequate quantities of representative samples of materials that require testing and inspecting. Assist agency in obtaining samples.
4. Facilities for storage and field curing of test samples.
5. Delivery of samples to testing agencies.
6. Preliminary design mix proposed for use for material mixes that require control by testing agency.
7. Security and protection for samples and for testing and inspecting equipment at Project site.

H. Coordination: Coordinate sequence of activities to accommodate required quality-assurance and -control services with a minimum of delay and to avoid necessity of removing and replacing construction to accommodate testing and inspecting.
1. Schedule times for tests, inspections, obtaining samples, and similar activities.

I. Schedule of Tests and Inspections: Prepare a schedule of tests, inspections, and similar quality-control services required by the Contract Documents as a component of Contractor's quality-control plan. Coordinate and submit concurrently with Contractor's construction schedule. Update as the Work progresses.
   1. Distribution: Distribute schedule to Owner, Architect, testing agencies, and each party involved in performance of portions of the Work where tests and inspections are required.

1.11 SPECIAL TESTS AND INSPECTIONS

A. Special Tests and Inspections: Owner will engage a qualified special inspector to conduct special tests and inspections required by authorities having jurisdiction as the responsibility of Owner, as indicated in Statement of Special Inspections attached to this Section, and as follows:

B. Special Tests and Inspections: Conducted by a qualified special inspector as required by authorities having jurisdiction, as indicated in individual Specification Sections and in Statement of Special Inspections attached to this Section, and as follows:
   1. Verifying that manufacturer maintains detailed fabrication and quality-control procedures and reviews the completeness and adequacy of those procedures to perform the Work.
   2. Notifying Architect and Contractor promptly of irregularities and deficiencies observed in the Work during performance of its services.
   3. Submitting a certified written report of each test, inspection, and similar quality-control service to Architect with copy to Contractor and to authorities having jurisdiction.
   4. Submitting a final report of special tests and inspections at Substantial Completion, which includes a list of unresolved deficiencies.
   5. Interpreting tests and inspections and stating in each report whether tested and inspected work complies with or deviates from the Contract Documents.
   6. Retesting and reinspecting corrected work.

PART 2 PRODUCTS (NOT USED)

PART 3 EXECUTION

3.1 ACCEPTABLE TESTING AGENCIES

A. To be determined by Owner prior to construction start

3.2 TEST AND INSPECTION LOG

A. Test and Inspection Log: Prepare a record of tests and inspections. Include the following:
   1. Date test or inspection was conducted.
   2. Description of the Work tested or inspected.
   3. Date test or inspection results were transmitted to Architect.
   4. Identification of testing agency or special inspector conducting test or inspection.

B. Maintain log at Project site. Post changes and revisions as they occur. Provide access to test and inspection log for Architect's reference during normal working hours.

3.3 REPAIR AND PROTECTION

A. General: On completion of testing, inspecting, sample taking, and similar services, repair damaged construction and restore substrates and finishes.
   1. Provide materials and comply with installation requirements specified in other Specification Sections or matching existing substrates and finishes. Restore patched areas and extend restoration into adjoining areas with durable seams that are as invisible as possible. Comply with the Contract Document requirements for cutting and patching in Section 017300 - Execution.

B. Protect construction exposed by or for quality-control service activities.

C. Repair and protection are Contractor's responsibility, regardless of the assignment of responsibility for quality-control services.

END OF SECTION

SECTION 014200 - REFERENCES

PART 1 GENERAL

1.1 RELATED DOCUMENTS

A. Drawings and general provisions of the Contract, including General and Supplementary Conditions and other Division 01 Specification Sections, apply to this Section.

1.2 DEFINITIONS

A. General: Basic Contract definitions are included in the Conditions of the Contract.

B. "Approved": When used to convey Architect's action on Contractor's submittals, applications, and requests, "approved" is limited to Architect's duties and responsibilities as stated in the Conditions of the Contract.

C. "Directed": A command or instruction by Architect. Other terms including "requested," "authorized," "selected," "required," and "permitted" have the same meaning as "directed."

D. "Indicated": Requirements expressed by graphic representations or in written form on Drawings, in Specifications, and in other Contract Documents. Other terms including "shown," "noted," "scheduled," and "specified" have the same meaning as "indicated."

E. "Regulations": Laws, ordinances, statutes, and lawful orders issued by authorities having jurisdiction, and rules, conventions, and agreements within the construction industry that control performance of the Work.

F. "Furnish": Supply and deliver to Project site, ready for unloading, unpacking, assembly, installation, and similar operations.

G. "Install": Unload, temporarily store, unpack, assemble, erect, place, anchor, apply, work to dimension, finish, cure, protect, clean, and similar operations at Project site.

H. "Provide": Furnish and install, complete and ready for the intended use.

I. "Project Site": Space available for performing construction activities. The extent of Project site is shown on Drawings and may or may not be identical with the description of the land on which Project is to be built.

1.3 INDUSTRY STANDARDS

A. Applicability of Standards: Unless the Contract Documents include more stringent requirements, applicable construction industry standards have the same force and effect as if bound or copied directly into the Contract Documents to the extent referenced. Such standards are made a part of the Contract Documents by reference.

B. Publication Dates: Comply with standards in effect as of date of the Contract Documents unless otherwise indicated.

C. Copies of Standards: Each entity engaged in construction on Project should be familiar with industry standards applicable to its construction activity. Copies of applicable standards are not bound with the Contract Documents.

1. Where copies of standards are needed to perform a required construction activity, obtain copies directly from publication source.

1.4 ABBREVIATIONS AND ACRONYMS

A. Industry Organizations: Where abbreviations and acronyms are used in Specifications or other Contract Documents, they shall mean the recognized name of the entities indicated in Gale's "Encyclopedia of Associations: National Organizations of the U.S." or in Columbia Books' "National Trade & Professional Associations of the United States."

B. Industry Organizations: Where abbreviations and acronyms are used in Specifications or other Contract Documents, they shall mean the recognized name of the entities in the following list. This information is subject to change and is believed to be accurate as of the date of the Contract Documents.

1. AABC - Associated Air Balance Council; www.aabc.com.
2. AAMA - American Architectural Manufacturers Association; www.aamanet.org.

3. AAPFCO - Association of American Plant Food Control Officials; www.aapfco.org.
4. AASHTO - American Association of State Highway and Transportation Officials; www.transportation.org.
5. AATCC - American Association of Textile Chemists and Colorists; www.aatcc.org.
6. ABMA - American Bearing Manufacturers Association; www.americanbearings.org.
7. ACI - American Concrete Institute; (Formerly: ACI International); www.concrete.org.
8. ACPA - American Concrete Pipe Association; www.concrete-pipe.org.
9. AEIC - Association of Edison Illuminating Companies, Inc. (The); www.aeic.org.
10. AF&PA - American Forest & Paper Association; www.afandpa.org.
11. AGA - American Gas Association; www.aga.org.
12. AHAM - Association of Home Appliance Manufacturers; www.aham.org.
13. AHRI - Air-Conditioning, Heating, and Refrigeration Institute (The); www.ahrinet.org.
14. AI - Asphalt Institute; www.asphaltinstitute.org.
15. AIA - American Institute of Architects (The); www.aia.org.
16. AISC - American Institute of Steel Construction; www.aisc.org.
17. AISI - American Iron and Steel Institute; www.steel.org.
18. AITC - American Institute of Timber Construction; www.aitc-glulam.org.
19. AMCA - Air Movement and Control Association International, Inc.; www.amca.org.
20. ANSI - American National Standards Institute; www.ansi.org.
21. AOSA - Association of Official Seed Analysts, Inc.; www.aosaseed.com.
22. APA - APA - The Engineered Wood Association; www.apawood.org.
23. APA - Architectural Precast Association; www.archprecast.org.
24. API - American Petroleum Institute; www.api.org.
25. ARI - Air-Conditioning & Refrigeration Institute; (See AHRI).
26. ARI - American Refrigeration Institute; (See AHRI).
27. ARMA - Asphalt Roofing Manufacturers Association; www.asphaltroofing.org.
28. ASCE - American Society of Civil Engineers; www.asce.org.
29. ASCE/SEI - American Society of Civil Engineers/Structural Engineering Institute; (See ASCE).
30. ASHRAE - American Society of Heating, Refrigerating and Air-Conditioning Engineers; www.ashrae.org.
31. ASME - ASME International; (American Society of Mechanical Engineers); www.asme.org.
32. ASSE - American Society of Safety Engineers (The); www.asse.org.
33. ASSE - American Society of Sanitary Engineering; www.asse-plumbing.org.
34. ASTM - ASTM International; (American Society for Testing and Materials International); www.astm.org.
35. ATIS - Alliance for Telecommunications Industry Solutions; www.atis.org.
36. AWEA - American Wind Energy Association; www.awea.org.
37. AWI - Architectural Woodwork Institute; www.awinet.org.
38. AWMAC - Architectural Woodwork Manufacturers Association of Canada; www.awmac.com.
39. AWPA - American Wood Protection Association; (Formerly: American Wood-Preservers' Association); www.awpa.com.
40. AWS - American Welding Society; www.aws.org.
41. AWWA - American Water Works Association; www.awwa.org.
42. BHMA - Builders Hardware Manufacturers Association; www.buildershardware.com.
43. BIA - Brick Industry Association (The); www.gobrick.com.
44. BICSI - BICSI, Inc.; www.bicsi.org.

45. BIFMA - BIFMA International; (Business and Institutional Furniture Manufacturer's Association); www.bifma.com.
46. BISSC - Baking Industry Sanitation Standards Committee; www.bissc.org.
47. BOCA - BOCA; (Building Officials and Code Administrators International Inc.); (See ICC).
48. BWF - Badminton World Federation; (Formerly: International Badminton Federation); www.bwfbadminton.org.
49. CDA - Copper Development Association; www.copper.org.
50. CEA - Canadian Electricity Association; www.electricity.ca.
51. CEA - Consumer Electronics Association; www.ce.org.
52. CFFA - Chemical Fabrics & Film Association, Inc.; www.chemicalfabricsandfilm.com.
53. CFSEI - Cold-Formed Steel Engineers Institute; www.cfsei.org.
54. CGA - Compressed Gas Association; www.cganet.com.
55. CIMA - Cellulose Insulation Manufacturers Association; www.cellulose.org.
56. CISCA - Ceilings & Interior Systems Construction Association; www.cisca.org.
57. CISPI - Cast Iron Soil Pipe Institute; www.cispi.org.
58. CLFMI - Chain Link Fence Manufacturers Institute; www.chainlinkinfo.org.
59. CPA - Composite Panel Association; www.pbmdf.com.
60. CRI - Carpet and Rug Institute (The); www.carpet-rug.org.
61. CRRC - Cool Roof Rating Council; www.coolroofs.org.
62. CRSI - Concrete Reinforcing Steel Institute; www.crsi.org.
63. CSA - Canadian Standards Association; www.csa.ca.
64. CSA - CSA International; (Formerly: IAS - International Approval Services); www.csa-international.org.
65. CSI - Construction Specifications Institute (The); www.csinet.org.
66. CSSB - Cedar Shake & Shingle Bureau; www.cedarbureau.org.
67. CTI - Cooling Technology Institute; (Formerly: Cooling Tower Institute); www.cti.org.
68. CWC - Composite Wood Council; (See CPA).
69. DASMA - Door and Access Systems Manufacturers Association; www.dasma.com.
70. DHI - Door and Hardware Institute; www.dhi.org.
71. ECA - Electronic Components Association; www.ec-central.org.
72. ECAMA - Electronic Components Assemblies & Materials Association; (See ECA).
73. EIA - Electronic Industries Alliance; (See TIA).
74. EIMA - EIFS Industry Members Association; www.eima.com.
75. EJMA - Expansion Joint Manufacturers Association, Inc.; www.ejma.org.
76. ESD - ESD Association; (Electrostatic Discharge Association); www.esda.org.
77. ESTA - Entertainment Services and Technology Association; (See PLASA).
78. EVO - Efficiency Valuation Organization; www.evo-world.org.
79. FM Approvals - FM Approvals LLC; www.fmglobal.com.
80. FM Global - FM Global; (Formerly: FMG - FM Global); www.fmglobal.com.
81. FRSA - Florida Roofing, Sheet Metal & Air Conditioning Contractors Association, Inc.; www.floridaroof.com.
82. FSA - Fluid Sealing Association; www.fluidsealing.com.
83. FSC - Forest Stewardship Council U.S.; www.fscus.org.
84. GA - Gypsum Association; www.gypsum.org.
85. GANA - Glass Association of North America; www.glasswebsite.com.
86. GS - Green Seal; www.greenseal.org.
87. HI - Hydraulic Institute; www.pumps.org.
88. HI/GAMA - Hydronics Institute/Gas Appliance Manufacturers Association; (See AHRI).
89. HMMA - Hollow Metal Manufacturers Association; (See NAAMM).
90. HPVA - Hardwood Plywood & Veneer Association; www.hpva.org.

91. HPW - H. P. White Laboratory, Inc.; www.hpwhite.com.
92. IAPSC - International Association of Professional Security Consultants; www.iapsc.org.
93. IAS - International Approval Services; (See CSA).
94. ICBO - International Conference of Building Officials; (See ICC).
95. ICC - International Code Council; www.iccsafe.org.
96. ICEA - Insulated Cable Engineers Association, Inc.; www.icea.net.
97. ICPA - International Cast Polymer Alliance; www.icpa-hq.org.
98. ICRI - International Concrete Repair Institute, Inc.; www.icri.org.
99. IEC - International Electrotechnical Commission; www.iec.ch.
100. IEEE - Institute of Electrical and Electronics Engineers, Inc. (The); www.ieee.org.
101. IES - Illuminating Engineering Society; (Formerly: Illuminating Engineering Society of North America); www.ies.org.
102. IESNA - Illuminating Engineering Society of North America; (See IES).
103. IEST - Institute of Environmental Sciences and Technology; www.iest.org.
104. IGMA - Insulating Glass Manufacturers Alliance; www.igmaonline.org.
105. IGSHPA - International Ground Source Heat Pump Association; www.igshpa.okstate.edu.
106. ILI - Indiana Limestone Institute of America, Inc.; www.iliai.com.
107. Intertek - Intertek Group; (Formerly: ETL SEMCO; Intertek Testing Service NA); www.intertek.com.
108. ISA - International Society of Automation (The); (Formerly: Instrumentation, Systems, and Automation Society); www.isa.org.
109. ISAS - Instrumentation, Systems, and Automation Society (The); (See ISA).
110. ISFA - International Surface Fabricators Association; (Formerly: International Solid Surface Fabricators Association); www.isfanow.org.
111. ISO - International Organization for Standardization; www.iso.org.
112. ISSFA - International Solid Surface Fabricators Association; (See ISFA).
113. ITU - International Telecommunication Union; www.itu.int/home.
114. KCMA - Kitchen Cabinet Manufacturers Association; www.kcma.org.
115. LMA - Laminating Materials Association; (See CPA).
116. LPI - Lightning Protection Institute; www.lightning.org.
117. MBMA - Metal Building Manufacturers Association; www.mbma.com.
118. MCA - Metal Construction Association; www.metalconstruction.org.
119. MFMA - Maple Flooring Manufacturers Association, Inc.; www.maplefloor.org.
120. MFMA - Metal Framing Manufacturers Association, Inc.; www.metalframingmfg.org.
121. MHIA - Material Handling Industry of America; www.mhia.org.
122. MIA - Marble Institute of America; www.marble-institute.com.
123. MMPA - Moulding & Millwork Producers Association; (Formerly: Wood Moulding & Millwork Producers Association); www.wmmpa.com.
124. MPI - Master Painters Institute; www.paintinfo.com.
125. MSS - Manufacturers Standardization Society of The Valve and Fittings Industry Inc.; www.mss-hq.org.
126. NAAMM - National Association of Architectural Metal Manufacturers; www.naamm.org.
127. NACE - NACE International; (National Association of Corrosion Engineers International); www.nace.org.
128. NADCA - National Air Duct Cleaners Association; www.nadca.com.
129. NAIMA - North American Insulation Manufacturers Association; www.naima.org.
130. NBGQA - National Building Granite Quarries Association, Inc.; www.nbgqa.com.
131. NCAA - National Collegiate Athletic Association (The); www.ncaa.org.
132. NCMA - National Concrete Masonry Association; www.ncma.org.
133. NEBB - National Environmental Balancing Bureau; www.nebb.org.

134. NECA - National Electrical Contractors Association; www.necanet.org.
135. NeLMA - Northeastern Lumber Manufacturers Association; www.nelma.org.
136. NEMA - National Electrical Manufacturers Association; www.nema.org.
137. NETA - InterNational Electrical Testing Association; www.netaworld.org.
138. NFHS - National Federation of State High School Associations; www.nfhs.org.
139. NFPA - NFPA; (National Fire Protection Association); www.nfpa.org.
140. NFPA - NFPA International; (See NFPA).
141. NFRC - National Fenestration Rating Council; www.nfrc.org.
142. NHLA - National Hardwood Lumber Association; www.nhla.com.
143. NLGA - National Lumber Grades Authority; www.nlga.org.
144. NOFMA - National Oak Flooring Manufacturers Association; (See NWFA).
145. NOMMA - National Ornamental & Miscellaneous Metals Association; www.nomma.org.
146. NRCA - National Roofing Contractors Association; www.nrca.net.
147. NRMCA - National Ready Mixed Concrete Association; www.nrmca.org.
148. NSF - NSF International; (National Sanitation Foundation International); www.nsf.org.
149. NSPE - National Society of Professional Engineers; www.nspe.org.
150. NSSGA - National Stone, Sand & Gravel Association; www.nssga.org.
151. NTMA - National Terrazzo & Mosaic Association, Inc. (The); www.ntma.com.
152. NWFA - National Wood Flooring Association; www.nwfa.org.
153. PCI - Precast/Prestressed Concrete Institute; www.pci.org.
154. PDI - Plumbing & Drainage Institute; www.pdionline.org.
155. PLASA - PLASA; (Formerly: ESTA - Entertainment Services and Technology Association); www.plasa.org.
156. RCSC - Research Council on Structural Connections; www.boltcouncil.org.
157. RFCI - Resilient Floor Covering Institute; www.rfci.com.
158. RIS - Redwood Inspection Service; www.redwoodinspection.com.
159. SAE - SAE International; (Society of Automotive Engineers); www.sae.org.
160. SCTE - Society of Cable Telecommunications Engineers; www.scte.org.
161. SDI - Steel Deck Institute; www.sdi.org.
162. SDI - Steel Door Institute; www.steeldoor.org.
163. SEFA - Scientific Equipment and Furniture Association; www.sefalabs.com.
164. SEI/ASCE - Structural Engineering Institute/American Society of Civil Engineers; (See ASCE).
165. SIA - Security Industry Association; www.siaonline.org.
166. SJI - Steel Joist Institute; www.steeljoist.org.
167. SMA - Screen Manufacturers Association; www.smainfo.org.
168. SMACNA - Sheet Metal and Air Conditioning Contractors' National Association; www.smacna.org.
169. SMPTE - Society of Motion Picture and Television Engineers; www.smpte.org.
170. SPFA - Spray Polyurethane Foam Alliance; www.sprayfoam.org.
171. SPIB - Southern Pine Inspection Bureau; www.spib.org.
172. SPRI - Single Ply Roofing Industry; www.spri.org.
173. SRCC - Solar Rating and Certification Corporation; www.solar-rating.org.
174. SSINA - Specialty Steel Industry of North America; www.ssina.com.
175. SSPC - SSPC: The Society for Protective Coatings; www.sspc.org.
176. STI - Steel Tank Institute; www.steeltank.com.
177. SWI - Steel Window Institute; www.steelwindows.com.
178. SWPA - Submersible Wastewater Pump Association; www.swpa.org.
179. TCA - Tilt-Up Concrete Association; www.tilt-up.org.

180. TCNA - Tile Council of North America, Inc.; (Formerly: Tile Council of America); www.tileusa.com.
181. TEMA - Tubular Exchanger Manufacturers Association, Inc.; www.tema.org.
182. TIA - Telecommunications Industry Association; (Formerly: TIA/EIA - Telecommunications Industry Association/Electronic Industries Alliance); www.tiaonline.org.
183. TIA/EIA - Telecommunications Industry Association/Electronic Industries Alliance; (See TIA).
184. TMS - The Masonry Society; www.masonrysociety.org.
185. TPI - Truss Plate Institute; www.tpinst.org.
186. TPI - Turfgrass Producers International; www.turfgrasssod.org.
187. TRI - Tile Roofing Institute; www.tileroofing.org.
188. UBC - Uniform Building Code; (See ICC).
189. UL - Underwriters Laboratories Inc.; www.ul.com.
190. UNI - Uni-Bell PVC Pipe Association; www.uni-bell.org.
191. USAV - USA Volleyball; www.usavolleyball.org.
192. USGBC - U.S. Green Building Council; www.usgbc.org.
193. USITT - United States Institute for Theatre Technology, Inc.; www.usitt.org.
194. WASTEC - Waste Equipment Technology Association; www.wastec.org.
195. WCLIB - West Coast Lumber Inspection Bureau; www.wclib.org.
196. WCMA - Window Covering Manufacturers Association; www.wcmanet.org.
197. WDMA - Window & Door Manufacturers Association; www.wdma.com.
198. WI - Woodwork Institute; (Formerly: WIC - Woodwork Institute of California); www.wicnet.org.
199. WMMPA - Wood Moulding & Millwork Producers Association; (See MMPA).
200. WSRCA - Western States Roofing Contractors Association; www.wsrca.com.
201. WPA - Western Wood Products Association; www.wwpa.org.

C. Code Agencies: Where abbreviations and acronyms are used in Specifications or other Contract Documents, they shall mean the recognized name of the entities in the following list. This information is believed to be accurate as of the date of the Contract Documents.
   1. IAPMO - International Association of Plumbing and Mechanical Officials; www.iapmo.org.
   2. ICC - International Code Council; www.iccsafe.org.
   3. ICC-ES - ICC Evaluation Service, LLC; www.icc-es.org.

D. Federal Government Agencies: Where abbreviations and acronyms are used in Specifications or other Contract Documents, they shall mean the recognized name of the entities in the following list. Information is subject to change and is up-to-date as of the date of the Contract Documents.
   1. COE - Army Corps of Engineers; www.usace.army.mil.
   2. CPSC - Consumer Product Safety Commission; www.cpsc.gov.
   3. DOC - Department of Commerce; National Institute of Standards and Technology; www.nist.gov.
   4. DOD - Department of Defense; http://dodssp.daps.dla.mil.
   5. DOE - Department of Energy; www.energy.gov.
   6. EPA - Environmental Protection Agency; www.epa.gov.
   7. FAA - Federal Aviation Administration; www.faa.gov.
   8. FG - Federal Government Publications; www.gpo.gov.
   9. GSA - General Services Administration; www.gsa.gov.
   10. HUD - Department of Housing and Urban Development; www.hud.gov.
   11. LBL - Lawrence Berkeley National Laboratory; Environmental Energy Technologies Division; http://eetd.lbl.gov.
   12. OSHA - Occupational Safety & Health Administration; www.osha.gov.

13. SD - Department of State; www.state.gov.
14. TRB - Transportation Research Board; National Cooperative Highway Research Program; www.trb.org.
15. USDA - Department of Agriculture; Agriculture Research Service; U.S. Salinity Laboratory; www.ars.usda.gov.
16. USDA - Department of Agriculture; Rural Utilities Service; www.usda.gov.
17. USDJ - Department of Justice; Office of Justice Programs; National Institute of Justice; www.ojp.usdoj.gov.
18. USP - U.S. Pharmacopeia; www.usp.org.
19. USPS - United States Postal Service; www.usps.com.

E. Standards and Regulations: Where abbreviations and acronyms are used in Specifications or other Contract Documents, they shall mean the recognized name of the standards and regulations in the following list. This information is subject to change and is believed to be accurate as of the date of the Contract Documents.
1. CFR - Code of Federal Regulations; Available from Government Printing Office; www.gpo.gov/fdsys.
2. DOD - Department of Defense; Military Specifications and Standards; Available from Department of Defense Single Stock Point; http://dodssp.daps.dla.mil.
3. DSCC - Defense Supply Center Columbus; (See FS).
4. FED-STD - Federal Standard; (See FS).
5. FS - Federal Specification; Available from Department of Defense Single Stock Point; http://dodssp.daps.dla.mil.
   a. Available from Defense Standardization Program; www.dsp.dla.mil.
   b. Available from General Services Administration; www.gsa.gov.
   c. Available from National Institute of Building Sciences/Whole Building Design Guide; www.wbdg.org/ccb.
6. MILSPEC - Military Specification and Standards; (See DOD).
7. USAB - United States Access Board; www.access-board.gov.
8. USATBCB - U.S. Architectural & Transportation Barriers Compliance Board; (See USAB).

F. State Government Agencies: Where abbreviations and acronyms are used in Specifications or other Contract Documents, they shall mean the recognized name of the entities in the following list. This information is subject to change and is believed to be accurate as of the date of the Contract Documents.
1. CBHF - State of California; Department of Consumer Affairs; Bureau of Electronic Appliance and Repair, Home Furnishings and Thermal Insulation; www.bearhfti.ca.gov.
2. CCR - California Code of Regulations; Office of Administrative Law; California Title 24 Energy Code; www.calregs.com.
3. CDHS - California Department of Health Services; (See CDPH).
4. CDPH - California Department of Public Health; Indoor Air Quality Program; www.cal-iaq.org.
5. CPUC - California Public Utilities Commission; www.cpuc.ca.gov.
6. SCAQMD - South Coast Air Quality Management District; www.aqmd.gov.
7. TFS - Texas Forest Service; Forest Resource Development and Sustainable Forestry; http://txforestservice.tamu.edu.

PART 2 PRODUCTS (NOT USED)
PART 3 EXECUTION (NOT USED)
END OF SECTION

SECTION 015000 - TEMPORARY FACILITIES AND CONTROLS

PART 1 GENERAL

1.1 RELATED DOCUMENTS

A. Drawings and general provisions of the Contract, including General and Supplementary Conditions and other Division 01 Specification Sections, apply to this Section.

1.2 SUMMARY

A. Section includes requirements for temporary utilities, support facilities, and security and protection facilities.

B. Related Requirements:

1. Section 011000 - Summary for work restrictions and limitations on utility interruptions.

1.3 USE CHARGES

A. General: Installation and removal of and use charges for temporary facilities shall be included in the Contract Sum unless otherwise indicated. Allow other entities to use temporary services and facilities without cost, including, but not limited to, Owner's construction forces, Architect, occupants of Project, testing agencies, and authorities having jurisdiction.

B. Water and Septic Service from Existing System: Water from Owner's existing water system is available for use without metering and without payment of use charges. Provide connections and extensions of services as required for construction operations.

C. Electric Power Service from Existing System: Electric power from Owner's existing system is available for use without metering and without payment of use charges. Provide connections and extensions of services as required for construction operations.

1.4 INFORMATIONAL SUBMITTALS

A. Site Plan: Show temporary facilities, utility hookups, staging areas, and parking areas for construction personnel.

B. Erosion- and Sedimentation-Control Plan: Show compliance with requirements of EPA Construction General Permit or authorities having jurisdiction, whichever is more stringent.

C. Fire-Safety Program: Show compliance with requirements of NFPA 241 and authorities having jurisdiction. Indicate Contractor personnel responsible for management of fire-prevention program.

D. Moisture-Protection Plan: Describe procedures and controls for protecting materials and construction from water absorption and damage.

1. Describe delivery, handling, and storage provisions for materials subject to water absorption or water damage.
2. Indicate procedures for discarding water-damaged materials, protocols for mitigating water intrusion into completed Work, and replacing water-damaged Work.
3. Indicate sequencing of work that requires water, such as sprayed fire-resistive materials, plastering, and terrazzo grinding, and describe plans for dealing with water from these operations. Show procedures for verifying that wet construction has dried sufficiently to permit installation of finish materials.

E. Dust- and HVAC-Control Plan: Submit coordination drawing and narrative that indicates the dust- and HVAC-control measures proposed for use, proposed locations, and proposed time frame for their operation. Identify further options if proposed measures are later determined to be inadequate. Include the following:

1. Locations of dust-control partitions at each phase of work.
2. HVAC system isolation schematic drawing.
3. Location of proposed air-filtration system discharge.
4. Waste handling procedures.
5. Other dust-control measures.

1.5 QUALITY ASSURANCE

A. Electric Service: Comply with NECA, NEMA, and UL standards and regulations for temporary electric service. Install service to comply with NFPA 70.

B. Tests and Inspections: Arrange for authorities having jurisdiction to test and inspect each temporary utility before use. Obtain required certifications and permits.

C. Accessible Temporary Egress: Comply with applicable provisions in the U.S. Architectural & Transportation Barriers Compliance Board's ADA-ABA Accessibility Guidelines and ICC/ANSI A117.1.

1.6 PROJECT CONDITIONS

A. Temporary Use of Permanent Facilities: Engage Installer of each permanent service to assume responsibility for operation, maintenance, and protection of each permanent service during its use as a construction facility before Owner's acceptance, regardless of previously assigned responsibilities.

PART 2 PRODUCTS

2.1 MATERIALS

A. Chain-Link Fencing: Minimum 2-inch, 0.148-inch- thick, galvanized-steel, chain-link fabric fencing; minimum 6 feet high with galvanized-steel pipe posts; minimum 2-3/8-inch- OD line posts and 2-7/8-inch- OD corner and pull posts, with 1-5/8-inch- OD top rails.

B. Portable Chain-Link Fencing: Minimum 2-inch, 0.148-inch- thick, galvanized-steel, chain-link fabric fencing; minimum 6 feet high with galvanized-steel pipe posts; minimum 2-3/8-inch- OD line posts and 2-7/8-inch- OD corner and pull posts, with 1-5/8-inch- OD top and bottom rails. Provide concrete bases for supporting posts.

C. Polyethylene Sheet: Reinforced, fire-resistive sheet, 10-mil minimum thickness, with flame-spread rating of 15 or less per ASTM E 84 and passing NFPA 701 Test Method 2.

D. Dust-Control Adhesive-Surface Walk-off Mats: Provide mats minimum 36 by 60 inches.

E. Insulation: Unfaced mineral-fiber blanket, manufactured from glass, slag wool, or rock wool; with maximum flame-spread and smoke-developed indexes of 25 and 50, respectively.

2.2 TEMPORARY FACILITIES

A. Field Offices, General: Prefabricated or mobile units with serviceable finishes, temperature controls, and foundations adequate for normal loading.

B. Storage and Fabrication Sheds: Provide sheds sized, furnished, and equipped to accommodate materials and equipment for construction operations.

1. Store combustible materials apart from building.

2.3 EQUIPMENT

A. Fire Extinguishers: Portable, UL rated; with class and extinguishing agent as required by locations and classes of fire exposures.

B. HVAC Equipment: Unless Owner authorizes use of permanent HVAC system, provide vented, self-contained, liquid-propane-gas or fuel-oil heaters with individual space thermostatic control.

1. Use of gasoline-burning space heaters, open-flame heaters, or salamander-type heating units is prohibited.
2. Heating Units: Listed and labeled for type of fuel being consumed, by a qualified testing agency acceptable to authorities having jurisdiction, and marked for intended location and application.
3. Permanent HVAC System: If Owner authorizes use of permanent HVAC system for temporary use during construction, provide filter with MERV of 8 at each return-air grille in system and remove at end of construction and clean HVAC system as required in Section 017700 - Closeout Procedures.

C. Air-Filtration Units: Primary and secondary HEPA-filter-equipped portable units with four-stage filtration. Provide single switch for emergency shutoff. Configure to run continuously.

PART 3 EXECUTION

3.1 INSTALLATION, GENERAL

A. Locate facilities where they will serve Project adequately and result in minimum interference with performance of the Work. Relocate and modify facilities as required by progress of the Work.
   1. Locate facilities to limit site disturbance as specified in Section 011000 - Summary.

B. Provide each facility ready for use when needed to avoid delay. Do not remove until facilities are no longer needed or are replaced by authorized use of completed permanent facilities.

3.2 TEMPORARY UTILITY INSTALLATION

A. General: Install temporary service or connect to existing service.
   1. Arrange with utility company, Owner, and existing users for time when service can be interrupted, if necessary, to make connections for temporary services.

B. Water Service: Connect to Owner's existing water service facilities. Clean and maintain water service facilities in a condition acceptable to Owner. At Substantial Completion, restore these facilities to condition existing before initial use.

C. Sanitary Facilities: Provide temporary toilets, wash facilities, and drinking water for use of construction personnel. Comply with requirements of authorities having jurisdiction for type, number, location, operation, and maintenance of fixtures and facilities. Coordinate with Owner for location of temporary facilities.

D. Isolation of Work Areas in Occupied Facilities: Prevent dust, fumes, and odors from entering existing areas and rooms of this station.
   1. Prior to commencing work, isolate the HVAC system in area where work is to be performed according to coordination drawings.
      a. Disconnect supply and return ductwork in work area from HVAC systems servicing occupied areas.
      b. Maintain negative air pressure within work area using HEPA-equipped air-filtration units, starting with commencement of temporary partition construction, and continuing until removal of temporary partitions is complete.
   2. Maintain dust partitions during the Work. Use vacuum collection attachments on dust-producing equipment. Isolate limited work within occupied areas using portable dust-containment devices.
   3. Perform daily construction cleanup and final cleanup using approved, HEPA-filter-equipped vacuum equipment.

E. Ventilation and Humidity Control: Provide temporary ventilation required by construction activities for curing or drying of completed installations or for protecting installed construction from adverse effects of high humidity. Select equipment that will not have a harmful effect on completed installations or elements being installed. Coordinate ventilation requirements to produce ambient condition required and minimize energy consumption.
   1. Provide dehumidification systems when required to reduce substrate moisture levels to level required to allow installation or application of finishes.

F. Electric Power Service: Connect to Owner's existing electric power service. Maintain equipment in a condition acceptable to Owner.

G. Electric Power Service: Provide electric power service and distribution system of sufficient size, capacity, and power characteristics required for construction operations.
   1. Install electric power service underground unless otherwise indicated.
   2. Connect temporary service to Owner's existing power source, as directed by Owner.

H. Lighting: Provide temporary lighting with local switching that provides adequate illumination for construction operations, observations, inspections, and traffic conditions.
   1. Install and operate temporary lighting that fulfills security and protection requirements without operating entire system.

3.3 SUPPORT FACILITIES INSTALLATION

A. Parking: Use designated areas of Owner's existing parking areas for construction personnel.
B. Traffic Control: Comply with requirements of authorities having jurisdiction.
   1. Protect existing site improvements to remain including curbs, pavement and utilities.
   2. Maintain access for fire-fighting equipment and access to fire hydrants.
C. Dewatering Facilities and Drains: Comply with requirements of authorities having jurisdiction. Maintain Project site, excavations, and construction free of water.
   1. Dispose of rainwater in a lawful manner that will not result in flooding Project or adjoining properties or endanger permanent Work or temporary facilities.
   2. Remove snow and ice as required to minimize accumulations.
D. Project Signs: Provide Project signs as indicated. Unauthorized signs are not permitted.
   1. Temporary Signs: Provide other signs as indicated and as required to inform public and individuals seeking entrance to Project.
      a. Provide temporary, directional signs for construction personnel and visitors.
   2. Maintain and touchup signs so they are legible at all times.
E. Waste Disposal Facilities: Provide waste-collection containers in sizes adequate to handle waste from construction operations. Comply with requirements of authorities having jurisdiction. Comply with progress cleaning requirements in Section 017300 - Execution.
F. Lifts and Hoists: Provide facilities necessary for hoisting materials and personnel.
   1. Truck cranes and similar devices used for hoisting materials are considered "tools and equipment" and not temporary facilities.

3.4 SECURITY AND PROTECTION FACILITIES INSTALLATION

A. Protection of Existing Facilities: Protect existing vegetation, equipment, structures, utilities, and other improvements at Project site and on adjacent properties, except those indicated to be removed or altered. Repair damage to existing facilities.
B. Environmental Protection: Provide protection, operate temporary facilities, and conduct construction as required to comply with environmental regulations and that minimize possible air, waterway, and subsoil contamination or pollution or other undesirable effects.
   1. Comply with work restrictions specified in Section 011000 - Summary.
C. Pest Control: Engage pest-control service to recommend practices to minimize attraction and harboring of rodents, roaches, and other pests and to perform extermination and control procedures at regular intervals so Project will be free of pests and their residues at Substantial Completion. Perform control operations lawfully, using environmentally safe materials.
D. Temporary Egress: Maintain temporary egress from existing occupied facilities as indicated and as required by authorities having jurisdiction.
E. Temporary Enclosures: Provide temporary enclosures for protection of construction, in progress and completed, from exposure, foul weather, other construction operations, and similar activities. Provide temporary weathertight enclosure for building exterior.
   1. Where heating or cooling is needed and permanent enclosure is incomplete, insulate temporary enclosures.
F. Temporary Partitions: Provide floor-to-ceiling dustproof partitions to limit dust and dirt migration and to separate areas where access is not necessary from fumes and noise.
   1. Seal joints and perimeter. Equip partitions with gasketed dustproof doors and security locks where openings are required.
   2. Protect air-handling equipment.
   3. Provide walk-off mats at each entrance through temporary partition.
G. Temporary Fire Protection: Install and maintain temporary fire-protection facilities of types needed to protect against reasonably predictable and controllable fire losses. Comply with NFPA 241; manage fire-prevention program.
   1. Prohibit smoking in construction areas.

2. Supervise welding operations, combustion-type temporary heating units, and similar sources of fire ignition according to requirements of authorities having jurisdiction.
3. Develop and supervise an overall fire-prevention and -protection program for personnel at Project site. Review needs with local fire department and establish procedures to be followed. Instruct personnel in methods and procedures. Post warnings and information.

3.5 MOISTURE AND MOLD CONTROL

A. Contractor's Moisture-Protection Plan: Avoid trapping water in finished work. Document visible signs of mold that may appear during construction.
B. Exposed Construction Phase: Before installation of weather barriers, when materials are subject to wetting and exposure and to airborne mold spores, protect as follows:
   1. Protect porous materials from water damage.
   2. Protect stored and installed material from flowing or standing water.
   3. Keep porous and organic materials from coming into prolonged contact with concrete.
   4. Remove standing water from decks.
   5. Keep deck openings covered or dammed.
C. Partially Enclosed Construction Phase: After installation of weather barriers but before full enclosure and conditioning of building, when installed materials are still subject to infiltration of moisture and ambient mold spores, protect as follows:
   1. Do not load or install drywall or other porous materials or components, or items with high organic content, into partially enclosed building.
   2. Keep interior spaces reasonably clean and protected from water damage.
   3. Periodically collect and remove waste containing cellulose or other organic matter.
   4. Discard or replace water-damaged material.
   5. Do not install material that is wet.
   6. Discard, replace, or clean stored or installed material that begins to grow mold.
   7. Perform work in a sequence that allows any wet materials adequate time to dry before enclosing the material in drywall or other interior finishes.
D. Controlled Construction Phase of Construction: After completing and sealing of the building enclosure but prior to the full operation of permanent HVAC systems, maintain as follows:
   1. Control moisture and humidity inside building by maintaining effective dry-in conditions.
   2. Use permanent HVAC system to control humidity.
   3. Comply with manufacturer's written instructions for temperature, relative humidity, and exposure to water limits.
      a. Hygroscopic materials that may support mold growth, including wood and gypsum-based products, that become wet during the course of construction and remain wet for 48 hours are considered defective.
      b. Measure moisture content of materials that have been exposed to moisture during construction operations or after installation. Record readings beginning at time of exposure and continuing daily for 48 hours. Identify materials containing moisture levels higher than allowed. Report findings in writing to Architect.
      c. Remove materials that cannot be completely restored to their manufactured moisture level within 48 hours.

3.6 OPERATION, TERMINATION, AND REMOVAL

A. Supervision: Enforce strict discipline in use of temporary facilities. To minimize waste and abuse, limit availability of temporary facilities to essential and intended uses.
B. Maintenance: Maintain facilities in good operating condition until removal.
   1. Maintain operation of temporary enclosures, heating, cooling, humidity control, ventilation, and similar facilities on a 24-hour basis where required to achieve indicated results and to avoid possibility of damage.

C. Temporary Facility Changeover: Do not change over from using temporary security and protection facilities to permanent facilities until Substantial Completion.
D. Termination and Removal: Remove each temporary facility when need for its service has ended, when it has been replaced by authorized use of a permanent facility, or no later than Substantial Completion. Complete or, if necessary, restore permanent construction that may have been delayed because of interference with temporary facility. Repair damaged Work, clean exposed surfaces, and replace construction that cannot be satisfactorily repaired.
    1. Materials and facilities that constitute temporary facilities are property of Contractor.
    2. At Substantial Completion, repair, renovate, and clean permanent facilities used during construction period. Comply with final cleaning requirements specified in Section 017700 - Closeout Procedures.

END OF SECTION

SECTION 016000 - PRODUCT REQUIREMENTS

PART 1 GENERAL

1.1 RELATED DOCUMENTS

A. Drawings and general provisions of the Contract, including General and Supplementary Conditions and other Division 01 Specification Sections, apply to this Section.

1.2 SUMMARY

A. Section includes administrative and procedural requirements for selection of products for use in Project; product delivery, storage, and handling; manufacturers' standard warranties on products; special warranties; and comparable products.

B. Related Requirements:

1. Section 012500 - SUBSTITUTION PROCEDURES for requests for substitutions.
2. Section 014200 - References for applicable industry standards for products specified.

1.3 DEFINITIONS

A. Products: Items obtained for incorporating into the Work, whether purchased for Project or taken from previously purchased stock. The term "product" includes the terms "material," "equipment," "system," and terms of similar intent.

1. Named Products: Items identified by manufacturer's product name, including make or model number or other designation shown or listed in manufacturer's published product literature, that is current as of date of the Contract Documents.
2. New Products: Items that have not previously been incorporated into another project or facility. Products salvaged or recycled from other projects are not considered new products.
3. Comparable Product: Product that is demonstrated and approved through submittal process to have the indicated qualities related to type, function, dimension, in-service performance, physical properties, appearance, and other characteristics that equal or exceed those of specified product.

B. Basis-of-Design Product Specification: A specification in which a specific manufacturer's product is named and accompanied by the words "basis-of-design product," including make or model number or other designation, to establish the significant qualities related to type, function, dimension, in-service performance, physical properties, appearance, and other characteristics for purposes of evaluating comparable products of additional manufacturers named in the specification.

1.4 ACTION SUBMITTALS

A. Comparable Product Requests: Submit request for consideration of each comparable product. Identify product or fabrication or installation method to be replaced. Include Specification Section number and title and Drawing numbers and titles.

1. Include data to indicate compliance with the requirements specified in "Comparable Products" Article.
2. Architect's Action: If necessary, Architect will request additional information or documentation for evaluation within 5 working days of receipt of a comparable product request. Architect will notify Contractor of approval or rejection of proposed comparable product request within 10 working days of receipt of request, or 5 working days of receipt of additional information or documentation, whichever is later.
   a. Form of Approval: As specified in Section 013300 - Submittal Procedures.
   b. Use product specified if Architect does not issue a decision on use of a comparable product request within time allocated.

B. Basis-of-Design Product Specification Submittal: Comply with requirements in Section 013300 - Submittal Procedures. Show compliance with requirements.

1.5 QUALITY ASSURANCE

A. Compatibility of Options: If Contractor is given option of selecting between two or more products for use on Project, select product compatible with products previously selected, even if previously selected products were also options.
   1. Each Contractor is responsible for providing products and construction methods compatible with products and construction methods of other contractors.
   2. If a dispute arises between contractors over concurrently selectable but incompatible products, Architect will determine which products shall be used.

1.6 PRODUCT DELIVERY, STORAGE, AND HANDLING

A. Deliver, store, and handle products using means and methods that will prevent damage, deterioration, and loss, including theft and vandalism. Comply with manufacturer's written instructions.

B. Delivery and Handling:
   1. Schedule delivery to minimize long-term storage at Project site and to prevent overcrowding of construction spaces.
   2. Coordinate delivery with installation time to ensure minimum holding time for items that are flammable, hazardous, easily damaged, or sensitive to deterioration, theft, and other losses.
   3. Deliver products to Project site in an undamaged condition in manufacturer's original sealed container or other packaging system, complete with labels and instructions for handling, storing, unpacking, protecting, and installing.
   4. Inspect products on delivery to determine compliance with the Contract Documents and to determine that products are undamaged and properly protected.

C. Storage:
   1. Store products to allow for inspection and measurement of quantity or counting of units.
   2. Store materials in a manner that will not endanger Project structure.
   3. Store products that are subject to damage by the elements, under cover in a weathertight enclosure above ground, with ventilation adequate to prevent condensation.
   4. Protect foam plastic from exposure to sunlight, except to extent necessary for period of installation and concealment.
   5. Comply with product manufacturer's written instructions for temperature, humidity, ventilation, and weather-protection requirements for storage.
   6. Protect stored products from damage and liquids from freezing.
   7. Provide a secure location and enclosure at Project site for storage of materials and equipment by Owner's construction forces. Coordinate location with Owner.

1.7 PRODUCT WARRANTIES

A. Warranties specified in other Sections shall be in addition to, and run concurrent with, other warranties required by the Contract Documents. Manufacturer's disclaimers and limitations on product warranties do not relieve Contractor of obligations under requirements of the Contract Documents.
   1. Manufacturer's Warranty: Written warranty furnished by individual manufacturer for a particular product and specifically endorsed by manufacturer to Owner.
   2. Special Warranty: Written warranty required by the Contract Documents to provide specific rights for Owner.

B. Special Warranties: Prepare a written document that contains appropriate terms and identification, ready for execution.
   1. Manufacturer's Standard Form: Modified to include Project-specific information and properly executed.
   2. Specified Form: When specified forms are included with the Specifications, prepare a written document using indicated form properly executed.

3. See other Sections for specific content requirements and particular requirements for submitting special warranties.

C. Submittal Time: Comply with requirements in Section 017700 - Closeout Procedures.

PART 2 PRODUCTS

2.1 PRODUCT SELECTION PROCEDURES

A. General Product Requirements: Provide products that comply with the Contract Documents, are undamaged and, unless otherwise indicated, are new at time of installation.
   1. Provide products complete with accessories, trim, finish, fasteners, and other items needed for a complete installation and indicated use and effect.
   2. Standard Products: If available, and unless custom products or nonstandard options are specified, provide standard products of types that have been produced and used successfully in similar situations on other projects.
   3. Owner reserves the right to limit selection to products with warranties not in conflict with requirements of the Contract Documents.
   4. Where products are accompanied by the term "as selected," Architect will make selection.
   5. Descriptive, performance, and reference standard requirements in the Specifications establish salient characteristics of products.
   6. Or Equal: For products specified by name and accompanied by the term "or equal," or "or approved equal," or "or approved," comply with requirements in "Comparable Products" Article to obtain approval for use of an unnamed product.

B. Product Selection Procedures:
   1. Product: Where Specifications name a single manufacturer and product, provide the named product that complies with requirements. Comparable products or substitutions for Contractor's convenience will not be considered.
   2. Manufacturer/Source: Where Specifications name a single manufacturer or source, provide a product by the named manufacturer or source that complies with requirements. Comparable products or substitutions for Contractor's convenience will not be considered.
   3. Products:
      a. Restricted List: Where Specifications include a list of names of both manufacturers and products, provide one of the products listed that complies with requirements. Comparable products or substitutions for Contractor's convenience will not be considered unless otherwise indicated.
      b. Nonrestricted List: Where Specifications include a list of names of both available manufacturers and products, provide one of the products listed, or an unnamed product, that complies with requirements. Comply with requirements in "Comparable Products" Article for consideration of an unnamed product.
   4. Manufacturers:
      a. Restricted List: Where Specifications include a list of manufacturers' names, provide a product by one of the manufacturers listed that complies with requirements. Comparable products or substitutions for Contractor's convenience will not be considered unless otherwise indicated.
      b. Nonrestricted List: Where Specifications include a list of available manufacturers, provide a product by one of the manufacturers listed, or a product by an unnamed manufacturer, that complies with requirements. Comply with requirements in "Comparable Products" Article for consideration of an unnamed manufacturer's product.
   5. Basis-of-Design Product: Where Specifications name a product, or refer to a product indicated on Drawings, and include a list of manufacturers, provide the specified or indicated product or a comparable product by one of the other named manufacturers. Drawings and Specifications indicate sizes, profiles, dimensions, and other characteristics

that are based on the product named. Comply with requirements in "Comparable Products" Article for consideration of an unnamed product by one of the other named manufacturers.

C. Visual Matching Specification: Where Specifications require "match Architect's sample and/or match existing", provide a product that complies with requirements and matches Architect's sample. Architect's decision will be final on whether a proposed product matches.
   1. If no product available within specified category matches and complies with other specified requirements, comply with requirements in Section 012500 - SUBSTITUTION PROCEDURES for proposal of product.

D. Visual Selection Specification: Where Specifications include the phrase "as selected by Architect from manufacturer's full range" or similar phrase, select a product that complies with requirements. Architect will select color, gloss, pattern, density, or texture from manufacturer's product line that includes both standard and premium items.

2.2 COMPARABLE PRODUCTS

A. Conditions for Consideration: Architect will consider Contractor's request for comparable product when the following conditions are satisfied. If the following conditions are not satisfied, Architect may return requests without action, except to record noncompliance with these requirements:
   1. Evidence that the proposed product does not require revisions to the Contract Documents, that it is consistent with the Contract Documents and will produce the indicated results, and that it is compatible with other portions of the Work.
   2. Detailed comparison of significant qualities of proposed product with those named in the Specifications. Significant qualities include attributes such as performance, weight, size, durability, visual effect, and specific features and requirements indicated.
   3. Evidence that proposed product provides specified warranty.
   4. List of similar installations for completed projects with project names and addresses and names and addresses of architects and owners, if requested.
   5. Samples, if requested.

PART 3 EXECUTION (NOT USED)

END OF SECTION

SECTION 017300 - EXECUTION

PART 1 GENERAL

1.1 RELATED DOCUMENTS

A. Drawings and general provisions of the Contract, including General and Supplementary Conditions and other Division 01 Specification Sections, apply to this Section.

1.2 SUMMARY

A. Section includes general administrative and procedural requirements governing execution of the Work including, but not limited to, the following:
   1. Construction layout.
   2. Field engineering and surveying.
   3. Installation of the Work.
   4. Cutting and patching.
   5. Coordination of Owner-installed products.
   6. Progress cleaning.
   7. Starting and adjusting.
   8. Protection of installed construction.

B. Related Requirements:
   1. Section 011000 - Summary for limits on use of Project site.
   2. Section 013300 - Submittal Procedures for submitting surveys.
   3. Section 017700 - Closeout Procedures for submitting final property survey with Project Record Documents, recording of Owner-accepted deviations from indicated lines and levels, and final cleaning.
   4. Section 024119 - Selective Demolition for demolition and removal of selected portions of the building.

1.3 DEFINITIONS

A. Cutting: Removal of in-place construction necessary to permit installation or performance of other work.

B. Patching: Fitting and repair work required to restore construction to original conditions after installation of other work.

1.4 INFORMATIONAL SUBMITTALS

A. Qualification Data: For land surveyor.

B. Certificates: Submit certificate signed by land surveyor certifying the location and elevation of improvements comply with requirements.

C. Cutting and Patching Plan: Submit plan describing procedures at least 10 days prior to the cutting and patching will be performed. Include the following information:
   1. Extent: Describe reason for and extend of each occurrence of cutting and patching.
   2. Changes to In-Place Construction: Describe anticipated results. Include changes to structural elements and operating components as well as changes in building appearances and other significant visual elements.
   3. Products: List products to be used for patching and firms or entities that will perform patching work.
   4. Dates: Indicate when cutting and patching will be performed.
   5. Utilities and Mechanical and Electrical Systems: List services and systems that cutting and patching procedures will disturb or affect. List services and systems that will be relocated and those that will be temporarily out of service. Indication of how long services and system will be disrupted.

D. Landfill receipts: Submit copy of receipts issued by landfill facility, licensed to accept hazardous materials, for hazardous waste disposal.

E. Certified Surveys: Submit two copies by land surveyor.

F. Final Property Survey: Submit 10 copies showing the Work performed and record survey data.

1.5 QUALITY ASSURANCE

A. Cutting and Patching: Comply with requirements for and limitations on cutting and patching of construction elements.
   1. Contractor is required to allow Owner to inspect all walls, ceilings, all finished spaces and all elements therein to validate the quality of the work and the presence and location of all required elements in the walls, ceilings and all finished spaces.
   2. Concealed Elements: Contractor is required to allow Owner to inspect all work before it is concealed.
   3. Structural Elements: When cutting and patching structural elements, notify Architect of locations and details of cutting and await directions from Architect before proceeding. Shore, brace, and support structural elements during cutting and patching. Do not cut and patch structural elements in a manner that could change their load-carrying capacity or increase deflection.
   4. Operational Elements: Do not cut and patch operating elements and related components in a manner that results in reducing their capacity to perform as intended or that results in increased maintenance or decreased operational life or safety. Operational elements include the following:
      a. Primary operational systems and equipment.
      b. Fire separation assemblies.
      c. Air or smoke barriers.
      d. Fire-suppression systems.
      e. Mechanical systems piping and ducts.
      f. Control systems.
      g. Communication systems.
      h. Fire-detection and -alarm systems.
      i. Conveying systems.
      j. Electrical wiring systems.
      k. Operating systems of special construction.
   5. Other Construction Elements: Do not cut and patch other construction elements or components in a manner that could change their load-carrying capacity, that results in reducing their capacity to perform as intended, or that results in increased maintenance or decreased operational life or safety. Other construction elements include but are not limited to the following:
      a. Water, moisture, or vapor barriers.
      b. Membranes and flashings.
      c. Exterior curtain-wall construction.
      d. Sprayed fire-resistive material.
      e. Equipment supports.
      f. Piping, ductwork, vessels, and equipment.
      g. Noise- and vibration-control elements and systems.
   6. Visual Elements: Do not cut and patch construction in a manner that results in visual evidence of cutting and patching. Do not cut and patch exposed construction in a manner that would, in Architect's opinion, reduce the building's aesthetic qualities. Remove and replace construction that has been cut and patched in a visually unsatisfactory manner.

B. Cutting and Patching Conference: Before proceeding, meet at Project site with parties involved in cutting and patching, including mechanical and electrical trades. Review areas of potential interference and conflict. Coordinate procedures and resolve potential conflicts before proceeding.

C. Manufacturer's Installation Instructions: Obtain and maintain on-site manufacturer's written recommendations and instructions for installation of products and equipment.
D. Land Surveyor Qualifications: A professional land surveyor who is legally qualified to practice in jurisdiction where project is located and who is experienced in providing land-surveying services of the kind indicated.

PART 2 PRODUCTS

2.1 MATERIALS

A. General: Comply with requirements specified in other Sections.
B. In-Place Materials: Use materials for patching identical to in-place materials. For exposed surfaces, use materials that visually match in-place adjacent surfaces to the fullest extent possible.
   1. If identical materials are unavailable or cannot be used, use materials that, when installed, will provide a match acceptable to Architect for the visual and functional performance of in-place materials.

PART 3 EXECUTION

3.1 EXAMINATION

A. Existing Conditions: The existence and location of underground and other utilities and construction indicated as existing are not guaranteed. Before beginning sitework, investigate and verify the existence and location of underground utilities, mechanical and electrical systems, and other construction affecting the Work.
   1. Before construction, verify the location and invert elevation at points of connection of sanitary sewer, storm sewer, and water-service piping; underground electrical services, and other utilities.
   2. Furnish location data for work related to Project that must be performed by public utilities serving Project site.
B. Examination and Acceptance of Conditions: Before proceeding with each component of the Work, examine substrates, areas, and conditions, with Installer or Applicator present where indicated, for compliance with requirements for installation tolerances and other conditions affecting performance. Record observations.
   1. Examine roughing-in for mechanical and electrical systems to verify actual locations of connections before equipment and fixture installation.
   2. Owner will have the option to inspect all walls before Gypsum board is applied.
   3. No existing and abandoned items (i.e. plumbing lines, gas lines, electrical conduit) will be left in place. All existing items will be removed and disposed of.
   4. Examine walls, floors, and roofs for suitable conditions where products and systems are to be installed.
   5. Verify compatibility with and suitability of substrates, including compatibility with existing finishes or primers.
   6. Owner will examine all concealed spaces before wall face or ceilings are installed. Contractor will let Owner know in weekly construction meetings when concealed spaces will be available for inspection.
C. Written Report: Where a written report listing conditions detrimental to performance of the Work is required by other Sections, include the following:
   1. Description of the Work.
   2. List of detrimental conditions, including substrates.
   3. List of unacceptable installation tolerances.
   4. Recommended corrections.
D. Proceed with installation only after unsatisfactory conditions have been corrected. Proceeding with the Work indicates acceptance of surfaces and conditions.

3.2 PREPARATION

A. Existing Utility Information: Furnish information to Owner that is necessary to adjust, move, or relocate existing utility structures, utility poles, lines, services, or other utility appurtenances located in or affected by construction. Coordinate with authorities having jurisdiction.

B. Field Measurements: Take field measurements as required to fit the Work properly. Recheck measurements before installing each product. Where portions of the Work are indicated to fit to other construction, verify dimensions of other construction by field measurements before fabrication. Coordinate fabrication schedule with construction progress to avoid delaying the Work.

C. Space Requirements: Verify space requirements and dimensions of items shown diagrammatically on Drawings.

D. Review of Contract Documents and Field Conditions: Immediately on discovery of the need for clarification of the Contract Documents caused by differing field conditions outside the control of Contractor, submit a request for information to Architect according to requirements in Section 013100 - Project Management and Coordination.

3.3 CONSTRUCTION LAYOUT

A. Verification: Before proceeding to lay out the Work, verify layout information shown on Drawings, in relation to the property survey and existing benchmarks. If discrepancies are discovered, notify Architect promptly.

B. General: Engage a land surveyor to lay out the work using accepted surveying practices.

1. Establish benchmarks and control points to set lines and levels at each story of construction and elsewhere as needed to locate each element of project.
2. Establish limits on use of project site.
3. Establish dimensions within tolerances indicated. Do not scale drawings to obtain required dimensions.
4. Inform installers of lines and levels to which they must comply.
5. Check the location, level and plumb, of every major element as the Work progresses.
6. Notify Architect when deviations from required lines and levels exceed allowable tolerances.
7. Close site surveys with an error of closure equal to or less than the standard established by authorities having jurisdiction.

C. Storage of all construction tools and materials will be maintained in/on locations that have been approved by Owner prior to commencement of construction activities.

D. Site Improvements: Locate and lay out site improvements, including pavements, grading, fill and topsoil placement, utility slopes, and rim and invert elevations.

E. Building Lines and Levels: Locate and lay out control lines and levels for structures, building foundations, column grids, and floor levels, including those required for mechanical and electrical work. Transfer survey markings and elevations for use with control lines and levels. Level foundations and piers from two or more locations.

F. Record Log: Maintain a log of layout control work. Record deviations from required lines and levels. Include beginning and ending dates and times of surveys, weather conditions, name and duty of each survey party member, and types of instruments and tapes used. Make the log available for reference by Architect.

G. Contractor will secure and lock all supplies and tools at the end of each day in the designated contractor laydown areas. Owner is not responsible for tools or supplies that go missing. No tools or supplies will be left in the construction area without prior Owner approval.

3.4 HOURS OF WORK

1. Work taking place at the Existing Emergency Department or adjacent areas on the first floor must take place between 6:00 am and 4:00 PM and be scheduled through owner.

3.5 FIELD ENGINEERING

A. Reference Points: Locate existing permanent benchmarks, control points, and similar reference points before beginning the Work. Preserve and protect permanent benchmarks and control points during construction operations.
   1. Do not change or relocate existing benchmarks or control points without prior written approval of Architect. Report lost or destroyed permanent benchmarks or control points promptly. Report the need to relocate permanent benchmarks or control points to Architect before proceeding.
   2. Replace lost or destroyed permanent benchmarks and control points promptly. Base replacements on the original survey control points.
B. Benchmarks: Establish and maintain a minimum of two permanent benchmarks on Project site, referenced to data established by survey control points. Comply with authorities having jurisdiction for type and size of benchmark.
   1. Record benchmark locations, with horizontal and vertical data, on Project Record Documents.
   2. Where the actual location or elevation of layout points cannot be marked, provide temporary reference points sufficient to locate the Work.
   3. Remove temporary reference points when no longer needed. Restore marked construction to its original condition.

3.6 INSTALLATION

A. General: Locate the Work and components of the Work accurately, in correct alignment and elevation, as indicated.
   1. Make vertical work plumb and make horizontal work level.
   2. Where space is limited, install components to maximize space available for maintenance and ease of removal for replacement.
   3. Conceal pipes, ducts, and wiring in finished areas unless otherwise indicated.
   4. Maintain minimum headroom clearance of 96 inches in occupied spaces and 90 inches in unoccupied spaces.
B. Comply with manufacturer's written instructions and recommendations for installing products in applications indicated.
C. Install products at the time and under conditions that will ensure the best possible results. Maintain conditions required for product performance until Substantial Completion.
D. Conduct construction operations so no part of the Work is subjected to damaging operations or loading in excess of that expected during normal conditions of occupancy.
E. Sequence the Work and allow adequate clearances to accommodate movement of construction items on site and placement in permanent locations.
F. Tools and Equipment: Do not use tools or equipment that produce harmful noise levels.
G. Templates: Obtain and distribute, to the parties involved templates for work specified to be factory prepared and field installed. Check Shop Drawings of other work to confirm that adequate provisions are made for locating and installing products to comply with indicated requirements.
H. Attachment: Provide blocking and attachment plates and anchors and fasteners of adequate size and number to securely anchor each component in place, accurately located and aligned with other portions of the Work. Where size and type of attachments are not indicated, verify size and type required for load conditions.
   1. Mounting Heights: Where mounting heights are not indicated, mount components at heights directed by Architect.
   2. Allow for building movement, including thermal expansion and contraction.
   3. Coordinate installation of anchorages. Furnish setting drawings, templates, and directions for installing anchorages, including sleeves, concrete inserts, anchor bolts, and items with

integral anchors, that are to be embedded in concrete or masonry. Deliver such items to Project site in time for installation.

I. Joints: Make joints of uniform width. Where joint locations in exposed work are not indicated, arrange joints for the best visual effect. Fit exposed connections together to form hairline joints.

J. Hazardous Materials: Use products, cleaners, and installation materials that are not considered hazardous.

3.7 CUTTING AND PATCHING

A. Cutting and Patching, General: Employ skilled workers to perform cutting and patching. Proceed with cutting and patching at the earliest feasible time, and complete without delay.
   1. Cut in-place construction to provide for installation of other components or performance of other construction, and subsequently patch as required to restore surfaces to their original condition.

B. Existing Warranties: Remove, replace, patch, and repair materials and surfaces cut or damaged during installation or cutting and patching operations, by methods and with materials so as not to void existing warranties.

C. Temporary Support: Provide temporary support of work to be cut.

D. Protection: Protect in-place construction during cutting and patching to prevent damage. Provide protection from adverse weather conditions for portions of Project that might be exposed during cutting and patching operations.

E. Existing Utility Services and Mechanical/Electrical Systems: Where existing services/systems are required to be removed, relocated, or abandoned, bypass such services/systems before cutting to prevent interruption to occupied areas.

F. Cutting: Cut in-place construction by sawing, drilling, breaking, chipping, grinding, and similar operations, including excavation, using methods least likely to damage elements retained or adjoining construction. If possible, review proposed procedures with original Installer; comply with original Installer's written recommendations.
   1. In general, use hand or small power tools designed for sawing and grinding, not hammering and chopping. Cut holes and slots neatly to minimum size required, and with minimum disturbance of adjacent surfaces. Temporarily cover openings when not in use.
   2. Finished Surfaces: Cut or drill from the exposed or finished side into concealed surfaces.
   3. Concrete and Masonry: Cut using a cutting machine, such as an abrasive saw or a diamond-core drill.
   4. Excavating and Backfilling: Comply with requirements in applicable Sections where required by cutting and patching operations.
   5. Mechanical and Electrical Services: Cut off pipe or conduit in walls or partitions to be removed. Cap, valve, or plug and seal remaining portion of pipe or conduit to prevent entrance of moisture or other foreign matter after cutting.
   6. Proceed with patching after construction operations requiring cutting are complete.

G. Patching: Patch construction by filling, repairing, refinishing, closing up, and similar operations following performance of other work. Patch with durable seams that are as invisible as practicable. Provide materials and comply with installation requirements specified in other Sections, where applicable.
   1. Inspection: Where feasible, test and inspect patched areas after completion to demonstrate physical integrity of installation.
   2. Exposed Finishes: Restore exposed finishes of patched areas and extend finish restoration into retained adjoining construction in a manner that will minimize evidence of patching and refinishing.
      a. Clean piping, conduit, and similar features before applying paint or other finishing materials.
      b. Restore damaged pipe covering to its original condition.

3. Floors and Walls: Where walls or partitions that are removed extend one finished area into another, patch and repair floor and wall surfaces in the new space. Provide an even surface of uniform finish, color, texture, and appearance. Remove in-place floor and wall coverings and replace with new materials, if necessary, to achieve uniform color and appearance.
    a. Where patching occurs in a painted surface, prepare substrate and apply primer and intermediate paint coats appropriate for substrate over the patch, and apply final paint coat over entire unbroken surface containing the patch. Provide additional coats until patch blends with adjacent surfaces.
4. Ceilings: Patch, repair, or rehang in-place ceilings as necessary to provide an even-plane surface of uniform appearance.
5. Exterior Building Enclosure: Patch components in a manner that restores enclosure to a weathertight condition and ensures thermal and moisture integrity of building enclosure.

H. Cleaning: Clean areas and spaces where cutting and patching are performed. Remove paint, mortar, oils, putty, and similar materials from adjacent finished surfaces.

3.8 OWNER-INSTALLED PRODUCTS

A. Site Access: Provide access to Project site for Owner's construction personnel.
B. Coordination: Coordinate construction and operations of the Work with work performed by Owner's construction personnel.
    1. Construction Schedule: Inform Owner of Contractor's preferred construction schedule for Owner's portion of the Work. Adjust construction schedule based on a mutually agreeable timetable. Notify Owner if changes to schedule are required due to differences in actual construction progress.
    2. Preinstallation Conferences: Include Owner's construction personnel at preinstallation conferences covering portions of the Work that are to receive Owner's work. Attend preinstallation conferences conducted by Owner's construction personnel if portions of the Work depend on Owner's construction.

3.9 PROGRESS CLEANING

A. General: Clean Project site and work areas daily, including common areas. Enforce requirements strictly. Dispose of materials lawfully.
    1. Comply with requirements in NFPA 241 for removal of combustible waste materials and debris.
    2. Do not hold waste materials more than seven days during normal weather or three days if the temperature is expected to rise above 80 deg F.
    3. Containerize hazardous and unsanitary waste materials separately from other waste. Mark containers appropriately and dispose of legally, according to regulations.
        a. Use containers intended for holding waste materials of type to be stored.
    4. Coordinate progress cleaning for joint-use areas where Contractor and other contractors are working concurrently.
B. Site: Maintain Project site free of waste materials and debris.
C. Work Areas: Clean areas where work is in progress to the level of cleanliness necessary for proper execution of the Work.
    1. Remove liquid spills promptly.
    2. Where dust would impair proper execution of the Work, broom-clean or vacuum the entire work area, as appropriate.
D. Installed Work: Keep installed work clean. Clean installed surfaces according to written instructions of manufacturer or fabricator of product installed, using only cleaning materials specifically recommended. If specific cleaning materials are not recommended, use cleaning materials that are not hazardous to health or property and that will not damage exposed surfaces.

E. Concealed Spaces: Remove debris from concealed spaces before enclosing the space.
F. Exposed Surfaces in Finished Areas: Clean exposed surfaces and protect as necessary to ensure freedom from damage and deterioration at time of Substantial Completion.
G. Waste Disposal: Do not bury or burn waste materials on-site. Do not wash waste materials down sewers or into waterways.
H. During handling and installation, clean and protect construction in progress and adjoining materials already in place. Apply protective covering where required to ensure protection from damage or deterioration at Substantial Completion.
I. Clean and provide maintenance on completed construction as frequently as necessary through the remainder of the construction period. Adjust and lubricate operable components to ensure operability without damaging effects.
J. Limiting Exposures: Supervise construction operations to assure that no part of the construction, completed or in progress, is subject to harmful, dangerous, damaging, or otherwise deleterious exposure during the construction period.

3.10 STARTING AND ADJUSTING

A. Start equipment and operating components to confirm proper operation. Remove malfunctioning units, replace with new units, and retest.
B. Adjust equipment for proper operation. Adjust operating components for proper operation without binding.
C. Test each piece of equipment to verify proper operation. Test and adjust controls and safeties. Replace damaged and malfunctioning controls and equipment.
D. Manufacturer's Field Service: Comply with qualification requirements in Section 014000 - Quality Requirements.

3.11 PROTECTION OF INSTALLED CONSTRUCTION

A. Provide final protection and maintain conditions that ensure installed Work is without damage or deterioration at time of Substantial Completion.
B. Comply with manufacturer's written instructions for temperature and relative humidity.

END OF SECTION

SECTION 017419 - CONSTRUCTION WASTE MANAGEMENT AND DISPOSAL

PART 1 GENERAL

1.1 RELATED DOCUMENTS

A. Drawings and general provisions of the Contract, including General and Supplementary Conditions and other Division 01 Specification Sections, apply to this Section.

1.2 SUMMARY

A. Section includes administrative and procedural requirements for the following:
   1. Salvaging nonhazardous demolition and construction waste.
   2. Recycling nonhazardous demolition and construction waste.
   3. Disposing of nonhazardous demolition and construction waste.

B. Related Requirements:
   1. Section 024116 "Structure Demolition" for disposition of waste resulting from demolition of buildings, structures, and site improvements.
   2. Section 024119 "Selective Demolition" for disposition of waste resulting from partial demolition of buildings, structures, and site improvements, and for disposition of hazardous waste.

1.3 DEFINITIONS

A. Construction Waste: Building and site improvement materials and other solid waste resulting from construction, remodeling, renovation, or repair operations. Construction waste includes packaging.

B. Demolition Waste: Building and site improvement materials resulting from demolition or selective demolition operations.

C. Disposal: Removal off-site of demolition and construction waste and subsequent sale, recycling, reuse, or deposit in landfill or incinerator acceptable to authorities having jurisdiction.

D. Recycle: Recovery of demolition or construction waste for subsequent processing in preparation for reuse.

E. Salvage: Recovery of demolition or construction waste and subsequent sale or reuse in another facility.

F. Salvage and Reuse: Recovery of demolition or construction waste and subsequent incorporation into the Work.

1.4 ACTION SUBMITTALS

A. Waste Management Plan: Consult with Owner regarding Salvaging, recycling and disposal of construction and demolition waste. Wherever possible recycle construction and/or demolition waste.

PART 2 PRODUCTS (NOT USED)

PART 3 EXECUTION

3.1 PLAN IMPLEMENTATION

A. General: Implement approved waste management process as agreed with Owner. plan. Provide handling, containers, storage, signage, transportation, and other items as required to implement waste management plan during the entire duration of the Contract.

B. Site Access and Temporary Controls: Conduct waste management operations to ensure minimum interference with roads, streets, walks, walkways, and other adjacent occupied and used facilities.
   1. Designate and label specific areas on Project site necessary for separating materials that are to be salvaged, recycled, reused, donated, and sold.
   2. Comply with Section 015000 "Temporary Facilities and Controls" for controlling dust and dirt, environmental protection, and noise control.

3.2 SALVAGING DEMOLITION WASTE

A. Salvaged Items for Reuse in the Work: Salvage items for reuse and handle as follows:

1. Clean salvaged items.
2. Pack or crate items after cleaning. Identify contents of containers with label indicating elements, date of removal, quantity, and location where removed.
3. Store items in a secure area until installation.
4. Protect items from damage during transport and storage.
5. Install salvaged items to comply with installation requirements for new materials and equipment. Provide connections, supports, and miscellaneous materials necessary to make items functional for use indicated.

B. Salvaged Items for Sale and Donation: Are not permitted on Project site. Owner will have first right of refusal on all salvaged waste material. Salvaged waste cannot be stored on site.

C. Salvaged Items for Owner's Use: Salvage items for Owner's use and handle as follows:
1. Clean salvaged items.
2. Pack or crate items after cleaning. Identify contents of containers with label indicating elements, date of removal, quantity, and location where removed.
3. Store items in a secure area until delivery to Owner.
4. Transport items to Owner's storage area designated by Owner.
5. Protect items from damage during transport and storage.

D. Doors and Hardware: Brace open end of door frames. Except for removing door closers, leave door hardware attached to doors.

E. Equipment: Drain tanks, piping, and fixtures. Seal openings with caps or plugs. Protect equipment from exposure to weather.

F. Plumbing Fixtures: Separate by type and size.

G. Lighting Fixtures: Separate lamps by type and protect from breakage.

H. Electrical Devices: Separate switches, receptacles, switchgear, transformers, meters, panelboards, circuit breakers, and other devices by type.

3.3 RECYCLING CONSTRUCTION WASTE

A. Packaging:
1. Cardboard and Boxes: Break down packaging into flat sheets. Bundle and store in a dry location.
2. Pallets: As much as possible, require deliveries using pallets to remove pallets from Project site. For pallets that remain on-site, break down pallets into component wood pieces and comply with requirements for recycling wood.
3. Crates: Break down crates into component wood pieces and comply with requirements for recycling wood.

B. Wood Materials:
1. Clean Cut-Offs of Lumber: Grind or chip into small pieces.
2. Clean Sawdust: Bag sawdust that does not contain painted or treated wood.

3.4 DISPOSAL OF WASTE

A. General: Except for items or materials to be salvaged, recycled, or otherwise reused, remove waste materials from Project site and legally dispose of them in a landfill or incinerator acceptable to authorities having jurisdiction. No construction waste can be sold or given away on the project site.
1. Except as otherwise specified, do not allow waste materials that are to be disposed of accumulate on-site.
2. Remove and transport debris in a manner that will prevent spillage on adjacent surfaces and areas.

B. Burning: Do not burn waste materials.

C. Disposal: Remove waste materials and dispose of at designated spoil areas on Owner's property.

D. Disposal: Remove waste materials from Owner's property and legally dispose of them.

END OF SECTION

SECTION 017700 - CLOSEOUT PROCEDURES

PART 1 GENERAL

1.1 RELATED DOCUMENTS

A. Drawings and general provisions of the Contract, including General and Supplementary Conditions and other Division 01 Specification Sections, apply to this Section.

1.2 SUMMARY

A. Section includes administrative and procedural requirements for contract closeout, including, but not limited to, the following:
   1. Substantial Completion procedures.
   2. Final completion procedures.
   3. Warranties.
   4. Final cleaning.
   5. Repair of the Work.

B. Related Requirements:
   1. Section 017300 - Execution for progress cleaning of Project site.
   2. Section 017823 - Operation and Maintenance Data for operation and maintenance manual requirements.
   3. Section 017839 - Project Record Documents for submitting record Drawings, record Specifications, and record Product Data.

1.3 ACTION SUBMITTALS

A. Product Data: For cleaning agents.

B. Contractor's List of Incomplete Items: Initial submittal at Substantial Completion.

C. Certified List of Incomplete Items: Final submittal at Final Completion.

1.4 CLOSEOUT SUBMITTALS

A. Certificates of Release: From authorities having jurisdiction.

B. Certificate of Insurance: For continuing coverage.

C. Field Report: For pest control inspection.

1.5 MAINTENANCE MATERIAL SUBMITTALS

A. Schedule of Maintenance Material Items: For maintenance material submittal items specified in other Sections.

1.6 SUBSTANTIAL COMPLETION PROCEDURES

A. Contractor's List of Incomplete Items: Prepare and submit a list of items to be completed and corrected (Contractor's punch list), indicating the value of each item on the list and reasons why the Work is incomplete.

B. Submittals Prior to Substantial Completion: Complete the following a minimum of 10 days prior to requesting inspection for determining date of Substantial Completion. List items below that are incomplete at time of request.
   1. Certificates of Release: Obtain and submit releases from authorities having jurisdiction permitting Owner unrestricted use of the Work and access to services and utilities. Include occupancy permits, operating certificates, and similar releases.
   2. Submit closeout submittals specified in other Division 01 Sections, including project record documents, operation and maintenance manuals, final completion construction photographic documentation, damage or settlement surveys, property surveys, and similar final record information.
   3. Submit closeout submittals specified in individual Sections, including specific warranties, workmanship bonds, maintenance service agreements, final certifications, and similar documents.
   4. Submit maintenance material submittals specified in individual Sections, including tools, spare parts, extra materials, and similar items, and deliver to location designated by

Architect. Label with manufacturer's name and model number where applicable.

a. Schedule of Maintenance Material Items: Prepare and submit schedule of maintenance material submittal items, including name and quantity of each item and name and number of related Specification Section. Obtain Architect's signature for receipt of submittals.

5. Submit test/adjust/balance records.
6. Submit changeover information related to Owner's occupancy, use, operation, and maintenance.

C. Procedures Prior to Substantial Completion: Complete the following a minimum of 10 days prior to requesting inspection for determining date of Substantial Completion. List items below that are incomplete at time of request.

1. Advise Owner of pending insurance changeover requirements.
2. Make final changeover of permanent locks and deliver keys to Owner. Advise Owner's personnel of changeover in security provisions.
3. Complete startup and testing of systems and equipment.
4. Perform preventive maintenance on equipment used prior to Substantial Completion.
5. Instruct Owner's personnel in operation, adjustment, and maintenance of products, equipment, and systems.
6. Advise Owner of changeover in heat and other utilities.
7. Participate with Owner in conducting inspection and walkthrough with local emergency responders.
8. Terminate and remove temporary facilities from Project site, along with mockups, construction tools, and similar elements.
9. Complete final cleaning requirements, including touchup painting.
10. Touch up and otherwise repair and restore marred exposed finishes to eliminate visual defects.

D. Punch List: Submit a written request for inspection to determine Substantial Completion a minimum of 10 days prior to date the work will be completed and ready for final inspection and tests. On receipt of request, Architect will either proceed with inspection or notify Contractor of unfulfilled requirements. Architect will prepare the Certificate of Substantial Completion after inspection or will notify Contractor of items, either on Contractor's list or additional items identified by Architect, that must be completed or corrected before certificate will be issued.

1. Reinspection: Request reinspection when the Work identified in previous inspections as incomplete is completed or corrected.
2. Results of completed inspection will form the basis of requirements for final completion.

1.7 FINAL COMPLETION PROCEDURES

A. Submittals Prior to Final Completion: Before requesting final inspection for determining final completion, complete the following:

1. Submit a final Application for Payment according to Section 012900 - Payment Procedures.
2. Contractor shall submit all prevailing wage affidavits for the history of the project.
3. Contractor shall submit to Owner a set of record drawings not all changes from design that were incorporated during construction.
4. Contractor shall submit to Owner lien releases for general contractor and all sub-contractors.
5. Before final payment can be released, Washington State Labor and Industries, Washington Department of Revenue and Washington State Employment Security, must have released Contractor from its respective responsibilities.
6. Certified List of Incomplete Items: Submit certified copy of Architect's Substantial Completion inspection list of items to be completed or corrected (punch list), endorsed and

dated by Architect. Certified copy of the list shall state that each item has been completed or otherwise resolved for acceptance.

7. Certificate of Insurance: Submit evidence of final, continuing insurance coverage complying with insurance requirements.
8. Submit pest-control final inspection report.

B. Punch List: Submit a written request for final inspection to determine acceptance a minimum of 10 days prior to date the work will be completed and ready for final inspection and tests. On receipt of request, Architect will either proceed with inspection or notify Contractor of unfulfilled requirements. Architect will prepare a final Certificate for Payment after inspection or will notify Contractor of construction that must be completed or corrected before certificate will be issued.
   1. Follow-up Punch List: Request reinspection when the Work identified in previous inspections as incomplete is completed or corrected.

1.8 LIST OF INCOMPLETE ITEMS (PUNCH LIST)

A. Organization of List: Include name and identification of each space and area affected by construction operations for incomplete items and items needing correction including, if necessary, areas disturbed by Contractor that are outside the limits of construction. Use CSI Form 14.1A.
   1. Organize list of spaces in sequential order.
   2. Organize items applying to each space by major element, including categories for ceiling, individual walls, floors, equipment, and building systems.
   3. Include the following information at the top of each page:
      a. Project name.
      b. Name of Architect.
      c. Name of Contractor.
      d. Page number.
   4. Submit list of incomplete items in the following format:
      a. MS Excel electronic file. Architect will return annotated file.
      b. PDF electronic file. Architect will return annotated file.
      c. Three paper copies. Architect will return two copies.

1.9 SUBMITTAL OF PROJECT WARRANTIES

A. Time of Submittal: Submit written warranties on request of Architect for designated portions of the Work where commencement of warranties other than date of Substantial Completion is indicated, or when delay in submittal of warranties might limit Owner's rights under warranty.

B. Partial Occupancy: Submit properly executed warranties within 15 days of completion of designated portions of the Work that are completed and occupied or used by Owner during construction period by separate agreement with Contractor.

C. Organize warranty documents into an orderly sequence based on the table of contents of Project Manual.
   1. Bind warranties and bonds in heavy-duty, three-ring, vinyl-covered, loose-leaf binders, thickness as necessary to accommodate contents, and sized to receive 8-1/2-by-11-inch paper.
   2. Provide heavy paper dividers with plastic-covered tabs for each separate warranty. Mark tab to identify the product or installation. Provide a typed description of the product or installation, including the name of the product and the name, address, and telephone number of Installer.
   3. Identify each binder on the front and spine with the typed or printed title "WARRANTIES," Project name, and name of Contractor.
   4. Warranty Electronic File: Scan warranties and bonds and assemble complete warranty and bond submittal package into a single indexed electronic PDF file with links enabling navigation to each item. Provide bookmarked table of contents at beginning of document.

D. Provide additional copies of each warranty to include in operation and maintenance manuals.

PART 2 PRODUCTS

2.1 MATERIALS

A. Cleaning Agents: Use cleaning materials and agents recommended by manufacturer or fabricator of the surface to be cleaned. Do not use cleaning agents that are potentially hazardous to health or property or that might damage finished surfaces.

1. Use cleaning products that comply with Green Seal's GS-37, or if GS-37 is not applicable, use products that comply with the California Code of Regulations maximum allowable VOC levels.

PART 3 EXECUTION

3.1 FINAL CLEANING

A. General: Perform final cleaning. Conduct cleaning and waste-removal operations to comply with local laws and ordinances and Federal and local environmental and antipollution regulations.

B. Cleaning: Employ experienced workers or professional cleaners for final cleaning. Clean each surface or unit to condition expected in an average commercial building cleaning and maintenance program. Comply with manufacturer's written instructions.

1. Complete the following cleaning operations before requesting inspection for certification of Substantial Completion for entire Project or for a designated portion of Project:

a. Clean Project site, yard, and grounds, in areas disturbed by construction activities, including landscape development areas, of rubbish, waste material, litter, and other foreign substances.

b. Sweep paved areas broom clean. Remove petrochemical spills, stains, and other foreign deposits.

c. Rake grounds that are neither planted nor paved to a smooth, even-textured surface.

d. Remove tools, construction equipment, machinery, and surplus material from Project site.

e. Remove snow and ice to provide safe access to building.

f. Clean exposed exterior and interior hard-surfaced finishes to a dirt-free condition, free of stains, films, and similar foreign substances. Avoid disturbing natural weathering of exterior surfaces. Restore reflective surfaces to their original condition.

g. Remove debris and surface dust from limited access spaces, including roofs, plenums, shafts, trenches, equipment vaults, manholes, attics, and similar spaces.

h. Sweep concrete floors broom clean in unoccupied spaces.

i. Vacuum carpet and similar soft surfaces, removing debris and excess nap; clean according to manufacturer's recommendations if visible soil or stains remain.

j. Clean transparent materials, including mirrors and glass in doors and windows. Remove glazing compounds and other noticeable, vision-obscuring materials. Polish mirrors and glass, taking care not to scratch surfaces.

k. Remove labels that are not permanent.

l. Wipe surfaces of mechanical and electrical equipment and similar equipment. Remove excess lubrication, paint and mortar droppings, and other foreign substances.

m. Clean plumbing fixtures to a sanitary condition, free of stains, including stains resulting from water exposure.

n. Replace disposable air filters and clean permanent air filters. Clean exposed surfaces of diffusers, registers, and grills.

o. Clean ducts, blowers, and coils if units were operated without filters during construction or that display contamination with particulate matter on inspection.

1) Clean HVAC system in compliance with NADCA Standard 1992-01. Provide written report on completion of cleaning.

p. Clean light fixtures, lamps, globes, and reflectors to function with full efficiency.

q. Leave Project clean and ready for occupancy.

C. Pest Control: Comply with pest control requirements in Section 015000 - Temporary Facilities and Controls. Prepare written report.

D. Construction Waste Disposal: Comply with waste disposal requirements in Section 015000 - Temporary Facilities and Controls. .

3.2 REPAIR OF THE WORK

A. Complete repair and restoration operations before requesting inspection for determination of Substantial Completion.

B. Repair or remove and replace defective construction. Repairing includes replacing defective parts, refinishing damaged surfaces, touching up with matching materials, and properly adjusting operating equipment. Where damaged or worn items cannot be repaired or restored, provide replacements. Remove and replace operating components that cannot be repaired. Restore damaged construction and permanent facilities used during construction to specified condition.

1. Remove and replace chipped, scratched, and broken glass, reflective surfaces, and other damaged transparent materials.
2. Touch up and otherwise repair and restore marred or exposed finishes and surfaces. Replace finishes and surfaces that already show evidence of repair or restoration.
   a. Do not paint over "UL" and other required labels and identification, including mechanical and electrical nameplates. Remove paint applied to required labels and identification.
3. Replace parts subject to operating conditions during construction that may impede operation or reduce longevity.
4. Replace burned-out bulbs, bulbs noticeably dimmed by hours of use, and defective and noisy starters in fluorescent and mercury vapor fixtures to comply with requirements for new fixtures.

END OF SECTION

SECTION 017823 - OPERATION AND MAINTENANCE DATA

PART 1 GENERAL

1.1 RELATED DOCUMENTS

A. Drawings and general provisions of the Contract, including General and Supplementary Conditions and other Division 01 Specification Sections, apply to this Section.

1.2 SUMMARY

A. Section includes administrative and procedural requirements for preparing operation and maintenance manuals, including the following:
   1. Operation and maintenance documentation directory.
   2. Emergency manuals.
   3. Operation manuals for systems, subsystems, and equipment.
   4. Product maintenance manuals.
   5. Systems and equipment maintenance manuals.

B. Related Requirements:
   1. Section 013300 - Submittal Procedures for submitting copies of submittals for operation and maintenance manuals.

1.3 DEFINITIONS

A. System: An organized collection of parts, equipment, or subsystems united by regular interaction.

B. Subsystem: A portion of a system with characteristics similar to a system.

1.4 CLOSEOUT SUBMITTALS

A. Manual Content: Operations and maintenance manual content is specified in individual Specification Sections to be reviewed at the time of Section submittals. Submit reviewed manual content formatted and organized as required by this Section.
   1. Owner will comment on whether content of operations and maintenance submittals are acceptable.
   2. Where applicable, clarify and update reviewed manual content to correspond to revisions and field conditions.

B. Format: Submit operations and maintenance manuals in the following format:
   1. PDF electronic file. Assemble each manual into a composite electronically indexed file. Submit on digital media acceptable to Owner.
      a. Name each indexed document file in composite electronic index with applicable item name. Include a complete electronically linked operation and maintenance directory.
      b. Enable inserted reviewer comments on draft submittals.
   2. Two paper copies to Owner. Include a complete operation and maintenance directory. Enclose title pages and directories in clear plastic sleeves.

C. Initial Manual Submittal: Submit draft copy of each manual at least 30 days before commencing demonstration and training. Owner will comment on whether general scope and content of manual are acceptable.

D. Final Manual Submittal: Submit each manual in final form prior to requesting inspection for Substantial Completion and at least 15 days before commencing demonstration and training. Architect and Commissioning Authority will return copy with comments.
   1. Correct or revise each manual to comply with comments. Submit copies of each corrected manual within 15 days of receipt of comments and prior to commencing demonstration and training.

PART 2 PRODUCTS

2.1 OPERATION AND MAINTENANCE DOCUMENTATION DIRECTORY

A. Directory: Prepare a single, comprehensive directory of emergency, operation, and maintenance data and materials, listing items and their location to facilitate ready access to

desired information. Include a section in the directory for each of the following:
1. List of documents.
2. List of systems.
3. List of equipment.
4. Table of contents.

B. List of Systems and Subsystems: List systems alphabetically. Include references to operation and maintenance manuals that contain information about each system.
C. List of Equipment: List equipment for each system, organized alphabetically by system. For pieces of equipment not part of system, list alphabetically in separate list.
D. Tables of Contents: Include a table of contents for each emergency, operation, and maintenance manual.
E. Identification: In the documentation directory and in each operation and maintenance manual, identify each system, subsystem, and piece of equipment with same designation used in the Contract Documents. If no designation exists, assign a designation according to ASHRAE Guideline 4, "Preparation of Operating and Maintenance Documentation for Building Systems."

2.2 REQUIREMENTS FOR OPERATION, AND MAINTENANCE MANUALS

A. Organization: Unless otherwise indicated, organize each manual into a separate section for each system and subsystem, and a separate section for each piece of equipment not part of a system. Each manual shall contain the following materials, in the order listed:
1. Title page.
2. Table of contents.
3. Manual contents.

B. Title Page: Include the following information:
1. Subject matter included in manual.
2. Name and address of Project.
3. Name and address of Owner.
4. Date of submittal.
5. Name and contact information for Contractor.
6. Name and contact information for Construction Manager.
7. Name and contact information for Architect.
8. Name and contact information for Commissioning Authority.
9. Names and contact information for major consultants to the Architect that designed the systems contained in the manuals.
10. Cross-reference to related systems in other operation and maintenance manuals.

C. Table of Contents: List each product included in manual, identified by product name, indexed to the content of the volume, and cross-referenced to Specification Section number in Project Manual.
1. If operation or maintenance documentation requires more than one volume to accommodate data, include comprehensive table of contents for all volumes in each volume of the set.

D. Manual Contents: Organize into sets of manageable size. Arrange contents alphabetically by system, subsystem, and equipment. If possible, assemble instructions for subsystems, equipment, and components of one system into a single binder.
E. Manuals, Electronic Files: Submit manuals in the form of a multiple file composite electronic PDF file for each manual type required.
1. Electronic Files: Use electronic files prepared by manufacturer where available. Where scanning of paper documents is required, configure scanned file for minimum readable file size.
2. File Names and Bookmarks: Enable bookmarking of individual documents based on file names. Name document files to correspond to system, subsystem, and equipment names

used in manual directory and table of contents. Group documents for each system and subsystem into individual composite bookmarked files, then create composite manual, so that resulting bookmarks reflect the system, subsystem, and equipment names in a readily navigated file tree. Configure electronic manual to display bookmark panel on opening file.

2.3 OPERATION MANUALS

A. Content: In addition to requirements in this Section, include operation data required in individual Specification Sections and the following information:
   1. System, subsystem, and equipment descriptions. Use designations for systems and equipment indicated on Contract Documents.
   2. Performance and design criteria if Contractor has delegated design responsibility.
   3. Operating standards.
   4. Operating procedures.
   5. Operating logs.
   6. Wiring diagrams.
   7. Control diagrams.
   8. Piped system diagrams.
   9. Precautions against improper use.
   10. License requirements including inspection and renewal dates.

B. Descriptions: Include the following:
   1. Product name and model number. Use designations for products indicated on Contract Documents.
   2. Manufacturer's name.
   3. Equipment identification with serial number of each component.
   4. Equipment function.
   5. Operating characteristics.
   6. Limiting conditions.
   7. Performance curves.
   8. Engineering data and tests.
   9. Complete nomenclature and number of replacement parts.

C. Operating Procedures: Include the following, as applicable:
   1. Startup procedures.
   2. Equipment or system break-in procedures.
   3. Routine and normal operating instructions.
   4. Regulation and control procedures.
   5. Instructions on stopping.
   6. Normal shutdown instructions.
   7. Seasonal and weekend operating instructions.
   8. Required sequences for electric or electronic systems.
   9. Special operating instructions and procedures.
   10. Training procedures.

D. Systems and Equipment Controls: Describe the sequence of operation, and diagram controls as installed.

E. Piped Systems: Diagram piping as installed, and identify color-coding where required for identification.

2.4 PRODUCT MAINTENANCE MANUALS

A. Content: Organize manual into a separate section for each product, material, and finish. Include source information, product information, maintenance procedures, repair materials and sources, and warranties and bonds, as described below.

B. Source Information: List each product included in manual, identified by product name and arranged to match manual's table of contents. For each product, list name, address, and

telephone number of Installer or supplier and maintenance service agent, and cross-reference Specification Section number and title in Project Manual and drawing or schedule designation or identifier where applicable.

C. Product Information: Include the following, as applicable:
   1. Product name and model number.
   2. Manufacturer's name.
   3. Color, pattern, and texture.
   4. Material and chemical composition.
   5. Reordering information for specially manufactured products.

D. Maintenance Procedures: Include manufacturer's written recommendations and the following:
   1. Inspection procedures.
   2. Types of cleaning agents to be used and methods of cleaning.
   3. List of cleaning agents and methods of cleaning detrimental to product.
   4. Schedule for routine cleaning and maintenance.
   5. Repair instructions.

E. Repair Materials and Sources: Include lists of materials and local sources of materials and related services.

F. Warranties and Bonds: Include copies of warranties and bonds and lists of circumstances and conditions that would affect validity of warranties or bonds.
   1. Include procedures to follow and required notifications for warranty claims.

2.5 SYSTEMS AND EQUIPMENT MAINTENANCE MANUALS

A. Content: For each system, subsystem, and piece of equipment not part of a system, include source information, manufacturers' maintenance documentation, maintenance procedures, maintenance and service schedules, spare parts list and source information, maintenance service contracts, and warranty and bond information, as described below.

B. Source Information: List each system, subsystem, and piece of equipment included in manual, identified by product name and arranged to match manual's table of contents. For each product, list name, address, and telephone number of Installer or supplier and maintenance service agent, and cross-reference Specification Section number and title in Project Manual and drawing or schedule designation or identifier where applicable.

C. Manufacturers' Maintenance Documentation: Manufacturers' maintenance documentation including the following information for each component part or piece of equipment:
   1. Standard maintenance instructions and bulletins.
   2. Drawings, diagrams, and instructions required for maintenance, including disassembly and component removal, replacement, and assembly.
   3. Identification and nomenclature of parts and components.
   4. List of items recommended to be stocked as spare parts.

D. Maintenance Procedures: Include the following information and items that detail essential maintenance procedures:
   1. Test and inspection instructions.
   2. Troubleshooting guide.
   3. Precautions against improper maintenance.
   4. Disassembly; component removal, repair, and replacement; and reassembly instructions.
   5. Aligning, adjusting, and checking instructions.
   6. Demonstration and training video recording, if available.

E. Maintenance and Service Schedules: Include service and lubrication requirements, list of required lubricants for equipment, and separate schedules for preventive and routine maintenance and service with standard time allotment.
   1. Scheduled Maintenance and Service: Tabulate actions for daily, weekly, monthly, quarterly, semiannual, and annual frequencies.

2. Maintenance and Service Record: Include manufacturers' forms for recording maintenance.

F. Spare Parts List and Source Information: Include lists of replacement and repair parts, with parts identified and cross-referenced to manufacturers' maintenance documentation and local sources of maintenance materials and related services.

G. Maintenance Service Contracts: Include copies of maintenance agreements with name and telephone number of service agent.

H. Warranties and Bonds: Include copies of warranties and bonds and lists of circumstances and conditions that would affect validity of warranties or bonds.

1. Include procedures to follow and required notifications for warranty claims.

PART 3 EXECUTION

3.1 MANUAL PREPARATION

A. Operation and Maintenance Documentation Directory: Prepare a separate manual that provides an organized reference to emergency, operation, and maintenance manuals.

B. Emergency Manual: Assemble a complete set of emergency information indicating procedures for use by emergency personnel and by Owner's operating personnel for types of emergencies indicated.

C. Product Maintenance Manual: Assemble a complete set of maintenance data indicating care and maintenance of each product, material, and finish incorporated into the Work.

D. Operation and Maintenance Manuals: Assemble a complete set of operation and maintenance data indicating operation and maintenance of each system, subsystem, and piece of equipment not part of a system.

1. Engage a factory-authorized service representative to assemble and prepare information for each system, subsystem, and piece of equipment not part of a system.
2. Prepare a separate manual for each system and subsystem, in the form of an instructional manual for use by Owner's operating personnel.

E. Manufacturers' Data: Where manuals contain manufacturers' standard printed data, include only sheets pertinent to product or component installed. Mark each sheet to identify each product or component incorporated into the Work. If data include more than one item in a tabular format, identify each item using appropriate references from the Contract Documents. Identify data applicable to the Work and delete references to information not applicable.

1. Prepare supplementary text if manufacturers' standard printed data are not available and where the information is necessary for proper operation and maintenance of equipment or systems.

F. Drawings: Prepare drawings supplementing manufacturers' printed data to illustrate the relationship of component parts of equipment and systems and to illustrate control sequence and flow diagrams. Coordinate these drawings with information contained in record Drawings to ensure correct illustration of completed installation.

1. Do not use original project record documents as part of operation and maintenance manuals.
2. Comply with requirements of newly prepared record Drawings in Section 017839 - Project Record Documents.

G. Comply with Section 017700 - Closeout Procedures for schedule for submitting operation and maintenance documentation.

END OF SECTION

SECTION 017839 - PROJECT RECORD DOCUMENTS

PART 1 - GENERAL

1.1 RELATED DOCUMENTS

A. Drawings and general provisions of the Contract, including General and Supplementary Conditions and other Division 01 Specification Sections, apply to this Section.

1.2 SUMMARY

A. Section includes administrative and procedural requirements for Project Record Documents, including the following:
   1. Record Drawings.
   2. Record Specifications.
   3. Record Product Data.
   4. Miscellaneous record submittals.

B. Related Requirements:
   1. Section 011200 "Multiple Contract Summary" for coordinating Project Record Documents covering the Work of multiple contracts.
   2. Section 017300 "Execution" for final property survey.
   3. Section 017700 "Closeout Procedures" for general closeout procedures.
   4. Section 017823 "Operation and Maintenance Data" for operation and maintenance manual requirements.

1.3 CLOSEOUT SUBMITTALS

A. Record Drawings: Comply with the following:
   1. Number of Copies: Submit PDF electronic files of scanned record prints and one set of file prints.

B. Record Specifications: Submit annotated PDF electronic files of Project's Specifications, including addenda and Contract modifications.

C. Record Product Data: Submit annotated PDF electronic files and directories of each submittal.

1.4 RECORD DRAWINGS

A. Record Prints: Maintain one set of marked-up paper copies of the Contract Drawings and Shop Drawings, incorporating new and revised drawings as modifications are issued.
   1. Preparation: Mark record prints to show the actual installation, where installation varies from that shown originally. Require individual or entity who obtained record data, whether individual or entity is Installer, subcontractor, or similar entity, to provide information for preparation of corresponding marked-up record prints.
      a. Give particular attention to information on concealed elements that would be difficult to identify or measure and record later.
      b. Accurately record information in an acceptable drawing technique.
      c. Record data as soon as possible after obtaining it.
      d. Record and check the markup before enclosing concealed installations.
      e. Cross-reference record prints to corresponding photographic documentation.
   2. Content: Types of items requiring marking include, but are not limited to, the following:
      a. Dimensional changes to Drawings.
      b. Revisions to details shown on Drawings.
      c. Depths of foundations.
      d. Locations and depths of underground utilities.
      e. Revisions to routing of piping and conduits.
      f. Revisions to electrical circuitry.
      g. Actual equipment locations.
      h. Duct size and routing.
      i. Locations of concealed internal utilities.
      j. Changes made by Change Order or Change Directive.
      k. Details not on the original Contract Drawings.
      l. Field records for variable and concealed conditions.

m. Record information on the Work that is shown only schematically.

3. Mark the Contract Drawings and Shop Drawings completely and accurately. Use personnel proficient at recording graphic information in production of marked-up record prints.
4. Mark record prints with erasable, red-colored pencil. Use other colors to distinguish between changes for different categories of the Work at same location.
5. Mark important additional information that was either shown schematically or omitted from original Drawings.
6. Note Construction Change Directive numbers, alternate numbers, Change Order numbers, and similar identification, where applicable.

B. Record Digital Data Files: Immediately before inspection for Certificate of Substantial Completion, review marked-up record prints with Architect. When authorized, prepare a full set of corrected digital data files of the Contract Drawings, as follows:
1. Formats:
a. Annotated PDF electronic file with comment function enabled.
b. AutoDesk 2018 compatible DWG for as-built topography data.
2. Incorporate changes and additional information previously marked on record prints. Delete, redraw, and add details and notations where applicable.
3. Refer instances of uncertainty to Architect for resolution.
4. Architect will furnish Contractor with one set of digital data files of the Contract Drawings for use in recording information.
a. See Section 013100 "Project Management and Coordination" for requirements related to use of Architect's digital data files.
b. Architect will provide data file layer information. Record markups in separate layers.

C. Format: Identify and date each Record Drawing; include the designation "PROJECT RECORD DRAWING" in a prominent location.
1. Record Prints: Organize record prints into manageable sets. Bind each set with durable paper cover sheets. Include identification on cover sheets.
2. Format: Annotated PDF electronic file with comment function enabled.
3. Record Digital Data Files: Organize digital data information into separate electronic files that correspond to each sheet of the Contract Drawings. Name each file with the sheet identification. Include identification in each digital data file.
4. Identification: As follows:
a. Project name.
b. Date.
c. Designation "PROJECT RECORD DRAWINGS."
d. Name of Architect.
e. Name of Contractor.

1.5 RECORD SPECIFICATIONS

A. Preparation: Mark Specifications to indicate the actual product installation, where installation varies from that indicated in Specifications, addenda, and Contract modifications.
1. Give particular attention to information on concealed products and installations that cannot be readily identified and recorded later.
2. For each principal product, indicate whether Record Product Data has been submitted in operation and maintenance manuals instead of submitted as Record Product Data.
3. Note related Change Orders and Record Drawings where applicable.

B. Format: Submit record specifications as annotated PDF electronic file.

1.6 RECORD PRODUCT DATA

A. Recording: Maintain one copy of each submittal during the construction period for Project Record Document purposes. Post changes and revisions to Project Record Documents as they occur; do not wait until the end of Project.

B. Preparation: Mark Product Data to indicate the actual product installation where installation varies substantially from that indicated in Product Data submittal.
1. Give particular attention to information on concealed products and installations that cannot be readily identified and recorded later.

2. Include significant changes in the product delivered to the Project site and changes in manufacturer's written instructions for installation.
3. Note related Change Orders and Record Drawings where applicable.

C. Format: Submit Record Product Data as annotated PDF electronic file.
1. Include Record Product Data directory organized by Specification Section number and title, electronically linked to each item of Record Product Data.

1.7 MISCELLANEOUS RECORD SUBMITTALS

A. Assemble miscellaneous records required by other Specification Sections for miscellaneous record keeping and submittal in connection with actual performance of the Work. Bind or file miscellaneous records and identify each, ready for continued use and reference.

B. Format: Submit miscellaneous record submittals as PDF electronic file.
1. Include miscellaneous record submittals directory organized by Specification Section number and title, electronically linked to each item of miscellaneous record submittals.

1.8 MAINTENANCE OF RECORD DOCUMENTS

A. Maintenance of Record Documents: Store Record Documents in the field office apart from the Contract Documents used for construction. Do not use Project Record Documents for construction purposes. Maintain Record Documents in good order and in a clean, dry, legible condition, protected from deterioration and loss. Provide access to Project Record Documents for Architect's reference during normal working hours.

PART 2 - PRODUCTS (Not Used)

PART 3 - EXECUTION

3.1 RECORD DOCUMENT SURVEYING

A. Horizontal Datum: Washington State Plane, North Zone, NAD 83/91

B. Vertical Datum: NAVD 88

C. Extents:
1. Provide elevation shots at an interval that will support clear definition of 1-foot contours.
2. The grid density or longitudinal interval of surveyed points shall not exceed 20 feet.
3. Elevations points shall be taken at all grade breaks, including the tops and toes of all slopes, within the area to be surveyed.
4. Locate all site improvements, such as buildings, curbs, visible utilities, fencing, and landscape areas, within 25 feet of the area being surveyed.

END OF SECTION

SECTION 017900 - DEMONSTRATION AND TRAINING

PART 1 GENERAL

1.1 RELATED DOCUMENTS

A. Drawings and general provisions of the Contract, including General and Supplementary Conditions and other Division 01 Specification Sections, apply to this Section.

1.2 SUMMARY

A. Section includes administrative and procedural requirements for instructing Owner's personnel, including the following:
   1. Demonstration of operation of systems, subsystems, and equipment.
   2. Training in operation and maintenance of systems, subsystems, and equipment.
   3. Demonstration and training video recordings.

1.3 INFORMATIONAL SUBMITTALS

A. Instruction Program: Submit outline of instructional program for demonstration and training, including a list of training modules and a schedule of proposed dates, times, length of instruction time, and instructors' names for each training module. Include learning objective and outline for each training module.
   1. Indicate proposed training modules using manufacturer-produced demonstration and training video recordings for systems, equipment, and products in lieu of video recording of live instructional module.

B. Qualification Data: For facilitator.

C. Attendance Record: For each training module, submit list of participants and length of instruction time.

D. Evaluations: For each participant and for each training module, submit results and documentation of performance-based test.

1.4 QUALITY ASSURANCE

A. Facilitator Qualifications: A firm or individual experienced in training or educating maintenance personnel in a training program similar in content and extent to that indicated for this Project, and whose work has resulted in training or education with a record of successful learning performance.

B. Instructor Qualifications: A factory-authorized service representative, complying with requirements in Section 014000 - Quality Requirements, experienced in operation and maintenance procedures and training.

C. Videographer Qualifications: A professional videographer who is experienced photographing demonstration and training events similar to those required.

D. Preinstruction Conference: Conduct conference at Project site to comply with requirements in Section 013100 - Project Management and Coordination. Review methods and procedures related to demonstration and training including, but not limited to, the following:
   1. Inspect and discuss locations and other facilities required for instruction.
   2. Review and finalize instruction schedule and verify availability of educational materials, instructors' personnel, audiovisual equipment, and facilities needed to avoid delays.
   3. Review required content of instruction.
   4. For instruction that must occur outside, review weather and forecasted weather conditions and procedures to follow if conditions are unfavorable.

1.5 COORDINATION

A. Coordinate instruction schedule with Owner's operations. Adjust schedule as required to minimize disrupting Owner's operations and to ensure availability of Owner's personnel.

B. Coordinate instructors, including providing notification of dates, times, length of instruction time, and course content.

C. Coordinate content of training modules with content of approved emergency, operation, and maintenance manuals. Do not submit instruction program until operation and maintenance data has been reviewed and approved by Architect.

PART 2 PRODUCTS

2.1 INSTRUCTION PROGRAM

A. Program Structure: Develop an instruction program that includes individual training modules for each system and for equipment not part of a system, as required by individual Specification Sections.

B. Training Modules: Develop a learning objective and teaching outline for each module. Include a description of specific skills and knowledge that participant is expected to master. For each module, include instruction for the following as applicable to the system, equipment, or component:

1. Basis of System Design, Operational Requirements, and Criteria: Include the following:
   a. System, subsystem, and equipment descriptions.
   b. Performance and design criteria if Contractor has delegated design responsibility.
   c. Operating standards.
   d. Regulatory requirements.
   e. Equipment function.
   f. Operating characteristics.
   g. Limiting conditions.
   h. Performance curves.
2. Documentation: Review the following items in detail:
   a. Emergency manuals.
   b. Operations manuals.
   c. Maintenance manuals.
   d. Project record documents.
   e. Identification systems.
   f. Warranties and bonds.
   g. Maintenance service agreements and similar continuing commitments.
3. Emergencies: Include the following, as applicable:
   a. Instructions on meaning of warnings, trouble indications, and error messages.
   b. Instructions on stopping.
   c. Shutdown instructions for each type of emergency.
   d. Operating instructions for conditions outside of normal operating limits.
   e. Sequences for electric or electronic systems.
   f. Special operating instructions and procedures.
4. Operations: Include the following, as applicable:
   a. Startup procedures.
   b. Equipment or system break-in procedures.
   c. Routine and normal operating instructions.
   d. Regulation and control procedures.
   e. Control sequences.
   f. Safety procedures.
   g. Instructions on stopping.
   h. Normal shutdown instructions.
   i. Operating procedures for emergencies.
   j. Operating procedures for system, subsystem, or equipment failure.
   k. Seasonal and weekend operating instructions.
   l. Required sequences for electric or electronic systems.
   m. Special operating instructions and procedures.

5. Adjustments: Include the following:
    a. Alignments.
    b. Checking adjustments.
    c. Noise and vibration adjustments.
    d. Economy and efficiency adjustments.
6. Troubleshooting: Include the following:
    a. Diagnostic instructions.
    b. Test and inspection procedures.
7. Maintenance: Include the following:
    a. Inspection procedures.
    b. Types of cleaning agents to be used and methods of cleaning.
    c. List of cleaning agents and methods of cleaning detrimental to product.
    d. Procedures for routine cleaning
    e. Procedures for preventive maintenance.
    f. Procedures for routine maintenance.
    g. Instruction on use of special tools.
8. Repairs: Include the following:
    a. Diagnosis instructions.
    b. Repair instructions.
    c. Disassembly; component removal, repair, and replacement; and reassembly instructions.
    d. Instructions for identifying parts and components.
    e. Review of spare parts needed for operation and maintenance.

PART 3 EXECUTION

3.1 PREPARATION

A. Assemble educational materials necessary for instruction, including documentation and training module. Assemble training modules into a training manual organized in coordination with requirements in Section 017823 - Operation and Maintenance Data.

B. Set up instructional equipment at instruction location.

3.2 INSTRUCTION

A. Facilitator: Engage a qualified facilitator to prepare instruction program and training modules, to coordinate instructors, and to coordinate between Contractor and Owner for number of participants, instruction times, and location.

B. Engage qualified instructors to instruct Owner's personnel to adjust, operate, and maintain systems, subsystems, and equipment not part of a system.
    1. Architect will furnish an instructor to describe basis of system design, operational requirements, criteria, and regulatory requirements.
    2. Owner will furnish an instructor to describe Owner's operational philosophy.
    3. Owner will furnish Contractor with names and positions of participants.

C. Scheduling: Provide instruction at mutually agreed on times. For equipment that requires seasonal operation, provide similar instruction at start of each season.
    1. Schedule training with Owner, through Architect, with at least seven days' advance notice.

D. Training Location and Reference Material: Conduct training on-site in the completed and fully operational facility using the actual equipment in-place. Conduct training using final operation and maintenance data submittals.

E. Cleanup: Collect used and leftover educational materials and give to Owner. Remove instructional equipment. Restore systems and equipment to condition existing before initial training use.

END OF SECTION

SECTION 024119 - SELECTIVE DEMOLITION

PART 1 GENERAL

1.1 SECTION INCLUDES
- A. Selective demolition of building elements.
- B. Salvage and removal of building elements.
- C. Utility Services and Mechanical/Electrical System.

1.2 REFERENCE STANDARDS
- A. 29 CFR 1910 - Occupational Safety and Health Standards Current Edition.
- B. 29 CFR 1926 - Safety and Health Regulations for Construction Current Edition.
- C. NFPA 241 - Standard for Safeguarding Construction, Alteration, and Demolition Operations 2022, with Errata (2021).

1.3 ADMINISTRATIVE REQUIREMENTS
- A. Preinstallation Meeting: Convene one week before the start of work for this section in accordance with Section 013100 - Project Management and Coordination.
  1. Review preparation and installation procedures and coordinating and scheduling required with related work.
  2. Review Owner salvage requirements and conduct a walk-through with Owner present.

1.4 SUBMITTALS
- A. Qualification Data: For demolition contractor listing projects and references.
- B. Demolition Plan: Submit demolition plan as specified by OSHA and local authorities.
  1. Indicate extent of demolition, removal sequence, bracing and shoring, and location and construction of partitions, barricades and fences.
  2. Include procedures and coordination with other work in progress, a disconnection schedule of utility services, and a detailed description of methods and equipment to be used for each operation and of the sequence of operations.
  3. Identify demolition firm and submit qualifications.
  4. Include a summary of safety procedures.
- C. Engineering Survey.
- D. Existing Condition Survey.
- E. Shop Drawings: extents of demolition, locations of existing utilities, and locations of utility capping. Indicate structural members and elements that will be demolished. .
- F. Closeout Submittals: Accurately record actual locations of capped and active utilities and subsurface construction.

1.5 QUALITY ASSURANCE
- A. Demolition Contractor Qualifications: Company specializing in selective demolition comparable in scope, environmental and historical sensitivity of work specified in this section with minimum 5 years' experience.

PART 2 PRODUCTS

2.1 DESCRIPTION
- A. Demolition of existing elements to accommodate tie-in of new work to existing conditions.

2.2 PERFORMANCE AND DESIGN CRITERIA
- A. 29 CFR 1910: Occupational Safety and Health Standards.
- B. 29 CFR 1926 - U.S. Occupational Safety and Health Standards; current edition.
- C. NFPA 241 - Standard for Safeguarding Construction, Alteration, and Demolition Operations; 2013.
- D. Notify Architect of discrepancies between existing conditions and Drawings before proceeding with selective demolition.
- E. Storage or sale of removed items or materials on-site is not permitted.

F. Utility Service: Maintain existing utilities indicated to remain in service and protect them against damage during selective demolition operations.
   1. Maintain fire-protection facilities in service during selective demolition operations.
G. Comply with governing EPA notification regulations before beginning selective demolition.
H. Comply with hauling and disposal regulations of authorities having jurisdiction.

2.3 ACCESSORIES

A. All accessory materials required by the manufacturer for a warrantable installation of the installed products in a manner that meets the Performance and Design Criteria.

PART 3 EXECUTION

3.1 EXAMINATION

A. Verify that utilities have been disconnected and capped before start of work.
B. Review record documents provided by Owner and schedule listing salvage and remove for reuse items.
C. Perform a survey of existing conditions by use of measured drawings and preconstruction photographs.

3.2 PREPARATION

A. Provide and maintain shoring, bracing, and structural supports as required to preserve stability and prevent movement, settlement, or collapse of construction and finishes to remain, and to prevent unexpected or uncontrolled movement or collapse of construction being demolished.
B. Provide temporary barricades and other protection required to prevent injury to people and damage to adjacent buildings and facilities to remain.
C. Provide fire watch during hot work while sprinklers are offline.

3.3 SELECTIVE DEMOLITION OF BUILDING ELEMENTS

A. Demolish and remove existing construction only to the extent required by new construction and as indicated. Use methods required to complete the Work within limitations of governing regulations.
B. Neatly cut openings and holes plumb, square, and true to dimensions required. Use cutting methods least likely to damage construction to remain or adjoining construction.
C. Existing Items to Remain: Protect construction indicated to remain against damage and soiling during selective demolition. When permitted by Architect, items may be removed to a suitable, protected storage location during selective demolition and reinstalled in their original locations after selective demolition operations are complete.
D. Locate selective demolition equipment and remove debris and materials so as not to impose excessive loads on supporting walls, floors, or framing.

3.4 SALVAGE AND REMOVAL OF BUILDING ELEMENTS

A. Removed and Salvaged Items:
   1. Clean salvaged items.
   2. Store items in a secure area.
   3. Protect items from damage during storage.
B. Removed and Reinstalled Items:
   1. Clean and repair items to functional condition adequate for intended reuse.
   2. Store items after cleaning.
   3. Reinstall items in locations indicated. Comply with installation requirements for new materials and equipment. Provide connections, supports, and miscellaneous materials necessary to make item functional for use indicated.
C. Do not use cutting torches until work area is cleared of flammable materials. At concealed spaces, such as duct and pipe interiors, verify condition and contents of hidden space before starting flame-cutting operations. Maintain portable fire-suppression devices during flame-cutting operations.
D. Maintain fire watch during and for at least two hours after flame-cutting operations.

E. Dispose of demolished items and materials promptly.

3.5 CLEANING

A. Clean adjacent structures and improvements of dust, dirt, and debris caused by selective demolition. Return adjacent areas to condition existing before selective demolition rations began.

B. Remove demolition waste materials from Project site and dispose of them in an EPA-approved construction and demolition waste landfill acceptable to authorities having jurisdiction.

1. Do not allow demolished materials to accumulate on-site.
2. Remove and transport debris in a manner that will prevent spillage on adjacent surfaces and areas.
3. Remove debris from elevated portions of building by chute, hoist, or other device that will convey debris to grade level in a controlled descent.

C. Dispose of all waste material in accordance with project's Waste Management Plan.

1. See Section 017419 - Construction Waste Management and Disposal for additional requirements.

3.6 PROTECTION

A. Remove temporary barricades and protections where hazards no longer exist.

3.7 UTILITY SERVICES AND MECHANICAL/ELECTRICAL SYSTEMS

A. Existing Services/Systems to be Removed, Relocated, or Abandoned: Locate, identify, disconnect, and seal or cap off utility services and mechanical/electrical systems serving areas to be selectively demolished.

1. Arrange to shut off utilities with utility companies.
2. If services/systems are required to be removed, relocated or abandoned, provide temporary services/systems that bypass area of selective demolition and that maintain continuity of services/systems to other parts of building.
3. Disconnect, demolish, and remove the fire suppression systems, plumbing, and HVAC systems, equipment, and components indicated on Drawings to be removed.
   a. Piping to Be Removed: Remove portion of piping indicated to be removed and cap or plug remaining piping with same or compatible piping material.
   b. Equipment to be Removed: Remove portion of ducts indicated to be removed and plug remaining ducts with same or compatible ductwork material.

END OF SECTION

SECTION 02 82 00 - ASBESTOS ABATEMENT

PART 1 - GENERAL

1.01 RELATED WORK DESCRIBED ELSEWHERE:

A. The provisions and intent of the contract, including the General Conditions, Special Conditions and General Requirements apply to this work as if specified in this Section. Work related to this Section is described in:

1. Section 02 83 00 – Heavy Metals Containing Materials
2. Section 02 84 17 – Universal and other Regulated Waste Activities

1.02 DESCRIPTION OF WORK:

A. The Contractor shall supply all labor, materials, services, insurance, special permits, and equipment necessary to remove and dispose of asbestos-containing materials (ACM) within the project areas in accordance with all applicable federal, state, and local regulations and these specifications. Coordinate with the specifications for related scopes of work.

B. See the Limited Hazardous Building Material Survey – RFM Fire Station 57 Project, Gig Harbor, WA, February 2023, prepared by EHS-International for a summary of the hazardous materials identified and sampled in preparation for this project. No asbestos containing materials were identified in the survey report via sampling, however, assumed asbestos containing materials were identified at the site. Additionally concealed or inaccessible suspect asbestos containing materials may be uncovered during the course of the project which must be assumed to be asbestos-containing until testing proves otherwise. This specification section has been prepared to help guide the handling of any asbestos containing materials impacted during the project.

C. See the abatement design drawings HA001 – HA101, RFM Fire Station 57 Project for the location and approximate quantities of assumed asbestos containing materials (ACM) to be removed.

1.03 GENERAL REQUIREMENTS:

A. The regulated materials abatement work of this project is in preparation of work to be completed by others. Failure to complete the specified tasks identified within the allotted contract time will result in serious damages. Prior to submitting a bid for this work, the Contractor is responsible for review and coordination with the scheduled work and ensures that adequate resources have been identified to complete the proposed work tasks on schedule.

B. Contractor is responsible to notify and provide all necessary notifications to the responsible regulatory agencies for all required work.

C. Contractor is responsible to take appropriate measures ensuring that the project site will be safeguarded from contamination during the asbestos abatement project period.

D. Building materials in the project area that are not clearly identified within the contract documents shall be treated as ACM unless otherwise noted.

E. All work is to be performed in accordance with applicable codes, standards, regulations, and accepted industry practices. This includes compliance with regulatory requirements applicable at the time the work is performed and is not limited to requirements at the time of bid. All work, including work practices, is to be craftsman-like and is subject to inspection by the Owner and/or Owner's representative, and regulatory agency personnel.

F. The work described in this section is a general description and is not intended as a complete listing of the work to be accomplished. The work of this project may be expanded or deleted

above and beyond the specified scope by the Owner to include encapsulation, removal, transportation, and disposal of regulated materials that may be encountered during the project.

G. All required permits and notifications should be kept valid for the duration of the work. This includes any permit and/or notification revisions, such as changes of abatement dates, shift times, work locations, Contractor personnel, etc.

H. All employees involved in asbestos abatement activities shall be the bearer of a current Certified Asbestos Worker card issued by the Washington State Department of Labor and Industries. Cards shall be available for inspection at the jobsite. The Contractor shall also provide, as a minimum, one (1) person certified by L&I as an Asbestos Abatement Supervisor and this person shall be responsible for overall abatement activities. This person shall be immediately available on-site when any project work is performed. If abatement work is performed on multiple shifts, each shift shall have a Certified Asbestos Supervisor.

I. Smoking or open fires will not be permitted within the building enclosure or on the facility's premises.

J. Contractor is responsible for all air sampling to comply with WISHA and other local, state, and federal regulations. Refer to Paragraph 1.7 of this section for requirements for Contractor air monitoring.

K. On-site Observation:

1. The safety and protection of the Contractor's employees, sub-contractor's employees, Owner's employees, consultant, the facility, and the public are the sole responsibility of the Contractor.
2. The Owner and/or Owner's representative or representatives of local, state, or federal agencies may make unannounced visits to the site during the work. The Contractor shall provide two complete sets of clean, protective clothing and respirators with the same protection factor as required in the regulated area available daily for such visitor use. It is the visitor's responsibility to ensure all necessary medical qualification, training, and "fit test" certificates are current prior to using any respirator or protective clothing provided by the Contractor.
3. If the Owner and/or Owner's representative or agency visitor determines that practices are in violation of applicable regulations, or are endangering workers, the public, or the facility, they will immediately notify the Contractor orally that operations must cease until corrective action is taken.
   a. All costs resulting from such stop work order and any necessary corrective actions will be borne solely by the Contractor and will not be a basis for an increase in the contract amount or an extension of time.

1.04 ASBESTOS ABATEMENT DEFINITION:

A. Definitions Relevant to Asbestos Abatement:

1. Abatement: Procedures to control fiber release from asbestos-containing materials. Includes removal, enclosure, repair, demolition, and renovation activities.
2. ACGIH: American Conference of Governmental Industrial Hygienists.
3. Aerosol: A system consisting of particles, solid or liquid, suspended in air.
4. AIHA: American Industrial Hygiene Association, 475 Wolf Ledges Parkway, Akron, OH 44311.
5. Airlock: A system for permitting ingress and egress with minimum air movement between a contaminated area and an uncontaminated area, typically consisting of two curtained doorways separated by a distance of at least 3 feet.

6. Air Monitoring: The process of measuring the fiber content of a known volume of air collected during a specific period. The procedure most utilized in industry for asbestos follows the WISHA reference method outlined in WAC 296 62 07735, Appendix A, and WAC 296 62 07737, Appendix B. For clearance air monitoring, aggressive monitoring techniques are used and shall be conducted in accordance with EPA document #560/5 85 024 (June 1985). Electron microscopy methods may also be utilized for lower detectability as well as specific fiber identification.
7. Air Sampling Firm (ASF): A professional firm providing specialized services by trained and certified or qualified personnel in the field of asbestos abatement and project management, contracted with or employed by the Contractor or tenant to supervise and/or conduct inspection, monitoring, and analysis services.
8. Amended Water: Water to which a surfactant has been added to accomplish more thorough penetration and saturation of the asbestos-containing material.
9. ANSI: American National Standards Institute.
10. Asbestos: The mineral varieties of serpentinite (chrysotile), riebeckite (crocidolite), cummingtonite-grunerite (amosite), anthophyllite, actinolite and tremolite. For purposes of determining respiratory and worker protection, both the asbestiform and non-asbestiform varieties of the above minerals and these minerals that have been chemically treated and/or altered shall be considered as asbestos.
11. Asbestos-Containing Material (ACM): Any material containing more than one percent (1%) asbestos as defined under NESHAPS CFR 40, Part 61, and OSHA 29 CFR Part 1926.1101, or at least one percent (1%) asbestos as defined under Rule No. 63 of the Puget Sound Clean Air Agency.
12. ASTM: American Society for Testing and Materials.
13. Breathing Zone: A hemisphere forward of the shoulders with a radius of approximately 6 to 9 inches.
14. Bridging Encapsulant: The application of a sealant over the surface of asbestos-containing material to prevent the release of asbestos fibers.
15. Certified Industrial Hygienist (CIH): An Industrial hygienist certified in the Comprehensive Practice or Chemical Aspects of Industrial Hygiene by the American Board of Industrial Hygiene.
16. Class I Asbestos Work: Activities involving the removal of thermal system insulation or surfacing ACM/PACM.
17. Clean Room: An uncontaminated area or room, which is a part of the worker decontamination enclosure system with provisions for storage of worker's street clothes and clean protective equipment.
18. Containment: An enclosure system.
19. Contractor: The individual or business with which the Owner contracts with to perform the asbestos abatement.
20. Competent Person: The individual onsite (a representative of the contractor) who can identify existing asbestos, hazards in the workplace and selecting the appropriate control strategy for asbestos exposure, and who has the authority to take prompt corrective measures to eliminate them as specified in WAC 296-62-07728. The competent person shall meet all requirements specified in WAC 296-62-07728. The competent person shall be certified as an asbestos supervisor in compliance with WAC 296-65-030(3) and 296-65-012.
21. Curtained Doorway: A device to allow ingress or egress from one room to another typically constructed by placing two overlapping sheets of plastic over an existing or temporarily framed doorway.

22. Cutting: To penetrate with a sharp-edged instrument and includes sawing, but does not include shearing, slicing, or punching.
23. Differential Pressure System: A containment system utilizing negative air machines in an airtight enclosure.
24. Disposal Bag: 6 mil thick leak-tight plastic bags used for transporting asbestos waste from the work site and to the disposal site. Each shall be labeled in accordance with WAC 296 62 07721 and 40 CFR 61.150 and PSCAA Rule No. 63.
25. Encapsulant: A material which is applied to asbestos-containing material to reduce or control the potential release of asbestos fibers from the material, either by creating a membrane over the surface (bridging encapsulant), or by penetrating the material and binding its components together (penetrating encapsulant).
26. Encapsulation: The application of an encapsulant to asbestos-containing materials in accordance with the manufacturer's specifications.
27. Enclosure: A semi-airtight system used to segregate and isolate an asbestos abatement area, and which is continuously served by a negative pressure ventilation system once abatement activities start.
28. EPA: U.S. Environmental Protection Agency, Region X, 1200 Sixth Avenue, Seattle, WA 98101.
29. Equipment Room: An area or room, which is part of the worker decontamination enclosure system with provisions for storage of contaminated clothing and equipment.
30. Excursion Limit: The maximum personal exposure concentration of asbestos fibers in air for any 30-minute period (1.0 f/cc).
31. Facility: Any institutional, commercial, public, industrial, or residential structure, installation, or building (including any structure, installation, or building containing condominiums or individual dwelling units operated as a residential cooperative but excluding residential dwellings having four or fewer dwelling units); any ship; and any active or inactive waste disposal site. For purposes of this definition, any building, structure, or installation that contains a loft used as a dwelling is not considered a residential structure, installation, or building.
32. Facility Component: Any part of a facility including equipment.
33. Filter: A media component used in respirators or equipment to remove solid or liquid particles from air or water.
34. Fixed Object: A piece of equipment or furniture that cannot be removed from the work area.
35. Friable Asbestos Material: Any material containing more than 1 percent asbestos as determined using the method specified in appendix A, subpart F, 40 CFR part 763 section 1, Polarized Light Microscopy, that, when dry, can be crumbled, pulverized, or reduced to powder by hand pressure. If the asbestos content is less than 10 percent as determined by a method other than point counting by polarized light microscopy (PLM) verify the asbestos content by point counting using PLM.
36. Friable Upon Removal: A non-friable material, which becomes friable when disturbed during removal.
37. Fugitive Source: Any source of emissions not controlled by an air pollution control device.
38. Glovebag Technique: A method for removing small amounts of friable asbestos-containing material from fireproofed beams, HVAC ducts, short piping run, valves, joints, elbows, and other non-planar surfaces in a non-contained (plasticized) work area. The glovebag assembly is a manufactured or fabricated device consisting of a bag (typically constructed of plastic), two inward projecting long sleeve gloves, an internal tool pouch and an attached or pre-printed label. All workers who are permitted to use the glovebag technique must be trained, experienced and skilled in this abatement method.

39. Grinding: To reduce to powder or small fragments and includes mechanical chipping or drilling.
40. HEPA Filter: A high efficiency particulate air filter capable of removing particles greater than 0.3 microns in diameter with 99.97% efficiency using Dispersed Oil Particulate (DOP) testing methodology.
41. HEPA Vacuum: A vacuum system equipped with HEPA filtration.
42. HEPA Machine: Negative air machine equipped with HEPA filtration.
43. HVAC: Heating, Ventilation and Air Conditioning System.
44. Installation: Any building or structure or any group of buildings or structures at a single demolition or renovation site that are under the control of the same owner or operator (or owner or operator under common control).
45. L&I: Washington State Department of Labor and Industries, 805 Plum Street, S.E. (HC 412), Olympia, Washington 98504.
46. Leak-Tight: Solids or liquids cannot escape or spill out. It also means dust tight.
47. Malfunction: Any sudden and/or unavoidable failure of air pollution control equipment or process equipment or of a process to operate in a normal or usual manner so that emissions of asbestos are increased. Failures of equipment shall not be considered malfunctions if they are caused in any way by poor maintenance, careless operation, or any other preventable upset conditions, equipment breakdown, or process failure.
48. Material Decon Unit: A decontamination system, which is utilized for transferring containerized waste from inside to outside of the work area.
49. Movable Object: A piece of equipment or furniture in the work area, which can be removed from the work area.
50. MSDS: Material Safety Data Sheet.
51. Mudded Pipe Insulation Section: A continuous section of pipe insulation less than 12” in length, which may contain one or more plumbing fitting(s) (i.e., elbows, tees, valves, “y’s”, unions, etc.).
52. Negative Air Machine: A specially designed fan mounted in a cabinet that draws air from the contaminated space into pre-filters and a HEPA filter.
53. Negative Pressure Respirator: A respirator in which the air pressure inside the respirator is negative during inhalation in relation to the air pressure outside the respirator.
54. Negative Pressure Enclosure: The negative pressure/local exhaust system, utilizing HEPA filtration capable of maintaining a negative pressure of 0.02 inches of water inside the work area and a minimum of four (4) air exchanges per hour from adjacent areas into the work area and exhausting clean, filtered air outside work area.
55. Negative Pressure: Air pressure lower than surrounding areas, generally caused by exhausting air from within the containment work area. A sufficient volume or air shall be exhausted to create a minimum pressure of -0.02 inches of water within the enclosure with respect to the area outside of the containment work area.
56. NESHAP: The National Emission Standards for Hazardous Air Pollutants (40 CFR Part 61).
57. Non-Friable Asbestos-Containing Material: Any material containing more than 1 percent asbestos as determined using the method specified in appendix A, subpart F, 40 CFR part 763, section 1, Polarized Light Microscopy, that, when dry, cannot be crumbled, pulverized, or reduced to powder by hand pressure.
58. NIOSH: The National Institute for Occupational Safety and Health, Building “J” N.E., Room 3007, Atlanta, GA 30333.
59. PSCAA: Puget Sound Clean Air Agency, 1904 3rd Avenue Ste 105, Seattle, Washington 98101.

60. OSHA: The Occupational Safety and Health Administration, 1111 Third Avenue, #715, Seattle, WA 98101-3212.
61. Outside Air: The air outside building, structure, negative air enclosure, containment or designated regulated area.
62. Owner or Operator of a Demolition or Renovation Activity: Any person, who owns, leases, operates, controls, or supervises the facility being demolished or renovated or any person, who owns, leases, operates, controls, or supervises the demolition or renovation operation or both.
63. PCM: Phase Contrast Microscopy
64. PLM: Polarized Light Microscopy
65. Particulate Asbestos Material: Finely divided particles of asbestos or material containing asbestos.
66. Penetrating Encapsulant (Lock-down): Liquid material applied to asbestos-containing material to control airborne fiber release by penetrating the material and binding its components together.
67. Personal Monitoring: Sampling the asbestos fiber concentrations within the breathing zone of an employee during representative operations as required by applicable regulations.
68. Protection Factor: The ratio of the ambient concentration of an airborne substance to the concentration of the substance outside the respirator to the concentration inside the respirator at the breathing zone of the wearer.
69. Prior Experience: Experience required of the Contractor on asbestos projects of similar nature and scope to ensure the capability of performing asbestos abatement in a satisfactory manner. Similarities shall be in areas related to material composition, project size, abatement methods required, number of employees and the engineering, work practice and personal protection controls required.
70. Regulated Area: An area established by the Contractor to demarcate areas where airborne concentrations of asbestos exceed or can reasonably be expected to exceed the permissible exposure limits. The regulated area may take the form of (a) a temporary enclosure, as required by WAC 296 62 07711, or (b) an area demarcated in any manner that minimizes the number of employees exposed to asbestos.
71. Regulated Asbestos-Containing Material (ACM): (a) Friable asbestos material, (b) Category I Non-friable ACM that has become friable, (c) Category I Non-friable ACM that will be or has been subjected to sanding, grinding, cutting or abrading, or (d) Category II Non-friable ACM that has a high probability of becoming or has become crumbled, pulverized, or reduced to powder by the forces expected to act on the material in the course of demolition or renovation operations regulated by this subpart.
72. Removal: To take off asbestos containing materials from surfaces or components of a facility.
73. Renovation: Altering a facility or one or more facility components in any way, including the stripping or removal of ACM from a facility component. Operations in which load-supporting structural members are wrecked or taken out are demolitions.
74. Respirator: A device designed to protect the wearer from the inhalation of harmful atmospheres.
75. Shower Room: A room between the clean room and the equipment room within the worker decontamination system supplied with hot and cold running water controllable at the tap, adequate soap and suitably arranged for complete showering.
76. Staging Area: Either the holding area or some areas near the waste transfer airlock where containerized asbestos waste has been placed prior to removal from the work area.

77. Structural Member: Any loaded-bearing member of a facility, such as beams and load-bearing walls or any non-load supporting member, such as ceilings and non-load supporting walls.
78. Surfactant: A chemical wetting agent added to water to improve penetration.
79. Time Weighted Average (TWA): The average exposure to a contaminant in air measured during a specific time period, usually a shift, adjusted to eight hours.
80. Visible Emissions: An emission containing particulate asbestos material that is visually detectable without the aid of instruments. This does not include condensed uncombined water vapor.
81. Waste Generator: Any owner or operator of a source covered by Department of Transportation regulations whose act or process produces asbestos-containing waste material. All demolition debris materials, including asbestos-containing materials, except those containing substances classified as hazardous or dangerous by controlling local, state, or federal regulatory agencies, shall upon their demolition became the property of the Contractor.
82. Waste Shipment Record: The shipping document, required to be originated and signed by the waste generator, used to track, and substantiate the disposition of asbestos-containing waste material.
83. Wet Cleaning: The process of eliminating asbestos contamination from building surfaces and objects by using cloths, mops, or other cleaning utensils which have been dampened with water and afterwards thoroughly decontaminated or disposed of as asbestos contaminated waste.
84. Work Area: Designated rooms, spaces, or areas of the project in which asbestos abatement actions are to be undertaken or which may become contaminated because of such abatement actions.
85. Worker Decontamination System: A series of connected rooms, consisting of a clean room, a shower room and an equipment room separated from each other and from the work area by curtained doorways. This system is used for all worker entries and exits from the work area.
86. WSDOT: Washington State Department of Transportation, Transportation Building, KF-01, Olympia, WA 98504.

1.05 REFERENCE STANDARDS:

A. General Requirements:
   1. All work under this contract shall be done in strict accordance with all applicable regulations, standards and codes governing asbestos abatement and in accordance with the “Standards of the Industry”. This includes any other work, including trade work conducted in conjunction with the project.
   2. The most recent edition of any relevant regulation, standard, document, or code shall be in effect during the work, regardless of the effective date of this specification’s governing contract. Where conflict among the requirements or with these specifications exists, the most stringent requirements shall be utilized. All regulatory revisions and requirements relating to this project after the contract is signed shall, nonetheless, be incorporated at no additional cost to the Owner.

B. EPA Guidance Documents: Which discuss asbestos abatement work or hauling, and disposal of asbestos waste materials are listed below for the Contractor’s information only. These documents do not describe the work and are not a part of the work of this contract. EPA maintains an information number (800) 334 8571.
   1. Asbestos-Containing Materials in Buildings - A Guidance Document. Parts 1&2 (Orange Books) EPA C00090 (out of print).

2. Guidance for Controlling Asbestos-Containing Materials in Buildings (Purple Book) EPA 560/5-85-024.
3. Friable Asbestos-Containing Materials in Schools: Identification and Notification Rule (40 CFR Part 763).
4. Evaluation of the EPA Asbestos-in-Schools Identification and Notification Rule. EPA 560/5-84-005.
5. Asbestos in Buildings: National Survey of Asbestos-Containing Friable Materials. EPA 560/5-84-006.
6. Asbestos in Buildings: Guidance for Service and Maintenance Personnel. EPA 560/5-85-018.
7. Asbestos Waste Management Guidance. EPA 530-SW-85-007.
8. Asbestos Fact Book. EPA Office of Public Affairs.
9. Asbestos in Buildings. Simplified Sampling Scheme for Friable Surfacing Materials.
10. Commercial Laboratories with Polarized Light Microscopy Capabilities for Bulk Asbestos Identification.
11. A Guide to Respiratory Protection for the Asbestos Abatement Industry. EPA-560-OPTS-86-001.CODES AND REGULATIONS:

C. General Applicability of Codes, Regulations and Standards: Except to the extent that more stringent requirements are written directly into the contract documents, all applicable codes, regulations, and standards have the same force and effect and are incorporated into the contract documents by reference as if copied directly into the contract documents.

D. Federal Requirements: Which govern asbestos abatement work or hauling and disposal of asbestos waste materials including but not limited to the following:
1. U.S. Department of Labor, Occupational Safety and Health Administration, (OSHA), including but not limited to:
   a. Occupational Exposure to Asbestos, Tremolite, Anthophyllite and Actinolite; Final Rules Title 29, Part 1910, Section 1001 and Part 1926, Section 58 of the Code of Federal Regulations.
   b. Respiratory Protection Title 29, Part 1910, Section 134 of the Code of Federal Regulations.
   c. Construction Industry Title 29, Part 1926, of the Code of Federal Regulations.
   d. Access to Employee Exposure and Medical Records Title 29, Part 1910, Section 2 of the Code of Federal Regulations.
   e. Hazard Communication Title 29, Part 1910, Section 1200 of the Code of Federal Regulations.
   f. Specifications for Accident Prevention Signs and Tags Title 29, Part 1910, Section 145 of the Code of Federal Regulations.
2. U.S. Environmental Protection Agency (EPA), including but not limited to:
   a. Regulation for 40 A of the Code of Federal Regulations 763.
   b. National Emission Standard for Hazardous Air Pollutants; Asbestos, NESHAP Revision; Final Rule, 40 CFR, Part 61, of the Federal Register.
   c. Office of Solid Waste publication Asbestos: Waste Management Guidance (EPA/530-SW-85-007).
3. Department of Transportation (DOT) including, but not limited to the following:
   a. Hazard Material Regulations (HMR) 49 CFR parts 171-180.
   b. 49 CFR part 107, et. seq., Performance-Oriented Packaging Standards; Changes of Classification, Hazard Communication, Packaging and Handling Requirements Based on UN Standards and Agency Initiative; Final Rule.

E. Washington State Requirements: WISHA rules which govern asbestos abatement work or hauling and disposal of asbestos waste material including but are not limited to the following:
   1. General Occupational Health Standards Chapter WAC 296 62.
   2. Asbestos Removal and Encapsulation Chapter WAC 296 65.
   3. Safety Standards for Construction Work Chapter WAC 296 155.
   4. Parts – Demolition WAC 296.155.975.
   5. WISHA Regional Directives 79 23 (Amended) regarding minimum airborne fiber concentration for initiation and continuing asbestos medical examinations, 80 16 (amended) regarding respirable air supplied by oil-lubricated compressors, 83 10 (Amended) regarding respirator requirements for removal, demolition, and spraying of asbestos, 87 2 Respiratory Protection Requirements for negative pressure enclosures
   6. Safety Standards Chapter WAC 296 24.

F. Local Requirements which govern asbestos abatement work or hauling, and disposal of asbestos waste materials include but are not limited to the following:
   1. Puget Sound Clean Air Agency (PSCAA) Rule No. 63.

1.06 ASBESTOS ABATEMENT SUBMITTALS:

A. Assumed asbestos containing materials were identified within the project site during the limited hazardous building materials survey. For the ACM within the project scope as well as any suspect ACM not described in the Limited Building Materials Survey and hazardous materials drawing documents but discovered with the project scope of work, the contractor shall provide complete submittals as per Section 01 33 00 Submittal Procedures for review by the Government's representative.

B. Pre-Work Submittals: Submittals must be suitably titled and indexed, providing detailed information concerning the following items as a minimum in the order listed below:
   1. Written Health and Safety Plan that includes the following elements:
      a. Company Accident Prevention Plan: that includes a phone contact list containing the names, addresses, telephone numbers and email addresses of the contractor; contractor's supervisor, and all other contractor personnel who may be required to assist during project work.
      b. Hazard Communication Plan: submit SDS for all materials to be used in the work.
      c. Respiratory Protection Plan (for each contractor that has workers onsite that may be required to wear respirators).
         1) Documentation by letter signed by Contractor that all employees or agents required to wear a negative pressure respirator has been medically evaluated in accordance with WAC 296-62, Part E.
         2) Document NIOSH approvals for all respiratory protective devices utilized on site, including a list of approved components (parts) for each type of respirator that may potentially be used on the project.
         3) Document by letter signed by Contractor that respirator fit testing for all contractor employees and agents who wear a negative pressure respirator is current. This fit testing shall be in accordance with quantitative procedures as detailed in the WAC 296 62, Part E.
         4) Medical Surveillance Program
         5) Site Housekeeping Plan
         6) Daily Job Submittals (examples of forms to be submitted)
   2. Asbestos Work Plan (General): Include a detailed plan of the procedures proposed for use in complying with the requirements, including the following:

a. Methods: A description of all techniques, methods, and special equipment to be used during the contract, including methods for abatement work required for this project (negative pressure enclosures with worker decontamination and waste load-out, mini-enclosures, glovebags, removal of contaminated soils, etc.). Include typical work procedures for each unit of work identified on the bid documents. Refer to the Limited Hazardous Building Materials report and abatement drawings for further information on typical abatement work included within this project.

b. Shop Drawings: Provide shop drawings at each work area throughout the contract duration to show the layout of containment, exhaust route, regulated area barriers, construction barriers, etc. Show where the negative air machines, worker decontamination chambers, waste load-out areas, power, and make-up air will be placed. Include view window and manometer locations. This information will be submitted and approved by the Owner's representative, 72 hours prior to the start of work.

c. Handling of Waste: Specific information relating to handling, transport, and disposal of asbestos-containing waste.

1) Landfill: Identify the proposed disposal site at which any waste material generated during the project will be disposed and furnish evidence of all necessary government approvals to dispose of the waste.

3. Laboratory Qualification Information: Submit the proposed Independent Testing Laboratory's written Laboratory Quality Control Program.

a. The Laboratory shall prove proficiency in the AIHA/NIOSH PAT Program and NVLAP program. The submitted copy of the Quality Control Program shall minimally meet or exceed WISHA standards. Failure to comply with these standards will require lab work to be subcontracted to another laboratory at no additional cost to the Owner.

4. Air Monitoring Program: The Air Monitoring Program shall include the proposed sampling plan, sampling procedures, and field quality control procedures of the firm conducting the air monitoring. Each type of enclosure will require a specific air monitoring plan (negative pressure enclosures with worker decontamination and waste load-out, mini-enclosures, glovebags).

a. Worker Certification: Submit copies of Asbestos Supervisor and Asbestos Worker Certifications for employees scheduled to work on the project in compliance with WAC Chapter 296-65-010.

b. Contractor Certification: Contractor shall submit proof of current certification of Contractor by L&I as a certified asbestos abatement firm.

c. Asbestos Supervisor/Competent Person: Submit the name, Asbestos Supervisor Certification, and resume of experience of the assigned onsite supervisor. At a minimum, the supervisor shall have successfully completed a Supervisor Training Course in compliance with WAC Chapter 296-65-007.

d. Respirator Fit Test Records: Submit a copy of the quantitative and qualitative fit-test records for personnel performing asbestos work.

5. Notifications: Submit a copy of all required notifications and permits obtained by the Contractor (Washington State Department of Labor and Industries and Olympic Region Clean Air Agency [ORCAA]). Submit upon receipt any approved amendments to notifications or re-notification for multi-phase activities.

C. Construction Phase Submittals: Submit the following information daily to the Owner and Owner's representative. This information shall be submitted prior to the start of work on the next scheduled work shift (if applicable).

1. Air and bulk sample data collection sheets and laboratory analytical results. The laboratory results, signed by the lab manager, shall be returned to the site prior to the start of abatement for the same work shift the following day.

2. Certified Asbestos Supervisor daily inspection report.

3. Bonds and Insurance: Submit upon receipt any approved amendments to notifications or re-notification for multi-phase activities.

D. Post construction submittals: Asbestos Work Records – The Contractor shall submit to the Owner and Owner's representative within TWENTY-FIVE days after substantial completion of the regulated building material work, the following:

1. Project Overview: Provide a basic project summary identifying the scope and summarizing the work performed by the Contractor. Provide enough information to have a basic understanding of the project and include project and contact names and ID numbers, Contractor's company name, where, when, and what type of work was completed, and discussion of significant problems encountered during the work. Written summary shall include a description of all changes or modifications to the Contractor's pre-construction Work Plan.
2. Certification: Provide written certification from the Contractor's Project Manager or Supervisor that the Contractor has fully inspected the work area and completed work in strict accordance with the Specifications.
3. Air Monitoring: Submit documentation of all contractor/sub-contractor air monitoring results relative to regulatory compliance. Include copies of all air monitoring data sheets, chain-of-custody documentation and analysis reports for sampling conducted at the site.
4. Project Record Documents: Provide project records including documentation of all contract changes, and copies of work site entry logbooks, safety logs, sign-in sheets, and supervisor daily field reports. Provide copies of project meetings for pre-abatement, construction period, and project closeout meetings.
5. Disposal Manifests: Submit copies of all asbestos waste disposal transportation and disposal manifests including signed receipts from the landfill, and chain-of-custody.
6. Submit copies of amendments or modifications to pre-construction, Notices, and Permits that were filed with regulatory agencies during the project.
7. Submit copies of inspections or visits by regulatory agencies. Include copies of any citations or notices received by the Contractor from regulatory agencies during the project.

1.07 AIR MONITORING:

A. The following describes air monitoring to verify that the building beyond the work area and the outside environment remain uncontaminated. This section also sets forth airborne fiber levels both inside and outside the work area as action levels and describes the action required by the Contractor if an action level is met or exceeded.

B. The Contractor is required at its own expense to take its own employee air samples by L&I per the following regulations:

1. WAC 296-62-07709 (Exposure Monitoring)
2. WAC 296-62-07735 (Appendix A)

C. The air samples must be analyzed by a laboratory in accordance with the following:

1. Personnel conducting onsite asbestos air sample analysis shall be listed on AIHA's Registry of Proficiency and shall have successfully completed NIOSH 582 (or equivalent) training.
2. The laboratory conducting bulk sample analysis shall be accredited by the United States Department of Commerce, National Institute of Standards and Technology's NVLAP program.
3. The laboratory conducting analysis of air samples shall be satisfactory participants in the NIOSH Proficiency Analytical testing (PAT) program and AIHA Registry and shall produce their PAT number and results on request.

D. Air Monitoring Requirements (interior abatement areas only):

1. Baseline/Pre-abatement Air Monitoring: Prior to beginning asbestos abatement tasks, the Contractor shall conduct air monitoring to determine the relative airborne fiber concentrations in an area during the normal functioning of that building or space.
2. Personal Samples: The Contractor shall daily conduct representative personal monitoring in each abatement work area on each representative work activity.
3. Final Air Clearance: The contractor shall conduct aggressive air sampling of the regulated area after the Owner and/or Owner's representative certifies visual clearance and bridging and penetrating encapsulant has been applied. The containment will remain in place until the Contractor's final air clearance analytical results meet acceptable levels. Paragraph 3.09 details the work area clearance process.
4. Where feasible, samples shall be collected according to the WISHA Reference Method (WAC 296 62 07735, Appendix A) and Detailed Procedure for Asbestos Sampling and Analysis (WAC 296 62 07737, Appendix B) and NIOSH Method 7400 (as revised). All samples shall be collected at a height of approximately 60 inches above the working floor for projects with 8-10-foot ceiling heights, unless otherwise directed.

E. Analytical Methods: The following methods will be used for analyzing filters used to collect air samples other than clearance:
1. Twenty-five-millimeter (25 mm) cellulose ester filters with 50mm conductive cowl extensions will be used for all sampling. Sampling and analysis for personal samples will be conducted according to the OSHA/WISHA Reference Method. Area clearance samples will be analyzed according to the NIOSH 7400 Method using airflow rates between 1 - 10 liters per minute. At least 1200 liters of air will be collected. All inside and outside air sampling shall be continuous throughout work shift.
2. TEM analysis will be NIOSH 7402 method.

F. Sample Volumes: Sample volumes shall be sufficient to establish the quantification limit (QL) necessary for the type of sample collected. The formulas listed in the WISHA Reference Method will be used to calculate sample volumes and/or flow rates. Sample volumes will be sufficient to collect between 100-1300 fibers per square millimeter (f/mm^2) of filter area. At a minimum, for Pre-abatement and Clearance samples, the QL will be 0.005 f/cc based on the EPA suggested minimum filter loading of 10 fibers in 100 fields counted. For personal samples, the QL will be 0.05 f/cc. Note: this cannot be accomplished with a STEL.

G. Laboratory Testing:
1. The Contractor will have a qualified laboratory perform analysis of the air samples required to monitor abatement procedures. The laboratory results, signed by the lab manager, shall be returned to the site prior to the start of abatement for the same work shift the following day.
2. Written Reports: All air monitoring test results and daily inspection logs will be posted at the job site daily.

PART 2 - PRODUCTS

2.01 MATERIALS:

A. GENERAL:
1. Damaged, deteriorating or previously used materials shall not be used and shall be removed from the worksite and disposed of properly.
2. Polyethylene sheeting for walls and stationary objects shall be a minimum of 6 mil thick. For floors and all other uses sheeting of at least 6 mil thickness shall be used in widths selected to minimize the frequency of joints. Polyethylene shall be fire retardant per UL Ratings and ASTM standards D-2898-81 and D-3201-79.

3. Disposal bags shall be 6 mil polyethylene, pre-printed with labels as required by EPA regulation 40 CFR 61.150 (a) (i) (iv) (v) or WISHA Chapter 296 62 0072.
4. Disposal drums shall be metal or fiberboard with locking ring tops; labeled in accordance with EPA regulation 40 CFR 61.150 (a) (i) (iv) (v).
5. Warning signs as required by WISHA Chapter 296 62 07721.

B. SURFACTANT: (wetting agent): shall be a 50/50 mixture of Polyethylene ester and polyoxyethylene ester, or equivalent, mixed in a proportion of 1 fluid ounce to 5 gallons of water as specified by manufacturer. (An equivalent surfactant shall be understood to mean a material with surface tension of 29 dynes/cm as tested in its properly mixed concentration, using ASTM method D1331 56- "Surface and Interfacial Tension of Solutions of Surface-Active Agents.")

C. ENCAPSULATION PRODUCTS:
1. Encapsulation materials shall be the penetrating type and conform with the following characteristics:
   a. Encapsulants should not be solvent-based or utilize a vehicle consisting of hydrocarbons.
   b. Encapsulants shall be non-flammable.

D. ENCLOSURE:
1. Enclosure materials shall be fire-retardant and conform to the applicable local fire codes.
2. The enclosures shall be constructed of materials such that when the enclosure is completed there is limited potential for impact damage to the enclosure and no potential for fiber release.

2.02 EQUIPMENT:

A. GENERAL (all abatement projects):
1. A sufficient quantity of negative pressure ventilation units equipped with HEPA filtration and operated in accordance with ANSI 29.2 79 (local exhaust ventilation requirements) and EPA guidance document EPA 560/5 83-002 Guidance for Controlling Friable Asbestos-Containing Materials in Buildings Appendix F: Recommended Specifications and operating procedures for the use of negative pressure systems for asbestos abatement shall be utilized so as to provide one work place air change every 15 minutes.
2. To calculate total air flow requirement:

$$\text{Total ft}^3\text{/min} = \frac{\text{Vol. of work area (in ft}^3\text{)}}{15 \text{ min}}$$

To calculate the number of units needed for the abatement:

$$\text{Number of units needed} = \frac{[\text{Total ft}^3\text{/min}]}{[\text{Capacity of unit in ft}^3\text{/min x 70\%}]}$$

If air-supplied respirators are utilized, estimate the volume of supplied air, and add to workplace air volume when calculating ventilation requirements. For mini-enclosures and glove bags, a HEPA filtered vacuum system may be utilized to provide negative air pressure. Enough air shall always be exhausted to create a minimum pressure of -0.02 inches of water within the enclosure with respect to outside the enclosure.

3. Contractor shall install and maintain a continuous read strip chart, or similar digital recording differential pressure meter (manometer).
   a. Adhere strictly to manufacturer's recommendations for calibration of manometer.
   b. The manometer must be equipped with an audible system programmed to sound if pressure within the enclosure in respect to pressure outside the enclosure drops to -0.01 inches of water or lower.

4. Except as described in part 2.02 A. 6 of this section, Type “C” air supplied respirators operated in the pressure demand mode with full face pieces and HEPA-filtered escape cylinders are required by WISHA for negative pressure containment abatement work until the successful completion of final clearance air monitoring. Spectacle kits and eyeglasses must be provided for employees who wear glasses and who must wear full-face piece respirators. Respirators shall be provided that have been tested and approved by the National Institute of Occupational Safety and Health for use in asbestos contaminated atmospheres.
5. Compressed air systems shall be designed to provide air volumes and pressures to accommodate respirator manufacturer’s specifications. The compressed air systems shall have a receiver of adequate capacity to allow escape of all respirator wearers from contaminated areas in the event of compressor failure. Compressors must meet the requirements of 29 CFR 1910.134(d). Compressors must have an in-line carbon monoxide monitor, and periodic inspection of the carbon monoxide monitor must be evidenced. Documentation of adequacy of compressed air systems/respiratory protection system must always be retained onsite. This documentation will include a list of compatible components with the maximum number and type of respirators that may be used with systems providing air of sufficient quality (Grade D breathing air as described in Compressed Gas Association Commodity Specifications G 7.1.)
    a. At least two (2) dedicated air lines and respirators shall always be available to the Owner and/or Owner’s representative or regulatory agency personnel. Contractor shall provide clean respirators in good repair for the Owner and/or Owner’s representative or regulatory agency personnel’s use.

6. As per Division of Occupational Safety & Health (DOSH) of the Washington State Department of Labor & Industries Directive 23.90 published on July 6, 2022, the use of tight-fitting, powered, air-purifying respirators (PAPRs) equipped with high-efficiency particulate filters is allowed for class I asbestos, negative pressure containment abatement work where exposure levels do not exceed 1.0 fibers/cubic centimeter (f/cc) as an eight-hour time weighted average. For all class I asbestos work on materials with greater than 30% amosite or crocidolite asbestos where exposure levels exceed, or are expected to exceed, 1.0 f/cc as an eight-hour, time-weighted average, the contractor must continue to provide, and require to be worn, a full-facepiece supplied air respirator (SAR) as described in parts 2.02 A. 4 and 2.02 A. 5 of this section until air monitoring indicates the concentration of asbestos fibers does not exceed 1.0 f/cc..
7. Full body disposable protective clothing, including head, body, and foot coverings (unless using footwear as described in 2.02 A 8) consisting of material impenetrable by asbestos fibers (Tyvek or equivalent) shall be provided to all workers and authorized visitors in sizes adequate to accommodate movement without tearing.
8. Additional safety and fall protection equipment (e.g., hard hats meeting the requirements of ANSI Standard Z89.1 2009, eye protection meeting the requirements of ANSI Standard Z87.1 2003, safety shoes meeting the requirements of ANSI Standard Z41.1 1991, disposable PVC gloves) as necessary shall be provided to all workers and authorized visitors.
9. Non-skid footwear shall be provided to all abatement workers. Disposable clothing shall be adequately sealed to the footwear to prevent body contamination.
10. Only single-use, disposable towels and clothing will be allowed.
11. A sufficient supply of disposable mops, rags and sponges for work area decontamination shall be available.
12. For mini-enclosures and glove bags, a HEPA-filtered vacuum system shall be utilized to provide negative air pressure where applicable.

B. Scaffolding:
   3. Any scaffolding used must be cleaned with no visible debris prior to bringing scaffolding onsite and completely free of debris during and after installation.
   4. Follow all manufacturer recommendations and all applicable regulations in the set-up, use and teardown of all scaffolding used.
   5. The Contractor's designated competent person shall be onsite during all scaffolding set-up, use and teardown.

PART 3 - EXECUTION

3.01 INSPECTIONS:

A. Pre-abatement:
   1. The abatement work shall not begin until:
      a. The Contractor and the Owner and/or Owner's representative have inspected the site to ensure that work can begin.
      b. Negative pressure ventilation and supplied air systems, if used, are functioning adequately. Contractor must test all systems.
      c. All required pre-work submittals, notifications, postings, and permits have been provided and are satisfactory to the Owner and/or Owner's representative.
      d. All equipment for abatement cleanup and disposal is on hand.
      e. All worker and supervisor training, certification and medical monitoring are current, and documentation is available on the job site.

B. Throughout the Project: The Contractor's competent person shall perform daily inspections of the site. The Owner and/or Owner's representative may perform routine inspections of the site to assure compliance with applicable regulations and the project plans and specifications. The Contractor's competent person must generate a written daily report.

C. Post-Abatement: The Clearance process is discussed in Paragraph 3.8 of this section.

3.02 SITE SECURITY:

A. The work area is to be restricted only to authorized, trained, and protected personnel. These may include the Contractor's employees; employees of subcontractors; and Owner and/or Owner's representative employees; federal, state, and local inspectors and other authorized or designated individuals. A list of authorized personnel shall be established by the Contractor prior to job start and posted as directed by these specifications. Except for emergency response personnel, the Contractor shall approve unannounced visitors not listed above prior to project area entry.

B. For projects requiring the use of a negative pressure enclosure, a logbook shall be maintained in the clean room area of the worker decontamination system. Everyone who enters the work area must sign in, recording: name, affiliation (Contractor, regulatory agency, etc.), work phone number, purpose of entry: acknowledge existence, review and understanding of the project's emergency contingency plan and time in and time out for each entry. Contractor shall be responsible for site security during abatement operations.

3.03 EMERGENCY PLANNING:

A. Emergency contingency plans shall be developed by the Contractor prior to initiation of any work. These plans shall be a component of the Contractor's Health and Safety Plan.

B. Emergency planning shall include consideration of containment collapse (through negative pressure pull-down) or breach (hit, cut or torn by), fire explosion, toxic atmosphere, electrical hazards, slips, trips and falls, confined spaces and heat related injury. Written procedures shall be developed and employee training in these procedures shall be provided and documented. Emergency planning shall include procedures to follow in the event of power disruptions during work in a negative air enclosure.

C. Employees shall be trained in evacuation procedures in the event of workplace emergencies.
   1. For non-life-threatening situations - employees injured or otherwise incapacitated shall decontaminate following normal procedures with assistance from fellow workers if necessary, before exiting the workplace to obtain proper medical treatment.
   2. For a life-threatening injury or illness, measures to stabilize the injured worker, remove them from the workplace and secure proper medical treatment shall take priority over worker decontamination.

D. Telephone numbers of all emergency response personnel shall be prominently posted in the clean room, adjacent to the containment in the project area.

3.04 PERSONNEL PROTECTION REQUIREMENTS:

A. Training: Train and certify all workers who are required to remove, encapsulate, or barricade asbestos or to transport or dispose of asbestos as required by WAC 296-62-077, 40 CFR 763 and 49 CFR 382. Note: In addition to using a certified asbestos sub-contractor employing certified asbestos workers/supervisors to accomplish all ACM disturbance and removal, workers impacting materials containing <1% asbestos fibers must receive the equivalent of “Class IV” asbestos worker training (e.g., 2-hour awareness training), in accordance with WAC 296-62-07722(5) prior to disturbing these materials
   1. Special onsite training specific to equipment and procedures unique to this job site shall be performed as required.

B. Safety Meeting: The Contractor shall conduct a safety meeting at the beginning of the project and weekly thereafter. Topics to be discussed include, but are not limited to: emergency exiting routes and procedures, location of telephone and emergency numbers, fire extinguisher locations, first aid kit, special precautions for toxic or hazardous materials (MSDS information), protective equipment, scaffolding procedures, proper use of ladders, electrical safety, previous week’s air sample results, etc. All attendees shall sign an acknowledgment of attendance.

C. Protective Clothing: Provide protective equipment to all workers in the work area per paragraph 2.2.

3.05 PREPARATION OF THE WORK AREA:

A. Post barrier tape and caution signs meeting the specifications of WISHA Chapter 296 62 07711 at the locations and approaches to a location where airborne concentrations of asbestos may be expected to exceed the pre-abatement concentration. Signs shall be posted at a distance sufficiently far enough away from the work area to permit an employee to read the sign and take the necessary protective measures to avoid exposure. Additional signs may need to be posted following construction of workplace enclosures or barriers. Placement of these signs will be behind the construction barrier walls erected by the Contractor and shall not be placed in a location visible to the public outside of the project area.

B. All conduit joints, junction boxes, motor connections, motors, conveyors, control panels and associated equipment in the work areas shall be protected from amended water. All wire in conduit that passes through the work area shall always remain energized, however the Contractor is responsible for all electrical safety.

C. Pre-clean, remove furnishings and install drop cloths using HEPA filtered vacuums or wet cleaning methods as appropriate. Do not use methods that would raise dust such as dry sweeping or vacuuming with equipment not equipped with HEPA filters. Do not disturb asbestos-containing materials during the pre-cleaning phase.

D. Remove from the work area all objects that are movable to protect them from potential asbestos contamination.

3.06 GENERAL REMOVAL PROCEDURES:

A. Wet all asbestos containing material with amended water solution using equipment capable of providing a fine spray mist. Avoid knocking the material loose during the wetting operation. Saturate the material to substrate prior to removal; however, do not allow excessive water to accumulate in the work area. Keep all removed material saturated until it can be containerized for disposal. Maintain a high humidity in the barrier or enclosure throughout the abatement period by misting or spraying to ensure material saturation and reduce the potential for elevated airborne concentrations. Wetting procedures are not equally effective on all types of asbestos-containing materials. Nonetheless, they shall be used in all cases.

B. Double bag all waste material prior to removal from the enclosure system or immediately upon removal of the barrier (glove bag).

C. The work area shall be cleaned of all ACM prior to the visual inspection by the Owner and/or Owner's representative. If any accumulation of residue is observed, it will be assumed to be asbestos. Re-cleaning may be required, at no additional cost to the Owner, until all suspect material is removed. Re-cleaning and inspection will continue until no visible suspect material remains. After the work area passes the visual inspection, the Contractor shall perform encapsulation of all cleaned surfaces.

D. Refer to Paragraph 3.08 of this specification for work area clearance process.

3.07 NEGATIVE PRESSURE ENCLOSURE:

A. Prepare work area as indicated in Paragraph 2.01, this section.

B. Verify shut down and lock out all heating, cooling, and air conditioning system (HVAC) components that are in, supply, or pass through the containment area, if possible. Seal all ducts and smoke test the containment before beginning abatement work within the enclosure.

C. Pre-clean all fixed objects in the containment area using HEPA filtered vacuums and/or wet cleaning techniques as appropriate. Careful attention must be paid to machinery bind grills or gratings where access may be difficult, but contamination significant. Pay particular attention to wall, floor, and ceiling penetrations behind fixed items. After pre-cleaning, enclose fixed objects in 6-mil polyethylene sheeting and seal securely in place with tape.

D. Seal off all windows, doorways, elevator openings, corridor entrances, drains, ducts, grills, grates, diffusers and all other openings between the containment area and uncontaminated areas outside of the containment area including the outside of the building, tunnels, and crawl spaces with 6 mil polyethylene sheeting and tape.

E. Cover floors in the containment area with polyethylene sheeting as follows:

1. Seal all floor drains and other floor openings in area with 6 mil sheeting and duct tape.
2. Plastic shall be sized to minimize seams. If the floor area necessitates seams, those on successive layers of sheeting shall be staggered to reduce the potential for water to penetrate to the flooring material. A distance of at least 6 feet between seams is required. Do not locate seams at wall/floor joints or cracks in the concrete flooring.
3. Floor sheeting shall extend to at least 12 inches up the sidewalls of the containment area.
4. Sheeting shall be installed in a fashion to prevent slippage between successive layers of material.

F. Clearly identify and maintain emergency and fire exits from the work area.

G. Cover walls in the containment area with polyethylene sheeting as follows:

1. Seal all opening in wall with critical barriers with 6 mil polyethylene sheeting and duct tape. Ensure airtight seal.
2. Each wall surface shall be covered with two (2) layers of 6 mil polyethylene sheeting.

3. Plastic shall be sized to minimize seams. Seams shall be staggered and separated by a distance of at least 6 feet.
4. Wall sheeting shall overlap floor sheeting by at least 12 inches beyond the wall/floor joint to provide a better seal against water damage and for negative pressure.
5. Install two or more transparent plastic viewing ports in the walls of the enclosure in such a manner to allow unobstructed viewing of all components within the enclosure, which are involved in the project. Existing windows shall be utilized for viewing ports as needed. Movable curtains on the outside shall cover viewing ports.

H. Worker Decontamination Facility:

1. Worker decontamination enclosure systems shall be provided for workers entering or exiting the containment area. The worker decontamination shall consist of a clean change room, a shower, and an equipment room, each separated from each other and from the containment area by curtained doorways. The decontamination unit shall be constructed of metal, wood, or plastic framing systems. A worker decontamination facility is required for any Class I asbestos work involving greater than 25 linear feet or 10 square feet.
2. The worker decontamination enclosure systems constructed at the work site shall utilize 6 mil opaque black or white polyethylene sheeting or other acceptable materials for privacy.
3. The worker decontamination facility should be constructed contiguous to the negative - pressure work area or regulated area for Class I work. Where construction contiguous to work area is not feasible, the decontamination facility shall be constructed with a polyethylene-lined tunnel connecting the decontamination facility to the work.
4. Entry to and exit from all material decontamination chambers and decontamination enclosure systems shall be through curtained doorways consisting of two (2) sheets of overlapping polyethylene sheeting. One sheet shall be secured at the top and left side, the other sheet at the top and right side. Both sheets shall have weights attached to the bottom to ensure that they hang straight and maintain a seal over the doorway when not in use. Doorway designs providing equivalent protection and acceptable to the Owner and/or Owner's Consultant may be utilized. Inverted T double sheet doorway with a flap door is also acceptable.
5. Clean room shall be sized to adequately accommodate the work crew. Benches shall be provided as well as storage for employees' street clothes. Shelves for storing respirators shall also be provided in this area. Clean work clothes (if required under disposables); clean disposable clothing, replacement filters for respirators, towels and other necessary items shall be provided in adequate supply at the clean room. A location for postings shall be provided in this area. Lighting, heat, and electricity shall be provided as necessary for comfort.

I. Air Pressure Differential:

1. Provide a fully operational negative air system within the work area and continuously maintain a pressure differential across work area enclosures of 0.02 inches of water column.
2. Provide fully operational negative pressure systems supplying a minimum of one air change every 15 minutes. Determine the volume in cubic feet of the work area by multiplying floor area by ceiling height. Determine total ventilation requirement in cubic feet per minute (CFM) for the work area by dividing this volume by the air change rate.
3. Provide a minimum of one back-up negative air for every four primary negative air units used. A minimum of one back-up negative air unit will be required if less than four primary units are used. The back-up negative air unit(s) shall be of equal capacity to primary unit(s).

J. Once constructed and reinforced as necessary with negative pressure ventilation units in operation as required, test enclosure for leakage utilizing smoke tubes. Repair or reconstruct as needed.

K. Clearly identify and maintain emergency and fire exits from the containment area.

L. Remove, clean, and enclose in polyethylene the ceiling mounted objects such as lights and other items that may interfere with the abatement process and were not previously cleaned and sealed off. Utilize localized spraying of amended water and/or HEPA vacuums to reduce fiber dispersal during the removal of these fixtures.

3.08 WORK AREA CLEARANCE

A. The abatement work is complete when the work area is visually clean, and the Contractor determines that the area is ready for the visual inspection process. The following work area clearance process shall apply to all work areas where Class I or II asbestos project work was completed, except for outdoor work, where clearance sampling is not required.

1. Following Contractor certification that work area is visually clean the Owner's Consultant will perform a visual inspection of the project area.
2. If deficiencies are encountered during the inspection, the Owner's Consultant shall create a punch list and forward to the Contractor.
3. Contractor shall resolve all punch list items and repeat the work area clearance process at no additional cost to the owner. The Owner will not be charged for the cleanup time, materials, air monitoring costs, or delay costs. Delays resulting from non-compliant visual inspections will not constitute an extension to the project time.
4. Upon receipt of visual clearance, the Contractor shall apply a lockdown type encapsulant to surfaces on which asbestos has been removed.
   a. In cases when negative pressure enclosures have been used, maintain operation of negative air system during the encapsulation process.
   b. Mix ratio of encapsulant shall be to manufacturer's recommendations.
   c. Apply encapsulant with airless sprayer on to substrate.
5. After encapsulation, the Contractor shall conduct final clearance sampling as per this section.
6. All enclosures clearance samples will be taken as follows.
   a. Before sampling pumps are started, the exhaust from forced air equipment (leaf blower with at least 1 horsepower electric motor) will be swept against the walls, ceilings, floors, ledges, and other surfaces in the room. This procedure will be continued for 1 minute per 1,000 square feet of area. Fans may be used to circulate air within work enclosure.
   b. Samples will be collected in areas subject to normal air circulation away from room corners, obstructed locations and sites near windows, doors or vents in areas coinciding with pre-abatement sample locations.
   c. The HEPA machines must be left running during the procedure.
   d. The Owner's Consultant may collect quality assurance final clearance air samples. Conflicts between Contractor's clearance air monitoring analytical results and Owner's Consultant QA/QC analytical results will be resolved as specified in 1.7 Air Monitoring.

B. General: The number and volume of air samples taken, and analytical methods used will be in accordance with the following schedule. Sample volumes given may vary depending upon the analytical instruments used.

C. In each work area after completion of all cleaning work, a minimum of one (1) sample and one lab blank will be taken at a flow rate of 1 to 10 liters per minute to give a fiber density of between 100 to 1,300 fibers/mm2 on the filter and analyzed as follows:

1. Analysis: Fibers on each filter will be measured using the NIOSH 7400 procedures. At least 1200 liters of air will be collected.
2. Release Criteria: Decontamination of the work area is complete when every clearance sample is equal or less than 0.01 fibers/cc or less than pre-abatement levels whichever is lower. If any sample exceeds 0.01 fibers/cc, then the decontamination is incomplete and re-cleaning is required.
3. The services of a testing laboratory will be employed by the Contractor to perform laboratory analysis of the air samples. Verbal laboratory results will be available within eight (8) hours of taking clearance samples. A complete record of all air monitoring tests and inspections will be furnished to the Owner and/or Owner's Consultant via the Contractor within 24 hours of sample collection.

D. Following review and acceptance of the Contractor and Owner's consultant's QA/QC final air clearance results, the Owner's consultant will complete the Certificate of Clearance form.

3.09 DISPOSAL PROCEDURES:

A. Materials containing <1% asbestos fibers may be disposed of as normal construction debris.

B. Shower water shall be drained, collected, and filtered through a system with at least a 5.0-micron particle size collection capability.

C. Sealed and labeled containers of asbestos containing waste shall be removed from the immediate project area and transported to the prearranged disposal location as the work progresses.

D. Labeling: Each bag of asbestos waste shall be pre-labeled in accordance with 29 CFR 1910.1200 (f) of OSHA's Hazard communication Standard as follows:

DANGER
CONTAINS ASBESTOS FIBERS
MAY CAUSE CANCER
CAUSES DAMAGE TO LUNGS
DO NOT BREATHE DUST
AVOID CREATING DUST

In addition, a second pre-printed label must be present on each bag in accordance with 49 CFR Parts 171 and 172 of U.S. Department of Transportation regulation as follows:

RQ HAZARDOUS SUBSTANCE
SOLID, NOS
ORM-E, NA 9188
(ASBESTOS)

E. All demolition debris materials, including asbestos-containing materials, except those containing substances classified as hazardous or dangerous by controlling local, state, or federal regulatory agencies, shall upon their demolition became the property of the Contractor. All such material, including those containing hazardous or dangerous substances, shall be removed, and properly disposed of away from the site and on property not owned by the Owner.

F. Disposal must occur at an authorized site in accordance with regulatory requirements of ORCAA, Rule No. 63 and applicable state and local guidelines and regulations.

G. Waste shipment, waste manifest, and disposal records shall be delivered to the Owner and/or Owner's Consultant within 25 days of completion of the abatement work. This information shall

document the pickup site and disposal site, the quantity of the asbestos waste and the type of containers used. The Contractor and the Disposal Site Operator shall sign waste manifest. If a separate hauler is employed, their name, address, telephone number and signature shall also appear on the manifest.

H. Transportation to the Landfill:

1. All transportation of asbestos containing waste material shall adhere to federal, state, and local regulations, including, but not limited to:
   a. Hazard material regulation 48 CFR parts 171.180.
   b. 49 CFR part 107.

I. Disposal at the Landfill:

1. Bags, drums, and components may be inspected, as they are off-loaded at the disposal site. Material in damaged containers shall be repacked in empty drums or bags, as necessary.
2. Waste containers shall be placed on the ground at the disposal site, not pushed, thrown, or dumped out of trucks.
3. Following the removal of all containerized waste, the truck cargo shall be decontaminated using HEPA vacuums or wet methods to meet the no visible residue criteria. Polyethylene sheeting shall be removed and discarded along with contaminated cleaning materials and protective clothing in bags or drums at the disposal site.

END OF SECTION

CERTIFICATE OF CLEARANCE

CONTRACTOR CERTIFICATION OF VISUAL INSPECTION

In accordance with Section 02 82 14, Paragraph 3.8 "Work Area Clearance", the Contractor's supervisor/competent person hereby certifies that he/she has visually inspected the work area (all surfaces including pipes, beams, ledges, walls, ceiling and floor, Decontamination Unit, sheet plastic, etc.) and has found no dust, debris, or residue.

IDENTITY OF WORK AREA	QUANTITY REMOVED	DATE	TIME

COMPETENT PERSON	SIGNATURE	CERTIFICATE #	EXPIRATION

OWNER'S REPRESENTATIVE CERTIFICATION OF VISUAL INSPECTION

In accordance with Section 02 82 14, Paragraph 3.08 "Work Area Clearance" the Owner's Representative hereby certifies that they have visually inspected the work area (all surfaces including pipes, beams, ledges, walls, ceiling and floor, Decontamination Unit, sheet plastic, etc.) and have found no dust, debris, or residue.

AHERA BUILDING INSPECTOR	SIGNATURE	CERTIFICATE NO.	EXPIRATION

IDENTITY OF WORK AREA	QUANTITY REMOVED		
		PASS	FAIL
			SEE PUNCHLIST

CONTRACTOR'S FINAL AIR CLEARANCE CERTIFICATION

The Contractor hereby certifies that he/she has conducted air clearance sampling (after encapsulation) according to the specifications and this sampling is valid to the best of his/her knowledge and belief. Contractor must attach chain of custody and final laboratory results.

IDENTITY OF WORK AREA	AIR SAMPLE I.D. #	FLOW RATE	VOLUME

DATE	TIME	ANALYST	LABORATORY	RESULTS

AHERA BUILDING INSPECTOR APPROVAL FOR RE-OCCUPANCY / DEMOLITION

by: (Signature)_____date_____

PRINT NAME_____Certificate No._____Exp.date_____

SECTION 02 83 00 - HEAVY METALS CONTAINING MATERIALS

PART 1 - GENERAL

1.01 RELATED WORK DESCRIBED ELSEWHERE

A. The provisions and intent of the contract, including the General Conditions, Special Conditions and General Requirements apply to this work as if specified in this Section. Work related to this Section is described in:

1. Section 02 82 00 – Asbestos Abatement
2. Section 02 84 17 – Universal and other Regulated Waste Activities

1.02 DESCRIPTION OF WORK

A. General work items include, but are not necessarily limited to:

1. No accessible building materials within the project scope are known to contain detectable concentrations of lead at or above and below the United States Department of Housing and Urban Development (HUD) definition of lead-based paint (1.0 milligrams per square centimeter or equal to/greater than 0.5% by weight).
2. There is a potential for exposure to lead and lead dust during asbestos abatement and other restoration work from painted surfaces not accessible to inspectors during the survey. The Contractor is responsible for monitoring work activities and determining when work involves hazardous materials and conditions that require conformance with specified regulatory requirements. Applicable regulations regarding exposure to lead (WAC 296-155-176) apply to this project.
3. The concrete foundation of Fire Station 57 was found to be arsenic containing (65 mg/kg).
4. There is a potential for exposure to arsenic and arsenic dust during asbestos abatement and other restoration work that disturbs arsenic containing materials not accessible to inspectors during the survey. The Contractor is responsible for monitoring work activities and determining when work involves hazardous materials and conditions that require conformance with specified regulatory requirements. Applicable regulations regarding exposure to arsenic (WAC 296-848) apply to this project.
5. Waste Characterization and Recycling of Demolition Debris is the responsibility of the contractor.
6. See the Limited Hazardous Building Material Surveys – RFM Fire Station 57 Project, and the abatement design drawings HA001 – HA101 prepared by EHS-International for a site summary of the lead containing materials identified within the project scope of work.

1.03 CODES AND REGULATIONS

A. Due to the potential health and environmental hazards associated with the work at this site as described in this section, the work shall be performed in compliance with the applicable provisions of the Washington Industrial Safety and Health Act, and the Washington State Hazardous Waste Management Act, as well as other applicable federal, state, and local codes and regulations governing hazardous materials and hazardous waste. The Contractor is fully responsible for planning and executing all the work under this Contract in a manner that meets or exceeds the requirements of the Washington Administrative Code (WAC 296-62-07521, WAC 296-155-176, and WAC 296-848) for protecting the health and safety of employees, the public, and for protecting the environment.

B. The following regulations of the U.S. Department of Labor, Occupational Safety and Health Administration (OSHA), the U.S. Environmental Protection Agency (EPA) and applicable requirements of the State of Washington are pertinent to this work. Other applicable regulations not specifically identified herein also apply.

1. United States Department of Labor, Occupational and Health Administration (OSHA):

a. 29 CFR 1910 Occupational Safety and Health Standards
b. 29 CFR 1910.134 Respiratory Protection
c. 29 CFR 1910.1018 Arsenic
d. 29 CFR 1910.1025 Lead
e. 29 CFR 1910.1200 Hazard Communication
f. 29 CFR 1910 Safety and Health Regulations for Construction
g. 29 CFR 1926.55 Gases, Vapors, Fumes, Dusts, and Mists
h. 29 CFR 1926.57 Ventilation
i. 29 CFR 1926.62 Lead Exposure in Construction; Interim Rule (with appendices A, B, C, and subpart D)

2. United States Environmental Protection Agency:
   a. 40 CFR 148 Hazardous Waste Injection Restrictions
   b. 40 CFR 260 Hazardous Waste Management Systems: General
   c. 40 CFR 261 Identification and Listing of Hazardous Waste
   d. 40 CFR 262 Standards Applicable to Generators of Hazardous Waste
   e. 40 CFR 263 Standards Applicable to Transporters of Hazardous Waste
   f. 40 CFR 264 Standards for Owners and Operators of Hazardous Waste, Treatment, Storage, and Disposal Facilities
   g. 40 CFR 265 Interim Status Standards for Owners and Operators of Hazardous Waste Treatment, Storage, and Disposal Facilities
   h. 40 CFR 268 Land Disposal Restrictions
   i. 40 CFR 745 Lead; Requirements for Lead-based Paint Activities; Proposed Rule
   j. 49 CFR 172 Hazardous Materials Tables and Hazardous Materials Communications Regulations
   k. 49 CFR 178 Specifications for Packaging
3. National Fire Protection Association (NFPA):
   a. NFPA 701(1996) Methods of Fire Test for Flame-Resistant Textiles and Films
4. National Institute for Occupational Safety and Health (OSHA):
   a. NIOSH OSHA Booklet 3142 Lead in Construction
5. State Requirements: Washington State Requirements, and/or L&I rules which govern lead paint work or hauling, and disposal include but are not limited to:
   a. WAC 296-62 General Occupational Health Standards
   b. WAC 296-24 Safety Standards for Construction Work
   c. WAC 173-303, 304 Dangerous Waste Regulations, Minimum Functional Standards for Solid Waste Handling
   d. WAC 296-155-176 Occupational Health and Environmental Control; Lead
   e. WAC 296-848 Occupational Health and Environmental Control; Arsenic

1.04 DEFINITIONS

A. Whenever the terms below occur in this Contract Document, they will have the meanings which follow:

1. Action Level (Lead): Employee exposure, without regard to use of respirators, to an air-borne concentration of lead of 30 micrograms per cubic meter of air averaged over an 8-hour period. As used in this section, "30 micrograms per cubic meter of air" refers to the action level for lead.

2. Action Level (Arsenic): Employee exposure, without regard to use of respirators, to an airborne concentration of lead of 5 micrograms per cubic meter of air averaged over an 8-hour period. As used in this section, "5 micrograms per cubic meter of air" refers to the action level for arsenic.
3. Air Monitoring (Lead): The process of measuring the concentration of lead in a specific volume of air in a stated period. Air samples shall be collected and analyzed in accordance with the methods specified by the National Institute for Occupational Safety and Health (NIOSH Method 7105) and as required by WAC-296-155-176.
4. Air Monitoring (Arsenic): The process of measuring the concentration of arsenic in a specific volume of air in a stated period. Air samples shall be collected and analyzed in accordance with the methods specified by the National Institute for Occupational Safety and Health (NIOSH Method 7901) and as required by WAC-296-848.
5. Area Monitoring: Sampling of heavy metal concentrations within the control area, inside the physical boundaries that are representative of the airborne heavy metal concentrations that may reach the breathing zone of personnel potentially exposed to heavy metals.
6. Arsenic: Metallic arsenic and inorganic arsenic compounds. Excluded from this definition are other organic arsenic compounds.
7. Arsenic Permissible Exposure Limit (PEL): Ten micrograms per cubic meter of air as an 8-hour time weighted average.
8. Eight-Hour Time Weighted Average (TWA): Airborne concentration of heavy metals averaged over an 8-hour workday to which an employee is exposed.
9. Heavy metals include any metallic chemical element that has a relatively high density and is toxic or poisonous at low concentrations. Arsenic and lead are heavy metals.
10. Lead: Metallic lead, inorganic lead compounds, and organic lead soaps. Excluded from this definition are other organic lead compounds.
11. Lead Permissible Exposure Limit (PEL): Fifty micrograms per cubic meter of air as an 8-hour time weighted average.
12. Personal Monitoring: Sampling of airborne heavy metal concentrations within the breathing zone of an employee to determine the 8-hour time weighted average concentration in accordance with WAC 296-155-176 and WAC 296-848. Samples shall be Consultant of the employee's work tasks. Breathing zone shall be considered an area within a hemisphere, forward of the shoulders, with a radius of 6 to 9 inches and the center at the nose or mouth of an employee.
13. Industrial Hygienist: The Industrial Hygienist shall be at least one of the following:
    a. Certified by the American Board of Industrial Hygiene and have prior experience in the health and safety aspects of a lead hazard control work project.
    b. A professional engineer or certified safety professional with a minimum of three (3) years prior experience in industrial hygiene relating to lead hazard control work.

1.05 QUALITY ASSURANCE

A. The Contractor shall submit a work plan (pursuant to Paragraph 1.6 A of this Section) if work, other than heavy equipment general building demolition, will impact heavy metal containing materials or if there is a potential for occupational exposure to heavy metals above the action limit. The work plan will demonstrate that abatement, demolition, recycling, and disposal of heavy metal coated and heavy metal containing building materials will be performed in a manner consistent with pertinent federal, state, and local regulation and this specification. The work plan will be submitted to the owner for review prior to the start of any heavy metal related work.

B. The Owner or the Owner’s Consultant will perform periodic observation of the site work to ensure that it is being performed in a manner consistent with the Contractor’s reviewed work plan and this specification.

1.06 SUBMITTALS

A. Contractors shall provide complete submittals as per Section 01 33 00 Submittal Procedures for review by the Owner's representative.

B. Pre-Job Submittals: Heavy Metal Work Plan (General): Provide a site-specific work plan that demonstrates the methods by which handling and disposal of heavy metal containing coatings and building materials will be performed. The Owner realizes that this project may or may not involve actual "heavy metal abatement," instead the project involves demolition of building components that have varying heavy metal concentrations. At a minimum, the work plan shall include:

1. A general description of work practices, engineering controls, air monitoring, and decontamination involving heavy metal containing coatings. Describe whether the job will involve removing lead paint, or demolition of materials containing heavy metals.
2. Qualification / certification / training certificates and role of each contractor's personnel.
3. Qualifications of the proposed testing laboratory (to perform analysis of air and waste characterization samples).
4. Site inspection process logs / documents.
5. Procedures for personnel and equipment cleanup / decontamination.
6. Heavy metal waste management and disposal / recycling plan including waste minimization efforts; container selection and labeling.
7. Qualification / certificates of heavy metal waste transportation subcontractor.
8. Qualification / certification of heavy metal waste disposal / recycle facilities.

C. Construction Phase submittals: Submit the following information daily (at the end of the work shift) to the Owner and Owner's representative or as designated during the pre-construction meeting.

1. Air and bulk sample data sheets and laboratory results including chain of custody and analytical results.
2. Worker Exposure Assessment Reports
   a. Include laboratory analytical testing
   b. Documentation of the work activities included in the worker exposure assessment.
3. Supervisor or Superintendent daily inspection report.
4. Any additional waste characterization testing for waste streams or combination of waste streams other than those including in section 1.2 above.

D. Post Construction Submittals - At the completion of the contract, the Contractor shall provide a report of completion including:

1. All employee exposure monitoring information.
2. Documentation of final heavy metal waste.
3. Documentation of final recycled waste streams.
4. Documentation of final heavy metal waste transportation and disposition
5. Documentation of final recycled waste streams & quantities and locations of recycling facilities.
6. Certification that the work has been completed pursuant to this specification.

PART 2 - PRODUCTS

2.01 EQUIPMENT AND SUPPLIES

A. Provide a list and description of equipment and supplies necessary to support the work as described in the work plan. Equipment and supplies may include but are not limited to:

1. Chemicals to be used on-site including dust suppressants/wetting agents, fuels/lubricants, cleaning degreasing, and/or welding/cutting supplies.
2. Enclosure equipment (for dust control).
3. Fencing, barriers, and signs.
4. Demolition equipment.
5. Materials and debris hauling/moving equipment.
6. Material storage containers and supplies.
7. Decontamination equipment and supplies.
8. Protective clothing and respirators.
9. Labels, manifests, and other shipping documentation.
10. Release prevention equipment.
11. Field documentation logs/supplies; and,
12. Protective clothing, respirators, equipment and supplies necessary to support the work.

PART 3 - EXECUTION

3.01 WORK AREA PREPARATION

A. Perform the following preliminary steps to prepare the Work Areas prior to work impacting heavy metals or heavy metal coated building materials:

1. Establish a Control Area that includes a perimeter sufficient to perform the work around each building or area that contains heavy metals or heavy metal coated building materials. The control area shall also consist of the pathway for transport of any heavy metal contaminated material to a stockpile or storage receptacle if heavy metal containing debris is not immediately transported from the site. Provide and display caution signs, in clearly visible areas, at entrances indicating that hazardous material work is being conducted and that unauthorized persons should not enter. Signs shall be complying with WAC 296-155-176 and WAC 296-848 regulations.
2. Emergency Procedures: Establish and post written emergency procedures within each Work Area, including emergency contact names and contact phone numbers, plans for medical emergencies, temporary loss of electrical power or water, and procedures for an emergency. Contractor is responsible for establishing and posting contingency procedures to all workers on site.
3. Health and Safety Briefing: Conduct a health and safety briefing prior to the start of work and weekly to discuss the health and safety plan, hazardous materials, hazardous work and other related items per the specified health and safety plan. More frequent briefings should be performed as required by project activities or changes in the work.
4. Log-in Sheet: Restrict access to work sites by maintaining a daily log of personnel entering Work Areas; including workers and other authorized personnel and their start/stop times.
5. Decontamination Unit: Prepare the decontamination unit for use at all entrances and exits from the Work Area as described in the approved work plan.

3.02 WORK PROCEDURE

A. General Procedures: Perform all work and comply with the safety and health provisions in the site-specific Health and Safety Plan. The work includes all measures necessary to adequately protect workers, authorized personnel, and the public from heavy metal exposures during abatement and demolition activities.

B. Coordination of Work of all Trades: Coordinate the work of all trades to ensure that work is performed in accordance with the applicable regulations and that the control limits are maintained at all times both inside and outside the control area.

C. Access to Work Area: Access to work areas shall be through decontamination areas. Only the Contractor, subcontractors, authorized Owner personnel, project consultants, and regulatory personnel shall have access to the work area.

D. Means of Egress: Establish and maintain emergency and fire exits from the work area.

E. Always prevent dust generation to the maximum extent practicable. Provide hand wash stations at appropriate and approved locations for the duration of demolition.

F. The use of water shall be restricted to the smallest quantity necessary to minimize dust and to avoid the potential of contaminant migration through run-off or ponding. In no case shall liquids generated during building demolition come into contact with uncontaminated soils, storm drains, surfaces or conduits which may constitute a release to the environment.

G. Demolition Procedures: Perform general demolition or demolition required for hazardous material abatement in areas of lead-containing paints in accordance with approved Health & Safety Plans. Use procedures and equipment required to limit occupational and environmental exposure to heavy metals when heavy metal containing paint is impacted or when building components are demolished. The procedures employed by the Contractor shall not create the potential for contaminating surrounding areas or materials with heavy metal containing coatings or dust. Dust generation shall be kept to a minimum. Dry scraping, dry sanding, or dry grinding on heavy metal containing paints or heavy metal contaminated surfaces will not be permitted without a full enclosure.

H. All heavy metal coated demolition debris shall be handled, stored, and disposed or recycled to meet applicable federal, state, and local requirements.

I. Personnel and equipment decontamination shall occur whenever people or equipment leave the work site as described in the approved work plan. Decontamination waste shall be packaged, stored, labeled, and disposed of according to all applicable requirements at the cost of the Contractor. All contaminated equipment, tools or materials that cannot be decontaminated shall be stored and disposed of by the Contractor in accordance with all federal, state, and local regulations.

J. Grossly inadequate health, safety or environmental precautions on the part of the Contractor or the belief that the Contractor's personnel, the general public or the environment are or may be exposed to an immediate hazard, may be cause for the Owner to suspend the Contractor's site work and ask the Contractor's personnel to evacuate the hazard area. The Contractor shall not be compensated for such delays. The contractor is responsible for costs identified by the Owner as a consequence of the contractor’s actions.

K. The Owner or the Owner’s Consultant may inspect the Contractor's operations and work areas daily for job site cleanliness and conformance with the specifications. The Contractor shall locate any fuels, solvents, or lubricants in a common area in a manner that will prevent releases to the environment. Any hazardous materials shall be appropriately labeled with the generic name of the contents and the Contractor's name.

L. Waste Sampling: Contractor will be required to collect representative samples of demolition debris for analysis as required under WAC 173-303, Dangerous Waste Regulations, to determine appropriate disposal or recycling methods. Select materials that were tested and determined to have lead in the coating for sampling and submittal to an approved laboratory for Toxicity Characteristic Leachate Procedure (TCLP) testing.

3.03 SITE QUALITY CONTROL AND MONITORING

A. Site Inspection: While performing the work, the Contractor may be subject to on-site inspection by L&I/WISHA, OSHA, EPA/Ecology inspectors and/or local building or health officials. If found to be in violation of pertinent regulations, the Contractor shall cease all work immediately until the violation is resolved. Standby time required to resolve the violation shall be at the Contractor's expense. Complete sets of equipment (such as respirators and disposable clothing) that may be required for entry to the control area shall be made available at all times by the Contractor to the Owner and/or agency inspectors for inspection of the control area. Such requests will only be made during working hours.

B. Quality Assurance

1. Restrict the spread of dust and debris from being distributed over the work area.
2. Area air quality monitoring and personnel monitoring shall be conducted throughout the work as appropriate.
3. Air Monitoring: Monitoring of airborne concentrations of heavy metals shall be in accordance with WAC 296-155-176 and WAC 296-848, and as specified herein. Air monitoring, testing, and reporting shall be performed in accordance with an Air Monitoring Plan prepared and signed by the Contractor’s Industrial Hygienist. The plan shall include personal monitoring in accordance with regulatory requirements and area monitoring outside the lead control area.
   a. Submit results of air monitoring samples within 24 hours after the air samples were taken.
   b. Notify the Owner immediately of the corrective action taken if the exposure to heavy metals is at or more than the respective action level outside of the control area.
   c. If the area air monitoring results are above the respective action level, the Owner shall have the option of stopping all work until the work procedures and heavy metal hazard controls are revised to the Owner’s satisfaction.

3.04 CLEAN-UP, TESTING AND DISPOSAL

A. Housekeeping: Housekeeping and clean-up procedures are essential tasks for contamination control. Maintain all surfaces throughout the area free of contaminated debris to the maximum extent practical. Restrict debris from being distributed over the general area. In all possible instances’ workers shall clean-up their own areas. Equip personnel engaged in cleaning up scrap and demolition debris with necessary respiratory equipment and protective clothing.

B. Cleanup: Maintain surfaces of the control area as free of accumulation of heavy metal containing debris and dust as practicable. Restrict the spread of dust and debris; keep waste from being distributed over the work area. The use of compressed air to clean up the area is strictly prohibited. At the end of each shift, clean the area of visible contamination by vacuuming with a HEPA-filtered vacuum cleaner, wet mopping the area, or cleanup by other appropriate means.

C. Testing of Demolition Debris: The Contractor will be required to collect representative sample(s) of the actual demolition debris stream for Toxicity Characteristic Leaching Procedure (TCLP) analysis as required under WAC 173-303, Dangerous Waste Regulations. The Owner’s Consultant reserves the right to review sampling procedures and analytical data before disposal of demolition waste.

D. Disposal of Heavy Metal Demolition Waste: If any heavy metal dangerous waste is identified the following requirements shall be met for the disposal of heavy metal dangerous waste:

1. Collect heavy metal dangerous waste, scrap, debris, bags, containers, equipment, and heavy metal contaminated clothing that may produce airborne concentrations of heavy metal particles. Label the containers in accordance with 29 CFR 1910.1025 and 29 CFR 1910. 1018.

2. Handle, store, transport, and dispose of heavy metals or heavy metal dangerous waste in accordance with 40 CFR 260, 40 CFR 261, 40 CFR 262, 40 CFR 263, 40 CFR 264, 40 CFR 265 and WAC 173-303. Comply with land disposal restriction notification requirements as required by 40 CFR 268.
3. The Transporter and Disposal Facility must each have an EPA identification number. The Contractor shall submit the name, address, and EPA Identification Number of the Transporter and Disposal Site to the Owner prior to the disposal of hazardous waste.

E. Disposal Documentation: Disposal documentation is required for all waste streams. At a minimum, provide a disposal receipt or manifest for all non-dangerous waste streams. For heavy metal dangerous waste, if any is generated, submit written evidence that the hazardous waste treatment, storage, or disposal facility (TSD), or recycling facility is approved for heavy metal dangerous waste disposal or recycling by the EPA and state or local regulatory agencies. Submit one (1) copy of the completed manifest, signed and dated by the initial transporter in accordance with 40 CFR 262. Final payment for the project shall not be made until all disposal documentation has been submitted and accepted by the Owner.

END OF SECTION

SECTION 02 83 00 - LEAD IN CONSTRUCTION

PART 1 - GENERAL

1.01 RELATED WORK DESCRIBED ELSEWHERE

A. The provisions and intent of the contract, including the General Conditions, Special Conditions and General Requirements apply to this work as if specified in this Section. Work related to this Section is described in:

1. Section 02 82 00 – Asbestos Abatement
2. Section 02 84 17 – Universal and other Regulated Waste Activities

1.02 DESCRIPTION OF WORK

A. General work items include, but are not necessarily limited to:

1. No accessible building materials within the project scope are known to contain detectable concentrations of lead at or above and below the United States Department of Housing and Urban Development (HUD) definition of lead-based paint (1.0 milligrams per square centimeter or equal to/greater than 0.5% by weight).
2. There is a potential for exposure to lead and lead dust during asbestos abatement and other restoration work from painted surfaces not accessible to inspectors during the survey.. The Contractor is responsible for monitoring work activities and determining when work involves hazardous materials and conditions that require conformance with specified regulatory requirements. Applicable regulations regarding exposure to lead (WAC 296-155-176) apply to this project.
3. Waste Characterization and Recycling of Demolition Debris is the responsibility of the contractor.
4. See the Limited Hazardous Building Material Surveys – RFM Fire Station 53 Project, and the abatement design drawings HA001 – HA101, prepared by EHS-International for a site summary of the lead containing materials identified within the project scope of work.

1.03 CODES AND REGULATIONS

A. Due to the potential health and environmental hazards associated with the work at this site as described in this section, the work shall be performed in compliance with the applicable provisions of the Washington Industrial Safety and Health Act, and the Washington State Hazardous Waste Management Act, as well as other applicable federal, state, and local codes and regulations governing hazardous materials and hazardous waste. The Contractor is fully responsible for planning and executing all the work under this Contract in a manner that meets or exceeds the requirements of the Washington Administrative Code (WAC 296-62-07521 and WAC 296-155-176) for protecting the health and safety of employees, the public, and for protecting the environment.

B. The following regulations of the U.S. Department of Labor, Occupational Safety and Health Administration (OSHA), the U.S. Environmental Protection Agency (EPA) and applicable requirements of the State of Washington are pertinent to this work. Other applicable regulations not specifically identified herein also apply.

1. United States Department of Labor, Occupational and Health Administration (OSHA):
   a. 29 CFR 1910 Occupational Safety and Health Standards
   b. 29 CFR 1910.134 Respiratory Protection
   c. 29 CFR 1910.1025 Lead
   d. 29 CFR 1910.1200 Hazard Communication
   e. 29 CFR 1910 Safety and Health Regulations for Construction

f. 29 CFR 1926.55 Gases, Vapors, Fumes, Dusts, and Mists
g. 29 CFR 1926.57 Ventilation
h. 29 CFR 1926.62 Lead Exposure in Construction; Interim Rule (with appendices A, B, C, and subpart D)

2. United States Environmental Protection Agency:
   a. 40 CFR 148 Hazardous Waste Injection Restrictions
   b. 40 CFR 260 Hazardous Waste Management Systems: General
   c. 40 CFR 261 Identification and Listing of Hazardous Waste
   d. 40 CFR 262 Standards Applicable to Generators of Hazardous Waste
   e. 40 CFR 263 Standards Applicable to Transporters of Hazardous Waste
   f. 40 CFR 264 Standards for Owners and Operators of Hazardous Waste, Treatment, Storage, and Disposal Facilities
   g. 40 CFR 265 Interim Status Standards for Owners and Operators of Hazardous Waste Treatment, Storage, and Disposal Facilities
   h. 40 CFR 268 Land Disposal Restrictions
   i. 40 CFR 745 Lead; Requirements for Lead-based Paint Activities; Proposed Rule
   j. 49 CFR 172 Hazardous Materials Tables and Hazardous Materials Communications Regulations
   k. 49 CFR 178 Specifications for Packaging
3. National Fire Protection Association (NFPA):
   a. NFPA 701(1996) Methods of Fire Test for Flame-Resistant Textiles and Films
4. National Institute for Occupational Safety and Health (OSHA):
   a. NIOSH OSHA Booklet 3142 Lead in Construction
5. State Requirements: Washington State Requirements, and/or L&I rules which govern lead paint work or hauling, and disposal include but are not limited to:
   a. WAC 296-62 General Occupational Health Standards
   b. WAC 296-24 Safety Standards for Construction Work
   c. WAC 173-303, 304 Dangerous Waste Regulations, Minimum Functional Standards for Solid Waste Handling
   d. WAC 296-155-176 Occupational Health and Environmental Control; Lead

1.04 DEFINITIONS

A. Whenever the terms below occur in this Contract Document, they will have the meanings which follow:
   1. Action Level: Employee exposure, without regard to use of respirators, to an airborne concentration of lead of 30 micrograms per cubic meter of air averaged over an 8-hour period. As used in this section, "30 micrograms per cubic meter of air" refers to the action level.
   2. Air Monitoring: The process of measuring the concentration of lead in a specific volume of air in a stated period. Air samples shall be collected and analyzed in accordance with the methods specified by the National Institute for Occupational Safety and Health (NIOSH Method 7105) and as required by WAC-296-155-176.
   3. Area Monitoring: Sampling of lead concentrations within the lead control area, inside the physical boundaries that are representative of the airborne lead concentrations that may reach the breathing zone of personnel potentially exposed to lead.

4. Eight-Hour Time Weighted Average (TWA): Airborne concentration of lead averaged over an 8-hour workday to which an employee is exposed.
5. Lead: Metallic lead, inorganic lead compounds, and organic lead soaps. Excluded from this definition are other organic lead compounds.
6. Lead Permissible Exposure Limit (PEL): Fifty micrograms per cubic meter of air as an 8-hour time weighted average.
7. Personal Monitoring: Sampling of lead concentrations within the breathing zone of an employee to determine the 8-hour time weighted average concentration in accordance with WAC 296-155-176. Samples shall be Consultant of the employee's work tasks. Breathing zone shall be considered an area within a hemisphere, forward of the shoulders, with a radius of 6 to 9 inches and the center at the nose or mouth of an employee.
8. Industrial Hygienist: The Industrial Hygienist shall be at least one of the following:
   a. Certified by the American Board of Industrial Hygiene and have prior experience in the health and safety aspects of a lead hazard control work project.
   b. A professional engineer or certified safety professional with a minimum of three (3) years prior experience in industrial hygiene relating to lead hazard control work.

1.05 QUALITY ASSURANCE

A. The Contractor shall submit a work plan (pursuant to Paragraph 1.6 A of this Section) if work, other than heavy equipment general building demolition, will impact lead containing materials or if there is a potential for occupational exposure to lead above the action limit. The work plan will demonstrate that abatement, demolition, recycling, and disposal of lead-coated and lead containing building materials will be performed in a manner consistent with pertinent federal, state, and local regulation and this specification. The work plan will be submitted to the owner for review prior to the start of any lead related work.

B. The Owner or the Owner’s Consultant will perform periodic observation of the site work to ensure that it is being performed in a manner consistent with the Contractor’s reviewed work plan and this specification.

1.06 SUBMITTALS

A. Contractors shall provide complete submittals as per Section 01 33 00 Submittal Procedures for review by the Owner’s representative.

B. Pre-Job Submittals: Lead Work Plan (General): Provide a site-specific work plan that demonstrates the methods by which handling and disposal of lead-containing coatings and building materials will be performed. The Owner realizes that this project may or may not involve actual “lead abatement,” instead the project involves demolition of building components that have paint of varying lead concentrations. At a minimum, the work plan shall include:
   1. A general description of work practices, engineering controls, air monitoring, and decontamination involving lead-containing coatings. Describe whether the job will involve removing lead paint, or demolition of materials containing lead.
   2. Qualification / certification / training certificates and role of each contractor’s personnel.
   3. Qualifications of the proposed testing laboratory (to perform analysis of air and waste characterization samples).
   4. Site inspection process logs / documents.
   5. Procedures for personnel and equipment cleanup / decontamination.
   6. Lead waste management and disposal / recycling plan including waste minimization efforts; container selection and labeling.
   7. Qualification / certificates of lead waste transportation subcontractor.
   8. Qualification / certification of lead waste disposal / recycle facilities.

C. Construction Phase submittals: Submit the following information daily (at the end of the work shift) to the Owner and Owner's representative or as designated during the pre-construction meeting.
   1. Air and bulk sample data sheets and laboratory results including chain of custody and analytical results.
   2. Worker Exposure Assessment Reports
      a. Include laboratory analytical testing
      b. Documentation of the work activities included in the worker exposure assessment.
   3. Supervisor or Superintendent daily inspection report.
   4. Any additional waste characterization testing for waste streams or combination of waste streams other than those including in section 1.2 above.

D. Post Construction Submittals - At the completion of the contract, the Contractor shall provide a report of completion including:
   1. All employee exposure monitoring information.
   2. Documentation of final lead waste.
   3. Documentation of final recycled waste streams.
   4. Documentation of final lead waste transportation and disposition
   5. Documentation of final recycled waste streams & quantities and locations of recycling facilities.
   6. Certification that the work has been completed pursuant to this specification.

PART 2 - PRODUCTS

2.01 EQUIPMENT AND SUPPLIES

A. Provide a list and description of equipment and supplies necessary to support the work as described in the work plan. Equipment and supplies may include but are not limited to:
   1. Chemicals to be used on-site including dust suppressants/wetting agents, fuels/lubricants, cleaning degreasing, and/or welding/cutting supplies.
   2. Enclosure equipment (for dust control).
   3. Fencing, barriers, and signs.
   4. Demolition equipment.
   5. Materials and debris hauling/moving equipment.
   6. Material storage containers and supplies.
   7. Decontamination equipment and supplies.
   8. Protective clothing and respirators.
   9. Labels, manifests, and other shipping documentation.
   10. Release prevention equipment.
   11. Field documentation logs/supplies; and,
   12. Protective clothing, respirators, equipment and supplies necessary to support the work.

PART 3 - EXECUTION

3.01 WORK AREA PREPARATION

A. Perform the following preliminary steps to prepare the Work Areas prior to work impacting lead or lead-coated building materials:

1. Establish a Control Area that includes a perimeter sufficient to perform the work around each building or area that contains lead or lead-coated building materials. The control area shall also consist of the pathway for transport of any lead-contaminated material to a stockpile or storage receptacle if lead-containing debris is not immediately transported from the site. Provide and display caution signs, in clearly visible areas, at entrances indicating that hazardous material work is being conducted and that unauthorized persons should not enter. Signs shall be complying with WAC 296-155-176 regulations.
2. Emergency Procedures: Establish and post written emergency procedures within each Work Area, including emergency contact names and contact phone numbers, plans for medical emergencies, temporary loss of electrical power or water, and procedures for an emergency. Contractor is responsible for establishing and posting contingency procedures to all workers on site.
3. Health and Safety Briefing: Conduct a health and safety briefing prior to the start of work and weekly to discuss the health and safety plan, hazardous materials, hazardous work and other related items per the specified health and safety plan. More frequent briefings should be performed as required by project activities or changes in the work.
4. Log-in Sheet: Restrict access to work sites by maintaining a daily log of personnel entering Work Areas; including workers and other authorized personnel and their start/stop times.
5. Decontamination Unit: Prepare the decontamination unit for use at all entrances and exits from the Work Area as described in the approved work plan.

3.02 WORK PROCEDURE

A. General Procedures: Perform all work and comply with the safety and health provisions in the site-specific Health and Safety Plan. The work includes all measures necessary to adequately protect workers, authorized personnel, and the public from lead exposures during abatement and demolition activities.

B. Coordination of Work of all Trades: Coordinate the work of all trades to ensure that work is performed in accordance with the applicable regulations and that the control limits are maintained at all times both inside and outside the control area.

C. Access to Work Area: Access to work areas shall be through decontamination areas. Only the Contractor, subcontractors, authorized Owner personnel, project consultants, and regulatory personnel shall have access to the work area.

D. Means of Egress: Establish and maintain emergency and fire exits from the work area.

E. Always prevent dust generation to the maximum extent practicable. Provide hand wash stations at appropriate and approved locations for the duration of demolition.

F. The use of water shall be restricted to the smallest quantity necessary to minimize dust and to avoid the potential of contaminant migration through run-off or ponding. In no case shall liquids generated during building demolition come into contact with uncontaminated soils, storm drains, surfaces or conduits which may constitute a release to the environment.

G. Demolition Procedures: Perform general demolition or demolition required for hazardous material abatement in areas of lead-containing paints in accordance with approved Health & Safety Plans. Use procedures and equipment required to limit occupational and environmental exposure to lead when lead-containing paint is impacted or when building components are demolished. The procedures employed by the Contractor shall not create the potential for contaminating surrounding areas or materials with lead-containing coatings or dust. Dust generation shall be kept to a minimum. Dry scraping, dry sanding, or dry grinding on lead-containing paints or lead contaminated surfaces will not be permitted without a full enclosure.

H. All lead-coated demolition debris shall be handled, stored, and disposed or recycled to meet applicable federal, state, and local requirements.

I. Personnel and equipment decontamination shall occur whenever people or equipment leave the work site as described in the approved work plan. Decontamination waste shall be packaged, stored, labeled, and disposed of according to all applicable requirements at the cost of the Contractor. All contaminated equipment, tools or materials that cannot be decontaminated shall be stored and disposed of by the Contractor in accordance with all federal, state, and local regulations.

J. Grossly inadequate health, safety or environmental precautions on the part of the Contractor or the belief that the Contractor's personnel, the general public or the environment are or may be exposed to an immediate hazard, may be cause for the Owner to suspend the Contractor's site work and ask the Contractor's personnel to evacuate the hazard area. The Contractor shall not be compensated for such delays. The contractor is responsible for costs identified by the Owner as a consequence of the contractor’s actions.

K. The Owner or the Owner’s Consultant may inspect the Contractor's operations and work areas daily for job site cleanliness and conformance with the specifications. The Contractor shall locate any fuels, solvents, or lubricants in a common area in a manner that will prevent releases to the environment. Any hazardous materials shall be appropriately labeled with the generic name of the contents and the Contractor's name.

L. Waste Sampling: Contractor will be required to collect representative samples of demolition debris for analysis as required under WAC 173-303, Dangerous Waste Regulations, to determine appropriate disposal or recycling methods. Select materials that were tested and determined to have lead in the coating for sampling and submittal to an approved laboratory for Toxicity Characteristic Leachate Procedure (TCLP) testing.

3.03 SITE QUALITY CONTROL AND MONITORING

A. Site Inspection: While performing the work, the Contractor may be subject to on-site inspection by L&I/WISHA, OSHA, EPA/Ecology inspectors and/or local building or health officials. If found to be in violation of pertinent regulations, the Contractor shall cease all work immediately until the violation is resolved. Standby time required to resolve the violation shall be at the Contractor's expense. Complete sets of equipment (such as respirators and disposable clothing) that may be required for entry to the control area shall be made available at all times by the Contractor to the Owner and/or agency inspectors for inspection of the control area. Such requests will only be made during working hours.

B. Quality Assurance

1. Restrict the spread of dust and debris from being distributed over the work area.
2. Area air quality monitoring and personnel monitoring shall be conducted throughout the work as appropriate.
3. Air Monitoring: Monitoring of airborne concentrations of lead shall be in accordance with WAC 296-155-176, and as specified herein. Air monitoring, testing, and reporting shall be performed in accordance with an Air Monitoring Plan prepared and signed by the Contractor’s Industrial Hygienist. The plan shall include personal monitoring in accordance with regulatory requirements and area monitoring outside the lead control area.
   a. Submit results of air monitoring samples within 24 hours after the air samples were taken.
   b. Notify the Owner immediately of the corrective action taken if the exposure to lead is at or more than the action level of 30 micrograms per cubic meter of air outside of the lead control area.

c. If the area air monitoring results are above the action level of 30 micrograms per cubic meter of air, the Owner shall have the option of stopping all work until the work procedures and lead hazard controls are revised to the Owner's satisfaction.

3.04 CLEAN-UP, TESTING AND DISPOSAL

A. Housekeeping: Housekeeping and clean-up procedures are essential tasks for contamination control. Maintain all surfaces throughout the area free of contaminated debris to the maximum extent practical. Restrict debris from being distributed over the general area. In all possible instances' workers shall clean-up their own areas. Equip personnel engaged in cleaning up scrap and demolition debris with necessary respiratory equipment and protective clothing.

B. Cleanup: Maintain surfaces of the lead control area as free of accumulation of paint chips and dust as practicable. Restrict the spread of dust and debris; keep waste from being distributed over the work area. The use of compressed air to clean up the area is strictly prohibited. At the end of each shift, clean the area of visible lead paint contamination by vacuuming with a HEPA-filtered vacuum cleaner, wet mopping the area, or cleanup by other appropriate means.

C. Testing of Demolition Debris: The Contractor will be required to collect representative sample(s) of the actual demolition debris stream for Toxicity Characteristic Leaching Procedure (TCLP) analysis as required under WAC 173-303, Dangerous Waste Regulations. The Owner's Consultant reserves the right to review sampling procedures and analytical data before disposal of demolition waste.

D. Disposal of Lead Demolition Waste: If any lead dangerous waste is identified the following requirements shall be met for the disposal of lead dangerous waste:

1. Collect lead dangerous waste, scrap, debris, bags, containers, equipment, and lead contaminated clothing that may produce airborne concentrations of lead particles. Label the containers in accordance with 29 CFR 1910.1025.
2. Handle, store, transport, and dispose of lead or lead dangerous waste in accordance with 40 CFR 260, 40 CFR 261, 40 CFR 262, 40 CFR 263, 40 CFR 264, 40 CFR 265 and WAC 173-303. Comply with land disposal restriction notification requirements as required by 40 CFR 268.
3. The Transporter and Disposal Facility must each have an EPA identification number. The Contractor shall submit the name, address, and EPA Identification Number of the Transporter and Disposal Site to the Owner prior to the disposal of hazardous waste.

E. Disposal Documentation: Disposal documentation is required for all waste streams. At a minimum, provide a disposal receipt or manifest for all non-dangerous waste streams. For lead dangerous waste, if any is generated, submit written evidence that the hazardous waste treatment, storage, or disposal facility (TSD), or recycling facility is approved for lead dangerous waste disposal or recycling by the EPA and state or local regulatory agencies. Submit one (1) copy of the completed manifest, signed and dated by the initial transporter in accordance with 40 CFR 262. Final payment for the project shall not be made until all disposal documentation has been submitted and accepted by the Owner.

END OF SECTION

SECTION 02 84 17 - UNIVERSAL & OTHER REGULATED WASTE ACTIVITIES

PART 1 - GENERAL

1.01 RELATED WORK DESCRIBED ELSEWHERE

A. The provisions and intent of the contract, including the General Conditions, Special Conditions and General Requirements apply to this work as if specified in this Section. Work related to this Section is described in:

1. Section 02 83 00 – Lead in Construction
2. Section 02 82 00 – Asbestos Abatement

1.02 DESCRIPTION OF WORK

A. The Contractor's employees involved with the removal, handling, transportation, or recycling of fluorescent light tubes, and fluorescent light bulbs, shall receive hazard communication training for mercury in accordance with WAC 296-901-140.

B. The Contractor shall supply all labor, materials, vehicles, services, insurance, special permits, and equipment necessary to remove and recycle fluorescent light tubes and compact fluorescent light bulbs and fixtures. The fluorescent tubes, and compact fluorescent light bulbs shall be packaged and transported to an Owner-approved recycling facility. The Contractor shall carry out the work in accordance with all applicable federal, state, and local regulations.

C. The work specified herein shall be the removal, transportation, and recycling of all fluorescent light tubes, and compact fluorescent light bulbs removed within the project area.

D. The work also includes removing and storing light tubes in a manner not to break tubes while other work is being performed in the area.

E. The work shall be conducted in accordance with all applicable federal, state, and local regulations and these specifications.

F. All required permits, certificates, registrations, or licenses shall be kept valid for the duration of the work addressed by the permit.

G. All shipping/receiving logs shall be legibly filled out in ink.

H. See the Limited Hazardous Building Material Surveys – RFM Fire Station 53 Project, and the abatement design drawings HA001-HA101, prepared by EHS-International for a site summary of the universal wastes and other regulated materials that might need to be removed during the renovation and demolition work.

1.03 REFERENCE STANDARDS

A. General Requirements

1. All work under this Contract shall be done in strict accordance with all applicable regulations, standards and codes governing mercury and in accordance with best available technology and practice. This includes any other work, including trade work conducted in conjunction with the project.

B. Specific Standards

1. The most recent edition of any relevant regulation, standard, document, or code shall be in effect during the work, regardless of the effective date of this specification's governing contract. Where conflict among the requirements or with these specifications exists, the most stringent requirements shall be utilized.
   a. United States Environmental Protection Agency (EPA)
      1) Title 40 Code of Federal Regulations Part 61, Subparts A and M (Revised Subpart B) National Emission Standard for Asbestos.

b. State of Washington Department of Labor & Industries (L&I)
   1) Chapter 296-24 Safety Standards,
   2) Chapter 296-62 Occupational Health and Safety Regulations, including:
   3) Chapter 296-62-071 - Respiratory Protection
   4) Chapter 296-155 Construction Standards
   5) Chapter 296-901-140 Hazard Communication
c. Washington State Department of Ecology (Ecology)
   1) WAC 173-303, Dangerous Waste Regulations
d. Other guidelines, codes, or documents:
   1) United States Department of Transportation (DOT) Hazardous Materials Regulations, Code of Federal Regulations Title 49.

1.04 DEFINITIONS

A. AIHA: American Industrial Hygiene Association
475 Wolf Ledges Parkway
Akron, OH 44311

B. ANSI: American National Standards Institute

C. ASTM: American Society for Testing and Materials

D. Authorized Visitor: Designated representatives of the Contractor, Owner or Owner's representative, and representatives of a regulatory or other agency having jurisdiction over the project.

E. Certified Industrial Hygienist (CIH): An industrial hygienist certified in the Comprehensive Practice of Industrial Hygiene by the American Board of Industrial Hygiene.

F. Ecology: Washington State Department of Ecology

G. EPA: United States Environmental Protection Agency

H. HEPA Filter: A high efficiency particulate air filter capable of removing particles greater than 0.3 microns in diameter with 99.97% efficiency.

I. Lamps: Lamp, also referred to as "universal waste lamp", is defined as the bulb or tube portion of an electric lighting device. A lamp is specifically designed to produce radiant energy, most often in the ultraviolet, visible, and infra-red regions of the electromagnetic spectrum. Examples of common universal waste electric lamps include, but are not limited to, fluorescent, high intensity discharge, neon, mercury vapor, high pressure sodium, and metal halide lamps.

J. L&I: Washington State Department of Labor & Industries
805 Plum Street, S. E. (HC-412)
Olympia, Washington 98504

K. NESHAP: The National Emission Standards for Hazardous Air Pollutants (40 CFR Part 61).

L. NIOSH: The National Institute for Occupational Safety and Health
Building "J" N.E., Room 3007
Atlanta, GA 30333

M. OSHA: The Occupational Safety and Health Administration
200 Constitution Avenue
Washington D.C. 20210

N. Ozone Depleting Substances or Equipment: Equipment containing CFCs or other refrigerants or cooling equipment that may be found throughout the building. Ozone depleting substances should be properly collected and disposed.

O. Polychlorinated Biphenyls (PCBs): PCBs as used in this specification shall mean the same as PCBs, PCB containing lighting ballast, and PCB container, as defined in 40 CFR 761, Section 3, Definitions.

P. Spill: Spill means both intentional and unintentional spills, leaks, and other uncontrolled discharges when the release results in any quantity of PCBs running off or about to run off the external surface of the equipment or other PCB source, as well as the contamination resulting from those releases.

Q. Universal Waste: Universal Waste means any of the following hazardous wastes that are managed under the universal waste requirements 40 CFR 273 and 1910 Subpart H:

1. Batteries as described in Sec. 273.2 of this chapter.
2. Pesticides as described in Sec. 273.3 of this chapter.
3. Thermostats as described in Sec. 273.4 of this chapter; and
4. Lamps as described in Sec. 273.5 of this chapter.
5. Chlorofluorocarbons as described in 1910 subpart H

R. WAC: Washington Administrative Code as enforced by the Washington State Department of Labor and Industries.

S. WISHA: Washington Industrial Safety and Health Act as enforced by the Washington State Department of Labor and Industries.

1.05 SUBMITTALS AND NOTICES

A. Contractors shall provide complete submittals as per Section 01 33 00 Submittal Procedures for review by the Owner's representative.

B. Pre-Construction submittals: Fluorescent Light Tubes, HID Lamps & Mercury Switches Work Plan (General): Include a detailed plan of the procedures proposed for use in complying with the requirements, including the following:

1. Work Area: General description of the preparation of the work area, setting barriers, arrangement for temporary services. Describe procedure for removing tubes, HID lamps, and mercury switches and how they will be packaged for transport offsite.
2. Handling of Tubes: General description of the proposed removal, handling methods, packaging for transport to recycle/disposal facility.
3. Submit name, location, and qualifications of hazardous materials transportation subcontractor.
4. Worker Protection: Description of safeguards to protect workers handling broken/leaking, tubes, bulbs, switches, and cleanup procedures.
5. PPE: Description of personal protective equipment to be worn by contractor's personnel and visitors.
6. Recordkeeping Procedures: For packaging, transportation, and recycling. Labeling procedures for fluorescent tube packaging.
7. Recycling/Disposal Site: Name and location of the recycling site.

C. Post Construction Submittals: PCB Ballasts and mercury-containing fluorescent light tubes, high intensity discharge lighting, and CFC Containing Materials – At the completion of the contract, the Contractor shall provide a report of completion including:

1. Any employee exposure monitoring information.
2. Hazardous waste cleanup information
3. Documentation of appropriate cleanup procedures for broken light tubes and/or leaking PCB ballasts.

4. Recycling certifications and waste manifests listing compact fluorescent bulbs, fluorescent light tubes, HID lighting, etc.
5. Certification that the work has been completed in accordance with the specifications.

1.06 RESPONSIBILITIES

A. Training
1. The Contractor shall be responsible for assuring the following training has been completed prior to the Commencement of Work:
   a. Hazard communication for mercury in accordance WAC 296-901-140
   b. Special on-site training on equipment and procedures unique to this job site shall be performed as required.
   c. Training in emergency response and evacuation procedures.

1.07 PRODUCT DELIVERY, STORAGE AND HANDLING

A. Deliver all materials in good condition in the original packages, containers or bundles visibly / legibly bearing the name of the manufacturer and the brand name of the product.

B. Store all materials in a manner that will prevent their damage or contamination.

C. Damaged, deteriorating or previously used materials shall not be used and shall be removed from the worksite and disposed of properly.

1.08 SITE CONDITIONS

A. The removal area may have electrical transformers and other electrical equipment, domestic water and sewer lines, sprinkler lines, electrical and communication conduit with active wiring, HVAC piping and equipment located in the project area. The Contractor shall verify location of all equipment and protect as required.

PART 2 - PRODUCTS

2.01 PERSONAL PROTECTIVE EQUIPMENT

A. Respiratory Protection: All employees cleaning up broken fluorescent light tubes, HID lamps, mercury switches, or other universal wastes shall be provided with and be required to use adequate and appropriate respiratory protection in accordance with WAC 296-62, Part E.
1. For workers cleaning up broken fluorescent light tubes, HID lamps, and mercury switches, full body disposable protective clothing incorporating head, body and feet covering constructed of material such as Tyvek R (or equivalent) shall be provided in sufficient quantities and adequate sizes to accommodate movement without tearing, to all workers and authorized visitors.

B. Additional safety equipment (e.g., hard hats meeting the requirements of ANSI Standard Z89.1-1981, eye protection meeting the requirements of ANSI Standard Z87.1-1979, safety shoes meeting the requirements of ANSI Standard Z41.1-1967, and disposable gloves) shall be provided as necessary to all workers and authorized visitors and shall be sized to fit the wearer.

2.02 REMOVAL EQUIPMENT

A. A sufficient supply of scaffolds, ladders, lifts, and hand tools (e.g., screwdrivers) shall be provided as needed.

B. Additional support equipment as needed.

2.03 PACKAGING, SUPPLIES AND MATERIALS

A. Fiberglass drums

B. Fluorescent light tube shipping boxes

C. Solvents, wetting solutions, Tyveks, rags etc. as necessary for cleanup of any broken light tubes.

PART 3 - EXECUTION

3.01 WORK PROCEDURE

A. Furnish labor, materials, services, and equipment necessary for the removal of PCB containing lighting ballasts, associated mercury-containing fluorescent lamps, and high intensity discharge (HID) lamps in accordance with local, state, or federal regulations. Do not expose PCBs to open flames or other high temperature sources since toxic decomposition by-products may be produced. Do not break mercury containing fluorescent lamps or high intensity discharge lamps.

B. Work Operations

1. Ensure that work operations or processes involving PCB or PCB-contaminated materials are conducted in accordance with 40 CFR 761, 40 CFR 262 40 CFR 263, and the applicable requirements of this section, including but not limited to:
   a. Obtaining suitable PCB and mercury-containing lamp storage sites.
   b. Notifying Owner or owner's representative prior to commencing the operation.
   c. Reporting leaks and spills to the Owner or owner's representative.
   d. Cleaning up spills.
   e. Inspecting PCB and PCB-contaminated items and waste containers for leaks and forwarding copies of inspection reports to the Owner or owner's representative.
   f. Maintaining inspection, inventory, and spill records.
   g. Ensuring that CFCs are recovered and disposed of by a qualified person.

3.02 PCB SPILL CLEANUP REQUIREMENTS

A. PCB Spills

1. Immediately report to the Owner or owner's representative any PCB spills.

B. PCB Spill Control Area

1. Rope off an area around the edges of a PCB leak or spill and post a "PCB Spill Authorized Personnel Only" caution sign. Immediately transfer leaking items to a drip pan or other container.

C. PCB Spill Cleanup

1. 40 CFR 761, subpart G. Initiate cleanup of spills as soon as possible, but no later than 24 hours of its discovery. Mop up the liquid with rags or other conventional absorbent. The spent absorbent shall be properly contained and disposed of as solid PCB waste.

D. Records and Certification

1. Document the cleanup with records of decontamination in accordance with 40 CFR 761, Section 125, Requirements for PCB Spill Cleanup. Provide test results of cleanup and certification of decontamination.

3.03 REMOVAL

A. Ballasts

1. As ballast are removed from the lighting fixture, inspect label on ballast. Ballasts without a "No PCB" label shall be assumed to contain PCBs and containerized and disposed of as required under paragraphs STORAGE FOR DISPOSAL and DISPOSAL.

B. Lighting Lamps

1. Remove lighting tubes/lamps from the lighting fixture and carefully place (unbroken) into appropriate containers (original transport boxes or equivalent). In the event of a lighting tube/lamp breaking, sweep and place waste in double plastic taped bags and dispose of as universal waste as specified herein.

3.04 STORAGE FOR DISPOSAL

A. Storage Containers for PCBs
   1. 49 CFR 178. Store PCB in containers approved by DOT for PCB.

B. Storage Containers for lamps
   1. Store mercury containing lamps in appropriate DOT containers. The boxes shall be stored and labeled for transport in accordance with 40 CFR 273.

C. Labeling of Waste Containers
   1. Label with the following:
      a. Date the item was placed in storage and the name of the cognizant activity/building.
      b. "Caution Contains PCB," conforming to 40 CFR 761, CFR Subpart C. Affix labels to PCB waste containers.
      c. Label mercury-containing lamp waste in accordance with 40 CFR 273. Affix labels to all lighting waste containers.

3.05 DISPOSAL

A. Dispose of universal wastes including PCB and mercury waste in accordance with EPA, DOT, and local regulations at a permitted site.

B. Identification Number
   1. Federal regulations 40 CFR 761, and 40 CFR 263 require that generators, transporters, commercial storers, and disposers of PCB waste possess U.S. EPA identification numbers. The contractor shall verify that the activity has a U.S. EPA generator identification number for use on the Uniform Hazardous Waste manifest. If not, the contractor shall advise the activity that it must file and obtain an I.D. number with EPA prior to commencement of removal work. For mercury containing lamp removal, Federal regulations 40 CFR 273 require that large quantity handlers of Universal waste (LQHUW) must provide notification of universal waste management to the appropriate EPA Region (or state director in authorized states), obtain an EPA identification number, and retain for three years records of off-site shipments of universal waste. The contractor shall verify that the activity has a U.S. EPA generator identification number for use on the Universal Waste manifest. If not, the contractor shall advise the activity that it must file and obtain an I.D. number with EPA prior to commencement of removal work.

C. Transporter Certification
   1. Comply with disposal and transportation requirements outlined in 40 CFR 761 and 40 CFR 263. Before transporting the PCB waste, sign, and date the manifest acknowledging acceptance of the PCB waste from the Owner or Owner's representative. Return a signed copy to the Owner or Owner's representative before leaving the job site. Ensure that the manifest always accompanies the PCB waste. Submit transporter certification of notification to EPA of their PCB waste activities (EPA Form 7710-53).
   2. Certificate of Disposal and/or Recycling
      a. 40 CFR 761. Certificate for the PCBs and PCB items disposed shall include:
         1) The identity of the disposal and or recycling facility, by name, address, and EPA identification number.
         2) The identity of the PCB waste affected by the Certificate of Disposal including reference to the manifest number for the shipment.

3) A statement certifying the fact of disposal and or recycling of the identified PCB waste, including the date(s) of disposal, and identifying the disposal process used.
4) A certification as defined in 40 CFR 761.

END OF SECTION

SECTION 033000 - CAST-IN-PLACE CONCRETE

PART 1 GENERAL

1.1 SUMMARY

A. Section includes cast-in-place concrete, including formwork, reinforcement, concrete materials, mixture design, placement procedures, and finishes.

1.2 DEFINITIONS

A. Cementitious Materials: Portland cement alone or in combination with one or more of the following: blended hydraulic cement, fly ash, slag cement, other pozzolans, and silica fume; materials subject to compliance with requirements.

1.3 ACTION SUBMITTALS

A. Product Data: For each type of product.
   1. For curing compounds, provide data on method removal in even of incompatibility with floor covering adhesives.

B. Design Mixtures: For each concrete mixture. Submit alternate design mixtures when characteristics of materials, Project conditions, weather, test results, or other circumstances warrant adjustments.
   1. Indicate proposed mix design complies with requirements of ACI 301, Section 4 - Concrete Mixtures.
   2. Indicate proposed mix design complies with requirements of ACI 318, Chapter 5 - Concrete Quality, Mixing and Placing.
   3. Indicate amounts of mixing water to be withheld for later addition at Project site.

C. Steel Reinforcement Shop Drawings: Placing Drawings that detail fabrication, bending, and placement. Include bar sizes, lengths, material, grade, bar schedules, stirrup spacing, bent bar diagrams, bar arrangement, splices and laps, mechanical connections, tie spacing, hoop spacing, and supports for concrete reinforcement. See drawings for additional requirements.

D. Construction Joint Layout: Indicate proposed construction joints required to construct the structure.
   1. Location of construction joints is subject to approval of the Architect.

E. Samples: For waterstops and vapor retarder.

F. Test Reports: For each test or series of tests specified.

1.4 INFORMATIONAL SUBMITTALS

A. Qualification Data: For Installer, manufacturer, and testing agency.

1.5 QUALITY ASSURANCE

A. Installer Qualifications: A qualified installer who employs on Project personnel qualified as ACI-certified Flatwork Technician and Finisher and a supervisor who is an ACI-certified Concrete Flatwork Technician.

B. Manufacturer Qualifications: A firm experienced in manufacturing ready-mixed concrete products and that complies with ASTM C94/C94M requirements for production facilities and equipment.
   1. Manufacturer certified according to NRMCA's "Certification of Ready Mixed Concrete Production Facilities."

C. Testing Agency Qualifications: An independent agency, acceptable to authorities having jurisdiction, qualified according to ASTM C1077 and ASTM E329 for testing indicated.
   1. Personnel conducting field tests shall be qualified as ACI Concrete Field Testing Technician, Grade 1, according to ACI CP-1 or an equivalent certification program.
   2. Personnel performing laboratory tests shall be ACI-certified Concrete Strength Testing Technician and Concrete Laboratory Testing Technician, Grade I. Testing agency laboratory supervisor shall be an ACI-certified Concrete Laboratory Testing Technician, Grade II.

D. Source Limitations: Obtain each type or class of cementitious material of the same brand from the same manufacturer's plant, obtain aggregate from single source, and obtain admixtures from single manufacturer.
E. ACI Publications: Comply with the following unless modified by requirements in the Contract Documents:
   1. ACI 301, "Specifications for Structural Concrete", Sections 1 through 5
   2. ACI 117, "Specifications for Tolerances for Concrete Construction and Materials"
   3. ACI 318, "Building Code Requirements for Structural Concrete
   4. ACI 304, "Guide for Measuring, Mixing, Transporting, and Placing Concrete
   5. ACI 305R, "Guide to Hot Weather Concreting"
   6. ACI 306R, "Guide to Cold weather Concreting"
   7. ACI 311, "Guide for Concrete Inspection
F. Concrete Testing Service: Owner will engage a qualified independent testing agency to perform material evaluation tests and to design concrete mixtures.
G. Preinstallation Conference: Conduct conference at Project site.
   1. Before submitting design mixtures, review concrete design mixture and examine procedures for ensuring quality of concrete materials. Require representatives of each entity directly concerned with cast-in-place concrete to attend, including the following:
      a. Contractor's superintendent.
      b. Independent testing agency responsible for concrete design mixtures.
      c. Ready-mix concrete manufacturer.
      d. Concrete Subcontractor.
      e. Special concrete finish Subcontractor.
   2. Review special inspection and testing and inspecting agency procedures for field quality control, concrete finishes and finishing, cold- and hot-weather concreting procedures, curing procedures, construction contraction and isolation joints, and joint-filler strips, semirigid joint fillers, forms and form removal limitations, shoring and reshoring procedures, vapor-retarder installation, anchor rod and anchorage device installation tolerances, steel reinforcement installation, methods for achieving specified floor and slab flatness and levelness floor and slab flatness and levelness measurement, concrete repair procedures, and concrete protection.

1.6 DELIVERY, STORAGE, AND HANDLING
A. Steel Reinforcement: Deliver, store, and handle steel reinforcement to prevent bending and damage.

PART 2 PRODUCTS

2.1 FORM-FACING MATERIALS
A. Smooth-Formed Finished Concrete: Form-facing panels that provide continuous, true, and smooth concrete surfaces. Furnish in largest practicable sizes to minimize number of joints.
   1. Plywood, metal, or other approved panel materials.
   2. Exterior-grade plywood panels, suitable for concrete forms, complying with DOC PS 1, and as follows:
      a. High-density overlay, Class 1 or better.
      b. Medium-density overlay, Class 1 or better; mill-release agent treated and edge sealed.
      c. Structural 1, B-B or better; mill oiled and edge sealed.
      d. B-B (Concrete Form), Class 1 or better; mill oiled and edge sealed.
   3. Overlaid Finish birch plywood.
B. Rough-Formed Finished Concrete: Plywood, lumber, metal, or another approved material. Provide lumber dressed on at least two edges and one side for tight fit.

C. Void Forms: Biodegradable paper surface, treated for moisture resistance, structurally sufficient to support weight of plastic concrete and other superimposed loads.
D. Chamfer Strips: Wood, metal, PVC, or rubber strips, 3/4 by 3/4 inch, minimum.
E. Rustication Strips: Wood, metal, PVC, or rubber strips, kerfed for ease of form removal.
F. Form-Release Agent: Commercially formulated form-release agent that does not bond with, stain, or adversely affect concrete surfaces and does not impair subsequent treatments of concrete surfaces.
    1. Formulate form-release agent with rust inhibitor for steel form-facing materials.
G. Form Ties: Factory-fabricated, removable or snap-off glass-fiber-reinforced plastic or metal form ties designed to resist lateral pressure of fresh concrete on forms and to prevent spalling of concrete on removal.
    1. Furnish units that leave no corrodible metal closer than 1 inch to the plane of exposed concrete surface.
    2. Furnish ties that, when removed, leave holes no larger than 1 inch in diameter in concrete surface.
    3. Furnish ties with integral water-barrier plates to walls indicated to receive dampproofing or waterproofing.

2.2 STEEL REINFORCEMENT
A. As indicated in the drawings.

2.3 REINFORCEMENT ACCESSORIES
A. Bar Supports: Bolsters, chairs, spacers, and other devices for spacing, supporting, and fastening reinforcing bars and welded-wire reinforcement in place. Manufacture bar supports from steel wire, plastic, or precast concrete according to CRSI's "Manual of Standard Practice," of greater compressive strength than concrete and as follows:
    1. For concrete surfaces exposed to view, where legs of wire bar supports contact forms, use CRSI Class 1 plastic-protected steel wire or CRSI Class 2 stainless-steel bar supports.
B. Tie Wire: Annealed, minimum 16 gauge, 0.0508 inch (1.29 mm).

2.4 CONCRETE MATERIALS
A. Source Limitations: Obtain each type or class of cementitious material of the same brand from the same manufacturer's plant, obtain aggregate from single source, and obtain admixtures from single source from single manufacturer.
B. Cementitious Materials:
    1. Portland Cement: ASTM C150/C150M, Type I/II gray.
C. Normal-Weight Aggregates: ASTM C33/C33M, Class 3M coarse aggregate or better, graded. Provide aggregates from a single source with documented service record data of at least 10 years' satisfactory service in similar applications and service conditions using similar aggregates and cementitious materials.
    1. Maximum Coarse-Aggregate Size: 3/4 inch nominal.
    2. Fine Aggregate: Free of materials with deleterious reactivity to alkali in cement.
D. Water: ASTM C94/C94M.
E. Silica Fume: ASTM C1240, proportioned in accordance with ACI 211.1

2.5 ADMIXTURES
A. Air-Entraining Admixture: ASTM C260. Slab-on-grade concrete shall include BASF Rheomix 235 Waterproofing Admixture or approved alternate. See structural notes.
B. Set-Accelerating Corrosion-Inhibiting Admixture: Commercially formulated, anodic inhibitor or mixed cathodic and anodic inhibitor; capable of forming a protective barrier and minimizing chloride reactions with steel reinforcement in concrete and complying with ASTM C494/C494M, Type C.

C. Chemical Admixture: Shall be compatible with other admixtures and cementitious materials. Do not use admixtures containing calcium chloride. Do not use chemicals that will result in soluble chloride ions in excess of 0.1 percent by weight of cement.
D. Shrinkage Reducing Admixture: ASTM C494, Type S.
E. Water Reducing Admixture: ASTM C494 Type A.

2.6 VAPOR RETARDERS
A. Plastic Vapor Retarder: ASTM E1745, Class A. Include manufacturer's recommended adhesive or pressure-sensitive tape.
1. Products:
a. Fortifiber Corporation; Moistop Ultra 15.
b. Raven Industries Inc.; Vapor Block 15.
c. Stego Industries, LLC.; Stego Wrap, 15 mils.
B. Granular Fill: Clean mixture of crushed stone or crushed or uncrushed gravel; ASTM D448, Size 57, with 100 percent passing a 1-1/2" sieve and 0 to 5 percent passing a No. 8 sieve.

2.7 CURING AND SEALING MATERIALS
A. Water: Potable.
B. Clear, Waterborne, Membrane-Forming Curing Compound: ASTM C1315, Type 1, Class A.
C. Basis of Design: Dayton Superior; Cure and Seal 25% J22UV, or equal approved by Architect.

2.8 RELATED MATERIALS
A. Expansion- and Isolation-Joint-Filler Strips: ASTM D1751, asphalt-saturated cellulosic fiber or ASTM D1752, cork or self-expanding cork.
B. Semirigid Joint Filler: Two-component, semirigid, 100 percent solids, epoxy resin with a Type A shore durometer hardness of 80 per according to ASTM D2240.
C. Bonding Agent: ASTM C1059/C1059M, Type II, non-redispersible, acrylic emulsion or styrene butadiene. See structural notes.
D. Epoxy Bonding Adhesive: ASTM C881/C881M, two-component epoxy resin, capable of humid curing and bonding to damp surfaces, of class suitable for application temperature and of grade to suit requirements, and as follows:
1. Types IV and V, load bearing, for bonding hardened or freshly mixed concrete to hardened concrete.
E. Reglets: Fabricate reglets of not less than 0.022-inch-thick, galvanized-steel sheet. Temporarily fill or cover face opening of reglet to prevent intrusion of concrete or debris.

2.9 NON-SHRINK CEMENTITIOUS GROUT: PREMIXED COMPOUND CONSISTING OF NON-METALLIC AGGREGATE, CEMENT, WATER REDUCING AND PLASTICIZING AGENTS.
A. Grout: Comply with ASTM C1107/C1107M
B. Minimum Compressive Strength at 48 Hours, ASTM C109/C109M: 2000 pounds per square inch (13.7 MPa)
C. Minimum Compressive Strength at 28 Days: 7000 pounds per square inch (48 MPa). Products containing aluminum powder are not permitted.

2.10 REPAIR MATERIALS
A. Repair Underlayment: Cement-based, polymer-modified, self-leveling product that can be applied in thicknesses from 1/8 inch and that can be feathered at edges to match adjacent floor elevations.
1. Cement Binder: ASTM C150/C150M, portland cement or hydraulic or blended hydraulic cement as defined in ASTM C 219.
2. Primer: Product of underlayment manufacturer recommended for substrate, conditions, and application.
3. Aggregate: Well-graded, washed gravel, 1/8 to 1/4 inch or coarse sand as recommended by underlayment manufacturer.

4. Compressive Strength: Not less than 4100 psi at 28 days when tested according to ASTM C109/C109M.

B. Repair Overlayment: Cement-based, polymer-modified, self-leveling product that can be applied in thicknesses from 1/4 inch and that can be filled in over a scarified surface to match adjacent floor elevations.
   1. Cement Binder: ASTM C150/C150M, portland cement or hydraulic or blended hydraulic cement as defined in ASTM C 219.
   2. Primer: Product of topping manufacturer recommended for substrate, conditions, and application.
   3. Aggregate: Well-graded, washed gravel, 1/8 to 1/4 inch or coarse sand as recommended by topping manufacturer.
   4. Compressive Strength: Not less than 5000 psi at 28 days when tested according to ASTM C109/C109M.

2.11 CONCRETE MIXTURES, GENERAL

A. Prepare design mixtures for each type and strength of concrete, proportioned on the basis of laboratory trial mixture or field test data, or both, according to ACI 301 (ACI 301M).
   1. Use a qualified independent testing agency for preparing and reporting proposed mixture designs based on laboratory trial mixtures.

B. Cementitious Materials: Limit percentage, by weight, of cementitious materials other than portland cement in concrete as follows:
   1. Fly Ash: 25 percent.
   2. Combined Fly Ash and Pozzolan: 25 percent.
   3. Slag Cement: 25 percent.
   4. Combined Fly Ash or Pozzolan and Slag Cement: 25 percent.
   5. Silica Fume: 10 percent.
   6. Combined Fly Ash, Pozzolans, and Silica Fume: 25 percent
   7. Combined Fly Ash or Pozzolans, Slag Cement, and Silica Fume: 25 percent

C. Limit water-soluble, chloride-ion content in hardened concrete to 0.06

D. Admixtures: Use admixtures according to manufacturer's written instructions.
   1. Use water-reducing, high-range water-reducing, or plasticizing admixture in concrete, as required, for placement and workability.
   2. Use water-reducing and -retarding admixture when required by high temperatures, low humidity, or other adverse placement conditions.
   3. Use water-reducing admixture in pumped concrete, concrete for heavy-use industrial slabs and parking structure slabs, concrete required to be watertight, and concrete with a w/c ratio below 0.50.

E. Color Pigment: Add color pigment to concrete mixture according to manufacturer's written instructions and to result in hardened concrete color consistent with approved mockup.

2.12 FABRICATING REINFORCEMENT

A. Fabricate steel reinforcement according to CRSI's "Manual of Standard Practice."

2.13 CONCRETE MIXING

A. Ready-Mixed Concrete: Measure, batch, mix, and deliver concrete according to ASTM C94/C94M and ASTM C1116/C1116M, and furnish batch ticket information.
   1. When air temperature is between 85 and 90 deg F, reduce mixing and delivery time from 1-1/2 hours to 75 minutes; when air temperature is above 90 deg F, reduce mixing and delivery time to 60 minutes.

B. Project-Site Mixing: Measure, batch, and mix concrete materials and concrete according to ASTM C94/C94M. Mix concrete materials in appropriate drum-type batch machine mixer.
   1. For mixer capacity of 1 cu. yd. or smaller, continue mixing at least 1-1/2 minutes, but not more than 5 minutes after ingredients are in mixer, before any part of batch is released.

2. For mixer capacity larger than 1 cu. yd., increase mixing time by 15 seconds for each additional 1 cu. yd.
3. Provide batch ticket for each batch discharged and used in the Work, indicating Project identification name and number, date, mixture type, mixture time, quantity, and amount of water added. Record approximate location of final deposit in structure.

PART 3 EXECUTION

3.1 FORMWORK INSTALLATION

A. Design, erect, shore, brace, and maintain formwork, according to ACI 301 (ACI 301M), to support vertical, lateral, static, and dynamic loads, and construction loads that might be applied, until structure can support such loads.
B. Construct formwork so concrete members and structures are of size, shape, alignment, elevation, and position indicated, within tolerance limits of ACI 117 (ACI 117M).
C. Limit concrete surface irregularities, designated by ACI 347 as abrupt or gradual, as follows:
   1. Class A, 1/8 inch for smooth-formed finished surfaces.
   2. Class B, 1/4 inch for rough-formed finished surfaces.
D. Construct forms tight enough to prevent loss of concrete mortar.
E. Construct forms for easy removal without hammering or prying against concrete surfaces. Provide crush or wrecking plates where stripping may damage cast-concrete surfaces. Provide top forms for inclined surfaces steeper than 1.5 horizontal to 1 vertical.
   1. Install keyways, reglets, recesses, and the like, for easy removal.
   2. Do not use rust-stained steel form-facing material.
F. Set edge forms, bulkheads, and intermediate screed strips for slabs to achieve required elevations and slopes in finished concrete surfaces. Provide and secure units to support screed strips; use strike-off templates or compacting-type screeds.
G. Provide temporary openings for cleanouts and inspection ports where interior area of formwork is inaccessible. Close openings with panels tightly fitted to forms and securely braced to prevent loss of concrete mortar. Locate temporary openings in forms at inconspicuous locations.
H. Do not chamfer exterior corners and edges of permanently exposed concrete.
I. Form openings, chases, offsets, sinkages, keyways, reglets, blocking, screeds, and bulkheads required in the Work. Determine sizes and locations from trades providing such items.
J. Clean forms and adjacent surfaces to receive concrete. Remove chips, wood, sawdust, dirt, and other debris just before placing concrete.
K. Retighten forms and bracing before placing concrete, as required, to prevent mortar leaks and maintain proper alignment.
L. Coat contact surfaces of forms with form-release agent, according to manufacturer's written instructions, before placing reinforcement.

3.2 EMBEDDED ITEM INSTALLATION

A. Place and secure anchorage devices and other embedded items required for adjoining work that is attached to or supported by cast-in-place concrete. Use setting drawings, templates, diagrams, instructions, and directions furnished with items to be embedded.
   1. Install anchor rods, accurately located, to elevations required and complying with tolerances in Section 7.5 of AISC's "Code of Standard Practice for Steel Buildings and Bridges"
   2. See structural notes for additional requirements.

3.3 REMOVING AND REUSING FORMS

A. General: Formwork for sides of beams, walls, columns, and similar parts of the Work that do not support weight of concrete may be removed after cumulatively curing at not less than 50 deg F for 24hours after placing concrete. Concrete has to be hard enough to not be damaged by form-removal operations, and curing and protection operations need to be maintained.

1. Leave formwork for beam soffits, joists, slabs, and other structural elements that support weight of concrete in place until concrete has achieved at least 70 percent of its 28-day design compressive strength.
2. Remove forms only if shores have been arranged to permit removal of forms without loosening or disturbing shores.

B. Clean and repair surfaces of forms to be reused in the Work. Split, frayed, delaminated, or otherwise damaged form-facing material are not acceptable for exposed surfaces. Apply new form-release agent.

C. When forms are reused, clean surfaces, remove fins and laitance, and tighten to close joints. Align and secure joints to avoid offsets. Do not use patched forms for exposed concrete surfaces unless approved by Architect.

3.4 VAPOR-RETARDER INSTALLATION

A. Under slab on grade Sheet Vapor Retarders: Place, protect, and repair sheet vapor retarder according to ASTM E1643 and manufacturer's written instructions.

1. Lap joints 6 inches and seal with manufacturer's recommended tape.

3.5 STEEL REINFORCEMENT INSTALLATION

A. General: Comply with CRSI's "Manual of Standard Practice" for fabricating, placing, and supporting reinforcement.

1. Do not cut or puncture vapor retarder. Repair damage and reseal vapor retarder before placing concrete.

B. Comply with requirements of ACI 301.

C. Clean reinforcement of loose rust and mill scale, earth, ice, and other foreign materials that reduce bond to concrete.

D. Accurately position, support, and secure reinforcement against displacement. Locate and support reinforcement with bar supports to maintain minimum concrete cover. Do not tack weld crossing reinforcing bars.

E. Set wire ties with ends directed into concrete, not toward exposed concrete surfaces.

3.6 JOINTS

A. General: Construct joints true to line with faces perpendicular to surface plane of concrete.

B. Construction Joints: Install so strength and appearance of concrete are not impaired, at locations indicated or as approved by Architect.

1. Place joints perpendicular to main reinforcement. Continue reinforcement across construction joints unless otherwise indicated. Do not continue reinforcement through sides of strip placements of floors and slabs.
2. Form keyed joints as indicated. Embed keys at least 1-1/2 inches into concrete.

C. Contraction Joints in Slabs-on-Grade: Form weakened-plane contraction joints, sectioning concrete into areas as indicated. Construct contraction joints for a depth equal to at least one-fourth of concrete thickness as follows:

1. Sawed Joints: Form contraction joints with power saws equipped with shatterproof abrasive or diamond-rimmed blades. Cut 1/8-inch-wide joints into concrete when cutting action does not tear, abrade, or otherwise damage surface and before concrete develops random contraction cracks.

3.7 CONCRETE PLACEMENT

A. Before placing concrete, verify that installation of formwork, reinforcement, and embedded items is complete and that required inspections are completed.

B. Notify architect not less than 48 hours prior to commencement of placement operations.

C. Do not add water to concrete during delivery, at Project site, or during placement unless approved by Architect.

D. Deposit concrete continuously in one layer or in horizontal layers of such thickness that no new concrete is placed on concrete that has hardened enough to cause seams or planes of

weakness. If a section cannot be placed continuously, provide construction joints as indicated. Deposit concrete to avoid segregation.

1. Deposit concrete in horizontal layers of depth not to exceed formwork design pressures and in a manner to avoid inclined construction joints.
2. Consolidate placed concrete with mechanical vibrating equipment according to ACI 301 (ACI 301M).
3. Do not use vibrators to transport concrete inside forms. Insert and withdraw vibrators vertically at uniformly spaced locations to rapidly penetrate placed layer and at least 6 inches into preceding layer. Do not insert vibrators into lower layers of concrete that have begun to lose plasticity. At each insertion, limit duration of vibration to time necessary to consolidate concrete and complete embedment of reinforcement and other embedded items without causing mixture constituents to segregate.

E. Deposit and consolidate concrete for floors and slabs in a continuous operation, within limits of construction joints, until placement of a panel or section is complete.

1. Consolidate concrete during placement operations, so concrete is thoroughly worked around reinforcement and other embedded items and into corners.
2. Maintain reinforcement in position on chairs during concrete placement.
3. Screed slab surfaces with a straightedge and strike off to correct elevations.
4. Slope surfaces uniformly to drains where required.
5. Begin initial floating using bull floats or darbies to form a uniform and open-textured surface plane, before excess bleedwater appears on the surface. Do not further disturb slab surfaces before starting finishing operations.

F. Cold-Weather Placement: Comply with ACI 306.1; with structural notes, and as follows: Protect concrete work from physical damage or reduced strength that could be caused by frost, freezing actions, or low temperatures.

1. When average high and low temperature is expected to fall below 40 deg F for three successive days, maintain delivered concrete mixture temperature within the temperature range required by ACI 301.
2. Do not use frozen materials or materials containing ice or snow. Do not place concrete on frozen subgrade or on subgrade containing frozen materials.
3. Do not use calcium chloride, salt, or other materials containing antifreeze agents or chemical accelerators unless otherwise specified and approved in mixture designs.

G. Hot-Weather Placement: Comply with ACI 301; with structural notes, and as follows:

1. Maintain concrete temperature below 90 deg F at time of placement. Chilled mixing water or chopped ice is calculated to total amount of mixing water. Using liquid nitrogen to cool concrete is Contractor's option.
2. Fog-spray forms, steel reinforcement, and subgrade just before placing concrete. Keep subgrade uniformly moist without standing water, soft spots, or dry areas.

3.8 FINISHING FORMED SURFACES

A. Rough-Formed Finish: As-cast concrete texture imparted by form-facing material with tie holes and defects repaired and patched. Remove fins and other projections that exceed specified limits on formed-surface irregularities.

1. Apply to concrete surfaces [not exposed to public view] [Insert locations].

B. Smooth-Formed Finish: As-cast concrete texture imparted by form-facing material, arranged in an orderly and symmetrical manner with a minimum of seams. Repair and patch tie holes and defects. Remove fins and other projections that exceed specified limits on formed-surface irregularities.

1. Apply to concrete surfaces [exposed to public view,] [to receive a rubbed finish,] [or to be covered with a coating or covering material applied directly to concrete] [Insert locations].

C. Related Unformed Surfaces: At tops of walls, horizontal offsets, and similar unformed surfaces adjacent to formed surfaces, strike off smooth and finish with a texture matching adjacent formed surfaces. Continue final surface treatment of formed surfaces uniformly across adjacent unformed surfaces unless otherwise indicated.

3.9 FINISHING FLOORS AND SLABS

A. General: Comply with ACI 302.1R recommendations for screeding, restraightening, and finishing operations for concrete surfaces. Do not wet concrete surfaces.

B. Float Finish: Consolidate surface with power-driven floats or by hand floating if area is small or inaccessible to power-driven floats. Restraighten, cut down high spots, and fill low spots. Repeat float passes and restraightening until surface is left with a uniform, smooth, granular texture.

1. Apply a trowel finish to surfaces exposed to view or to be covered with resilient flooring, carpet, ceramic or quarry tile set over a cleavage membrane, paint or another thin-film-finish coating system.

C. Broom Finish: Apply a broom finish to exterior concrete platforms, steps, ramps, and elsewhere as indicated.

1. Immediately after float finishing, slightly roughen trafficked surface by brooming with fiber-bristle broom perpendicular to main traffic route. Coordinate required final finish with Architect before application.

3.10 MISCELLANEOUS CONCRETE ITEM INSTALLATION

A. Filling In: Fill in holes and openings left in concrete structures after work of other trades is in place unless otherwise indicated. Mix, place, and cure concrete, as specified, to blend with in-place construction. Provide other miscellaneous concrete filling indicated or required to complete the Work.

B. Equipment Bases and Foundations: Provide machine and equipment bases and foundations as shown on Drawings. Set anchor bolts for machines and equipment at correct elevations, complying with diagrams or templates from manufacturer furnishing machines and equipment.

3.11 CONCRETE PROTECTING AND CURING

A. General: Protect freshly placed concrete from premature drying and excessive cold or hot temperatures. Comply with ACI 306.1 for cold-weather protection and ACI 305.1 (ACI 305.1M) for hot-weather protection during curing.

B. Evaporation Retarder: Apply evaporation retarder to unformed concrete surfaces if hot, dry, or windy conditions cause moisture loss approaching 0.2 lb/sq. ft. x h before and during finishing operations. Apply according to manufacturer's written instructions after placing, screeding, and bull floating or darbying concrete, but before float finishing.

C. Formed Surfaces: Cure formed concrete surfaces, including underside of beams, supported slabs, and other similar surfaces. If forms remain during curing period, moist cure after loosening forms. If removing forms before end of curing period, continue curing for remainder of curing period.

D. Unformed Surfaces: Begin curing immediately after finishing concrete. Cure unformed surfaces, including floors and slabs, concrete floor toppings, and other surfaces.

E. Horizontal Slabs: Cure concrete according to ACI 308.1, by one or a combination of the following methods:

1. Curing and Sealing Compound: Apply uniformly to floors and slabs indicated in a continuous operation by power spray or roller according to manufacturer's written instructions. Recoat areas subjected to heavy rainfall within three hours after initial application. Repeat process 24 hours later and apply a second coat. Maintain continuity of coating and repair damage during curing period.

3.12 JOINT FILLING

A. Prepare, clean, and install joint filler according to manufacturer's written instructions.

1. Defer joint filling until concrete has aged at least [one] [six] month(s). Do not fill joints until construction traffic has permanently ceased.

B. Remove dirt, debris, saw cuttings, curing compounds, and sealers from joints; leave contact faces of joints clean and dry.

C. Install semirigid joint filler full depth in saw-cut joints and at least 2 inches deep in formed joints. Overfill joint and trim joint filler flush with top of joint after hardening.

3.13 CONCRETE SURFACE REPAIRS

A. Defective Concrete: Repair and patch defective areas when approved by Architect. Remove and replace concrete that cannot be repaired and patched to Architect's approval.

B. Patching Mortar: Mix dry-pack patching mortar, consisting of 1 part portland cement to 2-1/2 parts fine aggregate passing a No. 16 sieve, using only enough water for handling and placing.

C. Repairing Formed Surfaces: Surface defects include color and texture irregularities, cracks, spalls, air bubbles, honeycombs, rock pockets, fins and other projections on the surface, and stains and other discolorations that cannot be removed by cleaning.

1. Immediately after form removal, cut out honeycombs, rock pockets, and voids more than 1/2 inch in any dimension to solid concrete. Limit cut depth to 3/4 inch. Make edges of cuts perpendicular to concrete surface. Clean, dampen with water, and brush-coat holes and voids with bonding agent. Fill and compact with patching mortar before bonding agent has dried. Fill form-tie voids with patching mortar or cone plugs secured in place with bonding agent.
2. Repair defects on surfaces exposed to view by blending white portland cement and standard portland cement so that, when dry, patching mortar matches surrounding color. Patch a test area at inconspicuous locations to verify mixture and color match before proceeding with patching. Compact mortar in place and strike off slightly higher than surrounding surface.
3. Repair defects on concealed formed surfaces that affect concrete's durability and structural performance as determined by Architect.

D. Repairing Unformed Surfaces: Test unformed surfaces, such as floors and slabs, for finish and verify surface tolerances specified for each surface. Correct low and high areas. Test surfaces sloped to drain for trueness of slope and smoothness; use a sloped template.

1. Repair finished surfaces containing defects. Surface defects include spalls, popouts, honeycombs, rock pockets, crazing and cracks in excess of 0.01 inch wide or that penetrate to reinforcement or completely through unreinforced sections regardless of width, and other objectionable conditions.
2. After concrete has cured at least 14 days, correct high areas by grinding.
3. Correct localized low areas during or immediately after completing surface finishing operations by cutting out low areas and replacing with patching mortar. Finish repaired areas to blend into adjacent concrete.
4. Correct other low areas scheduled to receive floor coverings with a repair underlayment. Prepare, mix, and apply repair underlayment and primer according to manufacturer's written instructions to produce a smooth, uniform, plane, and level surface. Feather edges to match adjacent floor elevations.
5. Correct other low areas scheduled to remain exposed with a repair topping. Cut out low areas to ensure a minimum repair topping depth of 1/4 inch to match adjacent floor elevations. Prepare, mix, and apply repair topping and primer according to manufacturer's written instructions to produce a smooth, uniform, plane, and level surface.
6. Repair defective areas, except random cracks and single holes 1 inch or less in diameter, by cutting out and replacing with fresh concrete. Remove defective areas with clean, square cuts and expose steel reinforcement with at least a 3/4-inch clearance all around. Dampen concrete surfaces in contact with patching concrete and apply bonding agent.

Mix patching concrete of same materials and mixture as original concrete, except without coarse aggregate. Place, compact, and finish to blend with adjacent finished concrete. Cure in same manner as adjacent concrete.

7. Repair random cracks and single holes 1 inch or less in diameter with patching mortar. Groove top of cracks and cut out holes to sound concrete and clean off dust, dirt, and loose particles. Dampen cleaned concrete surfaces and apply bonding agent. Place patching mortar before bonding agent has dried. Compact patching mortar and finish to match adjacent concrete. Keep patched area continuously moist for at least 72 hours.

E. Perform structural repairs of concrete, subject to Architect's approval, using epoxy adhesive and patching mortar.

F. Repair materials and installation not specified above may be used, subject to Architect's approval.

3.14 FIELD QUALITY CONTROL

A. Testing Agency: Engage a qualified testing and inspecting agency to perform tests and inspections and to submit reports.

B. Inspections (See Structural General Notes for additional requirements):
   1. Steel reinforcement placement.
   2. Headed bolts and studs.
   3. Verification of use of required design mixture.
   4. Concrete placement, including conveying and depositing.
   5. Curing procedures and maintenance of curing temperature.
   6. Verification of concrete strength before removal of shores and forms from beams and slabs.
   7. As required in structural inspection schedule drawings.

C. Concrete Tests: Testing of composite samples of fresh concrete obtained according to ASTM C172/C172M shall be performed according to the following requirements:
   1. Testing Frequency: Obtain at least one composite sample for each 100 cu. yd. or fraction thereof of each concrete mixture placed each day.
      a. When frequency of testing provides fewer than five compressive-strength tests for each concrete mixture, testing shall be conducted from at least five randomly selected batches or from each batch if fewer than five are used.
   2. Slump: ASTM C143/C143M; one test at point of placement for each composite sample, but not less than one test for each day's pour of each concrete mixture. Perform additional tests when concrete consistency appears to change.
   3. Air Content: ASTM C231/C231M, pressure method, for normal-weight concrete; one test for each composite sample, but not less than one test for each day's pour of each concrete mixture.
   4. Concrete Temperature: ASTM C1064/C1064M; one test hourly when air temperature is 40 deg F and below or 80 deg F and above, and one test for each composite sample.
   5. Compression Test Specimens: ASTM C31/C31M.
      a. Cast and laboratory cure two sets of two standard cylinder specimens for each composite sample.
      b. Cast and field cure two sets of two standard cylinder specimens for each composite sample.
   6. Compressive-Strength Tests: ASTM C39/C39M; test one set of two laboratory-cured specimens at 7 days and one set of two specimens at 28 days.
      a. Test one set of two field-cured specimens at 7 days and one set of two specimens at 28 days.
      b. A compressive-strength test shall be the average compressive strength from a set of two specimens obtained from same composite sample and tested at age indicated.

7. When strength of field-cured cylinders is less than 85 percent of companion laboratory-cured cylinders, Contractor shall evaluate operations and provide corrective procedures for protecting and curing in-place concrete.
8. Strength of each concrete mixture will be satisfactory if every average of any three consecutive compressive-strength tests equals or exceeds specified compressive strength and no compressive-strength test value falls below specified compressive strength by more than 500 psi.
9. Test results shall be reported in writing to Architect, concrete manufacturer, and Contractor within 48 hours of testing. Reports of compressive-strength tests shall contain Project identification name and number, date of concrete placement, name of concrete testing and inspecting agency, location of concrete batch in Work, design compressive strength at 28 days, concrete mixture proportions and materials, compressive breaking strength, and type of break for both 7- and 28-day tests.
10. Nondestructive Testing: Impact hammer, sonoscope, or other nondestructive device may be permitted by Architect but will not be used as sole basis for approval or rejection of concrete.
11. Additional Tests: Testing and inspecting agency shall make additional tests of concrete when test results indicate that slump, air entrainment, compressive strengths, or other requirements have not been met, as directed by Architect. Testing and inspecting agency may conduct tests to determine adequacy of concrete by cored cylinders complying with ASTM C 42/C 42M or by other methods as directed by Architect.
12. Additional testing and inspecting, at Contractor's expense, will be performed to determine compliance of replaced or additional work with specified requirements.
13. Correct deficiencies in the Work that test reports and inspections indicate do not comply with the Contract Documents.

D. Measure floor and slab flatness and levelness according to ASTM E1155 (ASTM E1155M) within 24 hours of finishing.

E. Do not permit traffic over unprotected concrete floor surface until fully cured.

END OF SECTION

SECTION 061000 - ROUGH CARPENTRY

PART 1 GENERAL

1.1 SECTION INCLUDES

A. Structural dimension lumber framing
B. Nonstructural dimension lumber framing
C. Rough opening framing for doors, windows, and roof openings.
D. Sheathing
E. Roofing nailers
F. Miscellaneous framing and sheathing
G. Concealed wood blocking, nailers, and supports.
H. Miscellaneous wood nailers, furring, and grounds.
I. Roof-mounted curbs.
J. Preservative treated wood materials.
K. Communications and electrical room mounting boards.
L. Miscellaneous wood nailers, furring, and grounds.
M. Cedar Panels.
N. Engineered Wood Products

1.2 RELATED REQUIREMENTS

A. 016000 - Product Requirements: For substitution and additional product requirements.
076200 - Sheet Metal Flashing and Trim.
092116 - Gypsum Board Assemblies.

1.3 SUBMITTALS

A. Qualification Data: For fabricator.
B. Product Data: Provide product criteria, characteristics, accessories, jointing and seaming methods, and termination conditions.
C. Manufacturer's Certificate: Certify that wood products supplied for rough carpentry meet or exceed specified requirements.
D. Structure Composite Lumber: Submit manufacturer's published structural data including span tables, marked to indicate which sizes and grades are being used; if structural composite lumber is being substituted for dimension lumber or timbers, submit grading agency structural tables marked for comparison.

1.4 QUALITY ASSURANCE

A. Manufacturer Qualification: Company specializing in the manufacture of work specified in this section with minimum 5 years of experience.
B. Fabricators Qualifications: Company specializing in performing the work of this section with minimum 5 years of experience on projects of similar size and complexity.

1.5 DELIVERY, STORAGE, AND HANDLING

A. General: Cover wood products to protect against moisture. Support stacked products to prevent deformation and to allow air circulation.
B. Preservative Treated Wood: Prevent exposure to precipitation during shipping, storage, or installation.

PART 2 PRODUCTS

2.1 DESCRIPTION

A. Provide miscellaneous rough carpentry items including preservative treated wood materials, roof-mounted curbs, miscellaneous wood nailers, furring, and grounds.

2.2 PERFORMANCE AND DESIGN CRITERIA

A. Provide Preservative-Treated Wood in locations required by ICC (IBC)-2018, Section 2304.12.1 through 2304.12.7, "Locations requiring water-borne preservatives or naturally durable wood," complying with the following requirements:

1. Comply with American Wood Protection Association AWPA U1 and AWPA M4.
2. Identification of Preservative-Treated Wood:
   a. Provide all preservative-treated wood, identified in accordance with ICC (IBC)-2018, Section 2303.1.9.1, to include: identification of the treating manufacturer; type of preservative used; minimum preservative retention (pcf); end use for which the product is treated; AWPA standard to which the product was treated; identity of the accredited inspection agency.
3. Moisture Content of Preservative-Treated Wood:
   a. Where preservative-treated wood is used in enclosed locations where drying in service cannot readily occur, such wood shall be at a moisture content of 19 percent or less before being covered with insulation, interior wall finish, floor covering or other materials; in accordance with ICC (IBC)-2018, Section 2302.1.9.2.
4. Fastener requirements at Preservative-Treated Wood:
   a. Fasteners and connectors in contact with preservative-treated wood and fire-retardant-treated wood, in accordance with ICC (IBC)-2018, Section 2304.10.5; ASTM A153/A153M, ASTM F1667.
      1) Fasteners or connectors for preservative-treated wood, including exceptions, in accordance with ICC (IBC)-2018, Section 2304.10.5.1.

2.3 MATERIALS

A. Lumber, General:
   1. Comply with DOC PS 20 and with applicable grading rules of inspection agencies certified by the American Lumber Standards Committee's (ALSC) Board of Review. Refer to structural drawings for nominal sizes, species, and grades. Provide dressed lumber, S4S, with each piece factory marked with grade stamp of inspection agency.
B. Wood-Preservative-Treated Materials:
   1. Comply with applicable requirements of AWPA C2 (lumber) and AWPA C9 (plywood). Mark each treated item with the Quality Mark Requirements of an inspection agency approved by ALSC's Board of Review. Dimension Lumber: Provide dimension lumber of grades indicated according to the ALSC National Grading Rule (NGR) provisions of the inspection agency indicated. Refer to Structural “General Notes” located in the Drawings.
C. Fire-retardant-Treated Materials:
   1. Basis of Design:
      a. Exterior Fireproofing: Hoover Treated Products "Exterior Fire-X."
      b. Interior Fireproofing: Clear finish product, Lonza Wood Protection "Dricon," Hoover Treated Wood Products "Pyro-Guard," or Koppers Performance Chemicals, "FirePRO."
   2. Classification: Class A.
D. Drywall Screws: Bugle head, hardened steel, power driven type, length three times sheathing thickness unless indicated otherwise in drawings.
E. Miscellaneous Lumber:
   1. Provide No. 3 or Standard grade lumber of any species for support or attachment of other construction, including rooftop equipment curbs and support bases, cant strips, bucks, nailers, blocking, and similar members.
F. Engineered Wood Products
   1. Engineered Wood Products, General: Products shall contain no urea formaldehyde. Source Limitations: Obtain each type of engineered wood product from a single source, from a single manufacturer.
   2. Parallel-Strand, Laminated-Strand, Laminated-Veneer Lumber (Structural Composite Lumber): Refer to structural Drawings.
   3. Wood I-Joists: Refer to structural Drawings.

4. Glued Laminated Members (Glulams): Refer to structural drawings.
5. Construction Panels (Roof Sheathing, Wall Sheathing): Refer to structural drawings

2.4 FASTENERS

A. General: Fasteners are to be of size and type indicated and comply with requirements specified in this article for material and manufacture. Provide nails or screws, in sufficient length, to penetrate not less than 1-1/2 inches into wood substrate.
   1. Where rough carpentry is exposed to weather, in ground contact, pressure-preservative treated, or in area of high relative humidity, provide fasteners with hot-dip zinc coating complying with ASTM A153/A153M or ASTM F2329.
B. Nails, Brads, and Staples: ASTM F1667.
C. Power-Driven Fasteners: Fastener systems with an evaluation report acceptable to authorities having jurisdiction, based on ICC-ES AC70.
D. Post-Installed Anchors: Fastener systems with an evaluation report acceptable to authorities having jurisdiction, based on ICC-ES AC01, ICC-ES AC58, ICC-ES AC193, or ICC-ES AC308 as appropriate for the substrate.

2.5 METAL FRAMING ANCHORS

A. Post Bases: As indicated.
B. Joist Ties: Flat straps, with holes for fasteners, for tying joists together over supports.
   1. Width: As indicated.
   2. Thickness: As indicated.
   3. Length: As indicated.
C. Rafter Tie-Downs: Bent strap tie for fastening rafters or roof trusses to wall studs below indicated in drawings.
D. Rafter Tie-Downs (Hurricane or Seismic Ties): Bent strap tie for fastening rafters or roof trusses in drawings.
E. Floor-to-Floor Ties: Flat straps, with holes for fasteners, for tying upper floor wall studs to band joists and lower floor studs indicated in drawings.
F. Hold-Downs: Brackets for bolting to wall studs and securing to foundation walls with anchor bolts or to other hold-downs with threaded rods and designed with first of two bolts placed seven bolt diameters from reinforced base.
   1. Bolt Diameter: As indicated.
   2. Width: As indicated.
   3. Body Thickness: As indicated.
   4. Base Reinforcement Thickness: As indicated.
G. Wall Bracing:
   1. T-shaped bracing made for letting into studs in saw kerf, 1-1/8 inches wide by 9/16 inch deep by 0.034 inch thick with hemmed edges.
   2. Angle bracing made for letting into studs in saw kerf, 15/16 by 15/16 by 0.040 inch with hemmed edges.
H. Materials: Unless otherwise indicated, fabricate from the following materials:
   1. Galvanized-Steel Sheet: Hot-dip, zinc-coated steel sheet complying with ASTM A653/A653M, G60 coating designation.
      a. Use for interior locations unless otherwise indicated.
   2. Heavy-Galvanized-Steel Sheet: Hot-dip, zinc-coated steel sheet complying with ASTM A653/A653M; structural steel (SS), high-strength low-alloy steel Type A (HSLAS Type A), or high-strength low-alloy steel Type B (HSLAS Type B); G185 coating designation; and not less than 0.036 inch thick.
      a. Use for wood-preservative-treated lumber and where indicated.
   3. Stainless steel bars and shapes complying with ASTM A276/A276M, Type as indicated.
      a. Use for exterior locations and where indicated

2.6 DIMENSIONAL LUMBER

A. Species and grades as indicated on the Structural drawings.

B. Comply with DOC PS 20 and with applicable grading rules of inspection agencies certified by the American Lumber Standards Committee's (ALSC) Board of Review. Provide dressed lumber, S4S, with each piece factory marked with grade stamp of inspection agency.

C. Miscellaneous Lumber:

1. Provide No. 3 or Standard grade lumber of any species for support or attachment of other construction, including rooftop equipment curbs and support bases, cant strips, bucks, nailers, blocking, and similar members.

2.7 ACCESSORIES

A. All accessory materials required by the manufacturer for a warrantable installation of the installed products in a manner that meets the Performance and Design Criteria.

B. Fasteners and Anchors:

1. Metal and Finish: Stainless steel for exterior, high humidity or preservative-treated wood locations, unfinished steel elsewhere.

C. Sill Flashing:

1. Sill Flashing: As specified in Section 076200 - Sheet Metal Flashing and Trim .

PART 3 EXECUTION

3.1 EXAMINATION

A. Verify existing conditions meet the manufacturer's requirements before starting work.

3.2 PREPARATION

A. Prepare surfaces to receive work in accordance with manufacturer's instructions.

3.3 INSTALLATION - GENERAL

A. Select material sizes to minimize waste.

B. Reuse scrap to the greatest extent possible; clearly separate scrap for use on site as accessory components, including: shims, bracing, and blocking.

C. Where treated wood is used on interior, provide temporary ventilation during and immediately after installation sufficient to remove indoor air contaminants.

3.4 FRAMING INSTALLATION

A. Set structural members level, plumb, and true to line. Discard pieces with defects that would lower required strength or result in unacceptable appearance of exposed members.

B. Make provisions for temporary construction loads, and provide temporary bracing sufficient to maintain structure in true alignment and safe condition until completion of erection and installation of permanent bracing.

C. Install structural members full length without splices unless otherwise specifically detailed.

D. Comply with member sizes, spacing, and configurations indicated, and fastener size and spacing indicated, but not less than required by applicable codes and AFPA (WFCM) Wood Frame Construction Manual.

E. Install horizontal spanning members with crown edge up and not less than 1-1/2 inches (38 mm) of bearing at each end, unless otherwise indicated on the drawings.

F. Construct double joist headers at floor and ceiling openings and under wall stud partitions that are parallel to floor joists; use metal joist hangers unless otherwise detailed.

G. Frame wall openings with two or more studs at each jamb; support headers on cripple studs.

3.5 BLOCKING, NAILERS, AND SUPPORTS

A. Provide framing and blocking members as indicated or as required to support finishes, fixtures, specialty items, and trim.

B. In framed assemblies that have concealed spaces, provide solid wood fireblocking as required by applicable local code, to close concealed draft openings between floors and between top story and roof/attic space; other material acceptable to code authorities may be used in lieu of solid wood blocking.

C. In walls, provide blocking attached to studs as backing and support for wall-mounted items, unless item can be securely fastened to two or more studs or other method of support is explicitly indicated.
D. Where ceiling-mounting is indicated, provide blocking and supplementary supports above ceiling, unless other method of support is explicitly indicated.
E. Provide the following specific non-structural framing and blocking:
   1. Handrails.
   2. Wall-mounted items.
   3. Wall paneling and trim.

3.6 ROOF-RELATED CARPENTRY
A. Provide wood curb at all roof openings except where prefabricated curbs are specified and where specifically indicated otherwise. Form corners by alternating lapping side members.

3.7 INSTALLATION OF CONSTRUCTION PANELS
A. Wall Sheathing: Secure with long dimension perpendicular to wall studs, with ends over firm bearing and staggered, using nails, screws, or staples as indicated on Structural drawings.
   1. Use plywood or other acceptable structural panels at building corners, for not less than 96 inches (2440 mm), measured horizontally.
   2. Provide inlet diagonal bracing at corners.
B. Roof Sheathing: Secure panels with long dimension perpendicular to framing members, with ends staggered and over firm bearing.
   1. Provide 2x blocking at all unframed panel edges or as indicated on the drawings. At long edges use sheathing clips where joints occur between roof framing members. 2. Nail panels to framing: Staples are not permitted.
   2. Nail panels to framing: Staples are not permitted.
C. Communications and Electrical Room Mounting Boards: Secure with screws to studs with edges over firm bearing; space fasteners at maximum 24 inches (610 mm) on center on all edges and into studs in field of board.
   1. At fire-rated walls, install board over wall board indicated as part of the fire-rated assembly.
   2. Where boards are indicated as full floor-to-ceiling height, install with long edge of board parallel to studs.
   3. Install adjacent boards without gaps.
   4. Size: 48 by 96 inches (2440 by 4880 mm), installed horizontally at ceiling height.
   5. Size and Location: As indicated on drawings.
   6. Paint all mounting boards. Leave one copy of fire treatment stamp visible (unpainted) for building inspector.

3.8 TOLERANCES
A. Framing Members: 1/4 inch (6 mm) from true position, maximum.
B. Surface Flatness of Floor: 1/8 inch in 10 feet (1 mm/m) maximum, and 1/4 inch in 30 feet (7 mm in 10 m) maximum.

3.9 CLEANING
A. Do not leave any wood, shavings, sawdust, etc. on the ground or buried in fill.
B. Prevent sawdust and wood shavings from entering the storm drainage system.
C. Dispose of all waste material in accordance with project's Waste Management Plan.

3.10 PROTECTION
A. Protect installed work as required by the manufacturer to maintain product performance, design criteria and warranty.
B. Preservative-treated wood materials:
   1. Any wood required to be treated by the local authority having jurisdiction.
   2. Classification and location as indicated.

3. Preservative-treated products by location:
    a. Wood framing members less than 8-inches above grade.
    b. Wood contacting concrete and masonry, roofing membrane and elsewhere as indicated or required.
    c. Wood floor plates that are installed over concrete slab-on-grade.
    d. Plywood where indicated or required.
    e. Wood cants, nailers, curbs, equipment support bases, blocking, stripping, coping substrate and similar members in connection with roofing, flashing, vapor barriers and waterproofing.
    f. Wood sills, sleepers, blocking, furring, stripping and similar concealed members in contact with masonry or concrete.

C. Fire-retardant-treated wood materials:
1. Any wood required to be treated by the local authority having jurisdiction.
2. Classification and location as indicated.

END OF SECTION

SECTION 062000 - FINISH CARPENTRY

PART 1 GENERAL

1.1 SECTION INCLUDES
- A. Interior Trim
- B. Interior Plywood Wall Paneling.
- C. Exterior Wood Trim
- D. Soffit Vents

1.2 RELATED REQUIREMENTS
- A. 061000 - Rough Carpentry: for additional carpentry items.
- B. 099113 - Exterior Painting and 099123 - Interior Painting: for field finish of finish carpentry items.

1.3 SUBMITTALS
- A. Qualification Data: For fabricator.
- B. Product Data:
  1. Provide data on fire retardant treatment materials and application instructions.
  2. Provide instructions for attachment hardware and finish hardware.
- C. Shop Drawings: Indicate materials, component profiles, fastening methods, jointing details, and accessories.
  1. Minimum Scale of Detail Drawings: 1-1/2 inch to 1 foot.
  2. Provide the information required by AWI/AWMAC/WI (AWS) Architectural Woodwork Standards.
- D. Sample: Submit three samples of each type of wood exposed to view, 11 inches by width of board (or 8 inches max) inch in size illustrating wood grain and specified finish.
- E. Maintenance Data: For user operation and maintenance of system including:
  1. Methods for maintaining system's materials and finishes.
  2. Precautions about cleaning materials and methods that could be detrimental to components, finishes, and performance.

1.4 QUALITY ASSURANCE
- A. Fabricator Qualifications: Company specializing in fabricating the products specified in this section with minimum five years of documented experience.
  1. Company with at least one project in the past 5 years with value of woodwork within 20 percent of cost of woodwork for this Project.
  2. Single Source Responsibility: Provide and install this work from single fabricator.

1.5 DELIVERY, STORAGE, AND HANDLING
- A. As required by the Quality Certification Program for installation of the installed products to meet the Performance and Design Criteria.

PART 2 PRODUCTS

2.1 DESCRIPTION
- A. Wood frames, dimensional lumber and plywood, wall base, and other wood trim, moldings, bases, casings, and miscellaneous trim for doors, glazed lights, window sills, loose shelving. Carpentry items shop fabricated and finished in accordance with AWI/AWMAC/WI (AWS) Architectural Wood Work standards.

2.2 MATERIALS
- A. General:
  1. Lumber: DOC PS 20 and the following grading rules:
     - a. NeLMA: Northeastern Lumber Manufacturers' Association, "Standard Grading Rules for Northeastern Lumber."
     - b. NLGA: National Lumber Grades Authority, "Standard Grading Rules for Canadian Lumber."

c. RIS: Redwood Inspection Service, "Standard Specifications for Grades of California Redwood Lumber."
d. WCLIB: West Coast Lumber Inspection Bureau, Standard No. 17, "Grading Rules for West Coast Lumber."
e. WWPA: Western Wood Products Association, "Western Lumber Grading Rules."
2. Factory mark each piece of lumber with grade stamp of inspection agency indicating grade, species, moisture content at time of surfacing, and mill.

B. Interior Woodwork Items:
1. Finish: Stain to match existing.
2. Species: Sustainable wood; Match existing.
3. Miscellaneous Trim.
a. Profiles: Match existing size and profile.

C. Sheet Materials:
1. Hardwood Veneer Plywood Paneling: Manufacturer's stock hardwood plywood panels complying with HPVA HP-1
a. Manufacturers: Subject to compliance with requirements, available manufacturers offering products that may be incorporated into the Word include, but are not limited to the following:
1) Columbia Forest Products
2) Georgia-Pacific
3) National Plywood
4) Weyerhaeuser Company
b. Veneer Grade
c. Veneer Matching: Selected for similar color and grain
d. Backing Veneer Species: Any hardwood compatible with face species.
e. Construction: Veneer core.
f. Thickness: 5/8 inch
g. Panel size: 48 by 96 inches
h. Glue Bond: Type II (interior).
i. Face Pattern: Flat
j. Finish: See Specification section 099123 - Interior Painting.

D. Exterior Wood Trim:
1. Lumber Trim for Painted Finish
a. Species and Grade: Western red cedar, Grade A; NLGA, WCLIB or WWPA.
b. Maximum Moisture Content: 15 percent with at least 85 percent of shipment at 12 percent or less.
c. Finger Jointing: Not allowed.
d. Face Surface: Surfaced (smooth).

E. Soffit Vents:
1. Continuous soffit vent non-mechanically fastened to match existing.
2. Aluminum, Vent slots, 1/8" wide and 1" long.

F. Site Finishing:
1. In accordance with Section 099123 - Interior Painting.

G. Fasteners for Interior Finish Carpentry: Nails, screws, and other anchoring devices of type, size, material and finish required for application indicated to provide secure attachment, concealed where possible.

2.3 ACCESSORIES

A. All accessory materials required by the manufacturer for a warrantable installation of the installed products in a manner that meets the Performance and Design Criteria.

PART 3 EXECUTION

3.1 EXAMINATION

A. Verify existing conditions meet the requirements of the quality standard specified before starting work.

3.2 PREPARATION

A. Prepare surfaces to receive work in accordance with quality standard specified.

3.3 INSTALLATION

A. General: Install all materials in accordance with quality standard specified based on conditions present.

B. Install interior finish carpentry level, plumb, true, and aligned with adjacent materials. Use concealed shims where necessary for alignment.

1. Scribe and cut to fit adjoining work. Refinish and seal cuts as recommended by quality standard.
2. Where face fastening is unavoidable, countersink fasteners, fill surface flush, and sand unless otherwise indicated.
3. Install to tolerance of 1/8 inch in 96 inches for level and plumb. Install adjoining interior finish carpentry with 1/32 inch maximum offset for flush installation and 1/16-inch maximum offset for reveal installation.

C. Install with trim with minimum number of joints practical, using full-length pieces from maximum lengths of lumber available. Do not use pieces less than 24 inches long, except where necessary. Stagger joints in adjacent and related standing and running trim. Miter at returns, miter at outside corners, and cope at inside corners to produce tight-fitting joints with full-surface contact throughout length of joint. Use scarf joints for end-to-end joints.

3.4 PROTECTION

A. Protect installed work as required by the quality standard to maintain product performance, design criteria, and warranty.

3.5 PLASTIC LAMINATE WAINSCOAT COLOR SCHEDULE

A. See drawings for locations

1. LAM-2 Formica 5880-58 Earthen Wrap

3.6 SOLID SURFACE SILL COLOR SCHEDULE

A. SS-1 (Window Sills) Formica 656 River Rock Mosaic

END OF SECTION

SECTION 064100 - ARCHITECTURAL WOOD CASEWORK

PART 1 GENERAL

1.1 SECTION INCLUDES
- A. Cabinetry.
- B. Cabinet Hardware.

1.2 RELATED REQUIREMENTS
- A. 061000 - Rough Carpentry: For hidden shelf supports.
- B. 062000 - Finish Carpentry: For additional wood-based products.

1.3 ADMINISTRATIVE REQUIREMENTS
- A. Preinstallation Meeting: Convene one week before starting work of this section in accordance with Section 013100 - Project Management and Coordination.
  1. Review preparation and installation procedures and coordinating and scheduling required with related work.

1.4 SUBMITTALS
- A. Qualification Data: For fabricator and installer.
- B. Product Data: Provide data for hardware, accessories, and finishes.
- C. Shop Drawings: Indicate materials, component profiles, fastening methods, jointing details, and accessories.
  1. Minimum Scale of Detail Drawings: 1-1/2 inch to 1 foot.
  2. Provide the information required by AWI/AWMAC/WI (AWS) Architectural Woodwork Standards.
- D. Sample: Submit sample of cabinet panel construction, minimum 12 inches square, illustrating proposed cabinet substrate and finish.
- E. Hardware Samples: Submit actual sample items of proposed pulls, hinges, shelf standards, and locksets, demonstrating hardware design, quality, and finish.
- F. Certificate: Submit certification of required wood products, produced from wood complying with FSC STD-01-001, FSC Principles and Criteria for Forest Stewardship.
- G. Manufacturer's Installation Instructions: For finishes and hardware. Indicate special preparation of substrate, installation and attachment methods, and perimeter conditions requiring special attention.
- H. Maintenance Data: For user operation and maintenance of system including:
  1. Methods for maintaining system's materials and finishes.
  2. Precautions about cleaning materials and methods that could be detrimental to components, finishes, and performance.

1.5 MAINTENANCE MATERIAL
- A. Furnish extra materials described below, before installation begins, that match products installed, are packaged with protective covering for storage, and are identified with labels clearly describing contents.

1.6 QUALITY ASSURANCE
- A. Fabricators Qualifications: Company specializing in performing the work of this section with minimum 5 years of experience on projects of similar size and complexity.
- B. Installer Qualifications: Company specializing in performing the work of this section with minimum of 5 years of experience.

1.7 DELIVERY, STORAGE, AND HANDLING
- A. As required by the quality standard and fabricator for a warrantable installation of the installed products to meet the Performance and Design Criteria.

PART 2 PRODUCTS

2.1 DESCRIPTION

A. Custom designed and fabricated casework plastic laminate over MDF core and associated accessories and hardware. Cabinets to match existing design.

2.2 MATERIALS

A. Cores:
   1. Typical: MDF: ANSI A208.2, Grade 130; made with binder containing no urea-formaldehyde resin.
   2. Toe Boxes: Marine-Grade Plywood: APA B-B Marine Grade plywood, exterior exposure durability rating, waterproof glue, free of voids and knotholes, complying with Voluntary Product Standard PS 1-95 Construction and Industrial Plywood.

B. Plastic Laminate Materials:
   1. Specification is based on products listed below.
   2. High Pressure Decorative Laminate (HPDL): NEMA LD 3, types as recommended for specific applications.
      a. Horizontal Surfaces: HGS, 0.048 inch nominal thickness.
      b. Vertical Surfaces: VGS, 0.028 inch nominal thickness.
      c. Flame Retardant Surfaces: HGF, 0.048 inch nominal thickness.
      d. Cabinet Liner: CLS, 0.020 inch nominal thickness.
      e. Laminate Backer: BKL, 0.020 inch nominal thickness, undecorated; for application to concealed backside of panels faced with high pressure decorative laminate.

2.3 CABINET HARDWARE

A. Drawer Slides:
   1. Basis of Design: Blum full extension soft close or approved equal.
   2. Performance Criteria:
      a. Rated medium duty grade for drawer size where indicated.
         1) Drawer slides rated for 100 lbs. minimum.
      b. Rated extra heavy duty grade for drawer size where indicated.
         1) Drawer slides rated for 250 lbs. minimum.
   3. Features:
      a. Full extension.
      b. Soft-close, stay-closed feature.

B. Door and Drawer pulls:
   1. Basis of Design: GlideRite Hardware.
   2. Performance Criteria:
      a. ADA Standards Compliant.
   3. 2-1/2-inch Center to Center:
      a. Model No.: 5007-64-MB.
      b. Finish: Black matte.
      c. Location: Typical pulls for cabinetry.
   4. 4-inches Center to Center:
      a. Match existing shape and size.
      b. Finish: Black matte.
      c. Location: Wardrobe casework and bed casework.

C. All cabinet casework exteriors and all exposed surfaces of open cabinets, including shelves, to be high pressure plastic laminate.

D. Cabinet casework doors to be laminated both sides. Cabinet casework scribes and box edges to be banded with laminate to match face color. Cabinet door and drawer edges to be banded with 3mm PVC edging, with color to match face laminate. All exposed ends of cabinet casework to be covered with matching laminate. Use one piece for full length only.

E. Hinges: 5-knuckle overlay, 2-3/4" in height, 270 degree opening angle for all casework, finish: US26D.
F. Cabinet Door Lock:
1. Locks: Half-mortise type with 5-pin tumbler and dead bolt, round cylinder only exposed, brass with US 26D Finish. Provide two keys per lock.

2.4 ACCESSORIES
A. All accessory materials required by the manufacturer for a warrantable installation of the installed products in a manner that meets the Performance and Design Criteria.
B. Wardrobe Locker Cabinet Vent: Perko -- transom or locker ventilator 0550, stainless steel, size: 7" x 2-1/2". #8 Screws.
1. Manufacturer: Cabinet Master Plastic Hardware by Bainbridge Manufacturing, Inc.
2. Model: 4503 Vent Grill.
3. Application: Wardrobe Locker.
4. Size: Fits 2-3/8-inch x 8-5/8-inch hole.
5. Color: To be selected by Architect from manufacturer's full range of colors.
C. Clothes Rod: 1-5/16 inch diameter, 12 guage steel chrome plated with captive and flanges. K/V #770-5 with #764/#766 flanges.
D. Magnetic Catches at Wardrobe Casework: magnet touch latches.

PART 3 EXECUTION

3.1 EXAMINATION
A. Verify existing conditions meet the manufacturer's requirements before starting work.

3.2 PREPARATION
A. Prepare surfaces to receive work in accordance with Quality Standards.

3.3 INSTALLATION
A. General: Install all materials in accordance with manufacturer's instructions based on conditions present.
B. Assemble cabinets and complete fabrication.
C. Anchor cabinets to structure. Secure with countersunk, concealed fasteners
1. For shop finished items, use color matched wood filler.
D. Install cabinets level, plumb, and true in line to a tolerance of 1/8 inch in 96 inches using concealed shims.
1. Scribe and cut cabinets to fit adjoining work and repair damaged finish at cuts.
2. Install cabinets without distortion so doors and drawers fit openings and are accurately aligned.
3. Maintain veneer sequence matching of cabinets with transparent finish.
E. Shop Finishes: Touch up finishing after installation of architectural cabinets. Fill nail holes with matching filler.
1. Apply specified finish coats, including stains and paste fillers if any, to exposed surfaces where only sealer/prime coats are shop applied.

3.4 ADJUSTING
A. Adjust and lubricate hardware for proper operation. Adjust hardware to center doors and drawers in openings and to provide smooth operation. Complete installation of hardware and accessory items as indicated.

3.5 PROTECTION
A. Protect installed work as required by the manufacturer to maintain product performance, design criteria, and warranty.

3.6 SCHEDULE
A. Cabinet Construction Style: Flush Overlay; Refer to interior elevations for style.
B. Plastic Laminate Faced Cabinets:
1. Manufacturer: Match existing.

2. Style Number/Name: Match existing.

END OF SECTION

SECTION 072100 - THERMAL INSULATION

PART 1 GENERAL

1.1 SECTION INCLUDES
- A. Fiber Batt Insulation.
- B. Sound Attenuation Batt Insulation
- C. Sheet Vapor Retarder

1.2 RELATED REQUIREMENTS
- A. 092116 - Gypsum Board Assemblies: For acoustic insulation installed as a component of assemblies.

1.3 SUBMITTALS
- A. Product Data: Provide data on product characteristics, performance criteria, and product limitations.
- B. Test Report: Submit report of full-size mockup test for NFPA 285 fire performance, with project cladding assemblies highlighted, for foam insulation on exterior.
- C. Shop Drawings: Indicate required flashings, control joints, and expansion joints, and sealing details at openings, projections, penetrations, and sleeves to maintain continuous thermal barrier.
- D. Manufacturer's Installation Instructions: Indicate special preparation of substrate, installation and attachment methods, and perimeter conditions requiring special attention.
  1. Include recommended fastening components and spacing to control sag.
  2. Include manufacturer's recommended product for thermal barrier over foam insulation exposed to interior in accordance with IBC 2012.2603.4.
     - a. ". . .tested in accordance with and meets the acceptance criteria of both the Temperature Transmission Fire Test and the Integrity Fire Test of NFPA 275."

1.4 QUALITY ASSURANCE
- A. Installer Qualifications: Company specializing in performing the work of this section with minimum 2 years' experience.

1.5 DELIVERY, STORAGE, AND HANDLING
- A. As required by the manufacturer for a warrantable installation of the installed products to meet the Performance and Design Criteria.

PART 2 PRODUCTS

2.1 DESCRIPTION
- A. Batt thermal insulation and perimeter of foundation insulation.

2.2 FOAM BOARD INSULATION MATERIALS
- A. Extruded Polystyrene (XPS) Board Insulation: Comply with ASTM C578 with either natural skin or cut cell surfaces.
  1. Flame Spread Index (FSI): Class A - 0 to 25, when tested in accordance with ASTM E84.
  2. Smoke Developed Index (SDI): 450 or less, when tested in accordance with ASTM E84.
  3. Type and Thermal Resistance, R-Value (RSI-value): Type IV, 5.0 (0.88), minimum, per 1 inch (25.4 mm) thickness at 75 degrees F (24 degrees C) mean temperature.
     - a. See drawings for sizes.
  4. Products:
     - a. DuPont de Nemours, Inc: Styrofoam Brand.
     - b. Kingspan Insulation LLC; GreenGuard XPS Type IV, 25 psi: www.kingspan.com/
     - c. Owens Corning CorporationL FOAMULAR Extruded Polystyrene (XPS) Insulation: www.ocbuildingspec.com/
     - d. Substitutions: See Section 016000 - Product Requirements.

2.3 MATERIALS
- A. Fiber Batt Insulation:

1. Mineral Fiber Batt Insulation: Unfaced preformed batt, complying with ASTM C665; friction fit.
    a. Basis of Design: Owens Corning Thermafiber Mineral Wool.
    b. Performance Criteria:
        1) Combustibility: Non-combustible, when tested in accordance with ASTM E136.
        2) Manufactured with binder containing no added urea formaldehyde.
        3) Flame Spread Index: 25 or less, when tested with facing, if any, in accordance with ASTM E84.
        4) Smoke Developed Index: 450 or less, when tested in accordance with ASTM E84.
        5) Thermal Resistance (R Value) at 40 degrees F/inch of thickness: 3.1.
    c. Features:
        1) Formaldehyde Free.

B. Sound Attenuation Batt Insulation:
1. Mineral Fiber Batt Insulation: Flexible preformed batt or blanket, complying with ASTM C665; friction fit.
    a. Basis of Design: MinWool Sound Attenuation Fire Batts by Johns Manville.
    b. Performance Criteria:
        1) Combustibility: Non-combustible, when tested in accordance with ASTM E136.
        2) Manufactured with binder containing no added urea formaldehyde.
        3) Flame Spread Index: 25 or less, when tested with facing, if any, in accordance with ASTM E84.
        4) Smoke Developed Index: 450 or less, when tested in accordance with ASTM E84.
        5) Thermal Resistance (R Value) at 40 degrees F/inch of thickness: 3.1.
    c. Features:
        1) Formaldehyde Free.

C. Sheet Vapor Retarder
1. Vapor Retarder: Specification is based on MemBrain by Certainteed or approved equal.
    a. Substitutions for products by manufacturers other than those listed above: See Section 01 60 00 - Product Requirements.
2. Performance Criteria:
    a. Water Vapor Permeance: 1 perm (57.2 ng/(s·m²·Pa)) or less when tested to ASTM E96/E96M, dry cup method and increases to greater than 10 perms (572.1 ng/(s·m²·Pa)) using the wet cup method.
    b. Corrosivity: No unusual aspect of corrosion such as pitting, cracking and adhesion cure inhibition, tested per ASTM C665.
    c. Fungi Resistance: No growth, tested per ASTM C1338.
    d. Surface Burning Characteristics: Tested per ASTM E84.
        1) Flame Spread Index: Maximum 20.
        2) Smoke Developed Index: Maximum 55.
3. Features:
    a. Material: Polyamide film.
    b. Thickness: 2 mil (0.051 mm).

2.4 ACCESSORIES

A. All accessory materials required by the manufacturer for a warrantable installation of the installed products in a manner that meets the Performance and Design Criteria.
B. Vapor Retarder:
1. Basis of Design: T-Foil by JAS Enterprises.

2. Performance Criteria:
    a. Insulation holder/hanging system.
    b. Polypropylene, Scrim, Kraft - White.
    c. Flame Spread 10, Smoke Developed 35 ASTM E84/UL 723.
    d. Permeance ASTM E96 .02 Perm Perforated ASTM E96 Procedure A.
    e. Hanging system does not compress insulation.
    f. Drop card size based on width of structural roof framing.

PART 3 EXECUTION

3.1 EXAMINATION

A. Verify existing conditions meet the manufacturer's requirements before starting work.

3.2 PREPARATION

A. Prepare surfaces to receive work in accordance with manufacturer's instructions.

3.3 INSTALLATION

A. General: Install all materials in accordance with manufacturer's instructions based on conditions present.

3.4 PROTECTION

A. Protect installed work as required by the manufacturer to maintain product performance, design criteria, and warranty.

END OF SECTION

SECTION 072500 - WEATHER BARRIERS

PART 1 GENERAL

1.1 SECTION INCLUDES
- A. Self-Adhered Weather Barrier Sheet.

1.2 RELATED REQUIREMENTS
- A. 072100 - Thermal Insulation: Vapor retarder and air barrier components installed in conjunction with insulation.
- B. 076200 - Sheet Metal Flashing and Trim: Metal flashings installed in conjunction with weather barriers.

1.3 DEFINITIONS
- A. Weather Barrier: Assemblies that form water-resistive barriers, air barriers, or vapor retarders.
- B. Air Barrier: Air tight barrier made of material that is relatively air impermeable but water vapor permeable, both to the degree specified, with sealed seams and with sealed joints to adjacent surfaces.
- C. Water-Resistive Barrier: Water-shedding barrier made of material that is moisture-resistant, to the degree specified, intended to be installed to shed water without sealed seams.

1.4 ADMINISTRATIVE REQUIREMENTS
- A. Preinstallation Meeting: Convene one month before starting work of this section in accordance with Section 013100 - Project Management and Coordination.
  1. Review all related project requirements and submittals, status of substrate work and preparation, areas of potential conflict and interface, availability of air barrier system materials and components, installer's training requirements, equipment, facilities and scaffolding, and coordinate methods, procedures and sequencing requirements for full and proper installation, integration and protection of continuous air barrier.

1.5 SUBMITTALS
- A. Qualification Data: For manufacturer and installer.
- B. Product Data: Provide product criteria, characteristics, accessories, jointing and seaming methods, and termination conditions.
- C. Shop Drawings: Indicate extents, special joint or termination conditions, and conditions of interface with other materials. Indicate line of continuous air barrier at building exterior.
- D. Manufacturer's Field Service Reports: Provide site reports from authorized field service representative, indicating observation of air barrier system installation.
- E. Test Report: Submit report of full-size mockup test for NFPA 285 fire performance.
- F. Field test results.
- G. Manufacturer's Installation Instructions: Indicate special preparation of substrate, installation and attachment methods, perimeter conditions requiring special attention, and storage and handling criteria.
- H. Warranty: Submit manufacturer warranty and ensure forms have been completed in Owner's name and registered with manufacturer.

1.6 QUALITY ASSURANCE
- A. Manufacturer Qualification: Company specializing in the manufacture of work specified in this section with minimum 5 years of experience with local product representation available to review product installation.
- B. Installer Qualifications: Company specializing in performing the work of this section, using specified materials with minimum 5 years of experience on projects of similar size and complexity.

1.7 MOCKUP
- A. Construct mockup of 100 sq ft of horizontal waterproofing, representing finished work including internal and external corners.

1.8 DELIVERY, STORAGE, AND HANDLING
- A. As required by the manufacturer for a warrantable installation of the installed products to meet the Performance and Design Criteria.

1.9 WARRANTY
- A. Manufacturer's warranty for air barrier for a period of ten (10) years from date of Purchase.
  - 1. Preinstallation meeting and jobsite observations by air barrier manufacturer may be required for specified warranty.

PART 2 PRODUCTS

2.1 DESCRIPTION
- A. Components of vapor retarder and air barrier assemblies under opaque cladding.

2.2 PERFORMANCE AND DESIGN CRITERIA
- A. Air Permeability:
  - 1. The system: Air permeability not to exceed 0.04 cfm/ft2 under a pressure differential listed, when tested per ASTM E2357
- B. Air Infiltration: 0.004 cfm/sq ft maximum per ASTM E283.
- C. Fire Performance: Tested in accordance with, and complying with the acceptance criteria of, NFPA 285; testing must be performed specifically for this project.
- D. Fire Performance: Combustible exterior wall coverings shall be tested in accordance with NFPA 268.
  - 1. 2012 IBC.1406.1.1.

2.3 MATERIALS
- A. Self-Adhered Weather Barrier Sheet:
  - 1. Specification is based on PanelShield SA Self-Adbhered Membrane System by Vaproshiel
    - a. Features:
      - 1) Material Thickness: 18 mils.
      - 2) Ultraviolet and Weathering Resistance: Approved in writing by the manufacturer for a minimum of 6 months weather exposure.
      - 3) Continuous adhesion.
    - b. Substitutions for products by manufacturers other than those listed above: See Section 016000 - Product Requirements.
  - 2. Performance Criteria:
    - a. Air Permeance: 0.0001 per meters squared when tested in accordance with ASTM E2178.
    - b. Water Vapor Permeance: 26 perms, minimum, when tested in accordance with ASTM E96/E96M.
  - 3. Flexible Self-adhered flashings and sealants by the same WRB Manufacturer:
    - a. Window, Louver and Door Openings:
      - 1) PanelFlashing SA 11-3/4 inch width. Install per WRB manufacturer's requirements.
      - 2) VaproLiqui-Flash: Install per WRB manufacturer's requirements.
      - 3) VaproAir Seal: Install on interior side, after installing foam backer rod, per WRB manufacturer's requirements
  - 4. Overlapping existing WRB over new WR
    - a. VaporBond seala
  - 5. Exterior wall penetrations including all electrical, HVAC and wall plumbing penetrations:
    - a. VaproLiqui-Flash: Install per WRB Manufacturer's requirements.

2.4 ACCESSORIES
- A. All accessory materials required by the manufacturer for a warrantable installation of the installed products in a manner that meets the Performance and Design Criteria.

B. Counter-flashing and Transition Strips:
   1. Modified bituminous or butyl based, 40-mil thick, self-adhering sheet flashing, polyethylene or foil carrier sheet as location and function dictate.
C. Substrate-Patching Membrane:
   1. Manufacturer's standard trowel-grade substrate filler.
D. Metal Flashings:
   1. Per 07 62 00 - Sheet Metal Flashing and Trim.
E. Joint Sealant:
   1. Per 07 90 05 - Joint Sealers.
F. Air Barrier Sealant:
   1. Manufacturer’s recommended sealant to seal field sheet-applied air barrier membrane to sheet-applied air barrier membrane; seal field sheet-applied air barrier membrane to self-adhered membrane; seal membrane flashing around opening to vinyl windows and doors.

PART 3 EXECUTION

3.1 EXAMINATION
A. Verify existing conditions meet the manufacturer's requirements before starting work.

3.2 PREPARATION
A. Prepare surfaces to receive work in accordance with manufacturer's instructions.

3.3 INSTALLATION
A. General: Install all materials in accordance with manufacturer's instructions based on conditions present.
B. Follow specific requirements for lapping and integration with flashings described in the details to form an air and weather tight installation.
C. Where primer is required, primer substrates at a rate required by air and water barrier manufacturer and allow it to dry. Limit priming to areas that will be covered by material on same day. Re-prime areas exposed for more than 24 hours.
   1. Where required, prime glass-fiber-surfaced gypsum sheathing with number of prime coats needed to achieve required bond, with adequate drying time between coats.
D. Connect and seal exterior wall air and water barrier material continuously to the following areas where applicable, using accessory materials as indicated in the Drawings:
   1. Roofing-membrane, concrete below-grade structures, floor-to-floor construction, exterior glazing and window systems, glazed curtain-wall systems, storefront systems, exterior louvers, exterior door framing, and other construction used in exterior wall openings.
E. Install air and water barrier as recommended by the manufacturer around window and door rough openings and at exterior wall penetrations after sheathing is installed and penetrations have been secured. Provide minimum overlaps as required by weather barrier manufacturer.
F. Coordinate installations with Section 076200 - Sheet Metal Flashing and Trim to provide air tight transitions within the air and weather barrier membrane including but not limited to rough opening and penetration heads, ledger angles, and cross cavity through wall flashings. Install tapes and sealant continuously as required to provide an air tight installation.
G. Secure and/or adhere the air and weather barrier system as required by manufacturer.
H. Ensure that air and weather barrier is air tight, free from holes, tears, and punctures.
I. Cover air and weather barrier system within manufacturer’s recommended exposure timeframe.

3.4 CLEANING
A. Clean dust, dirt, and debris from the surface of air and water resistant barriers prior to installation of furring and/or cladding materials.

3.5 PROTECTION
A. Protect air and water barrier system from damage during application and remainder of construction period, according to manufacturer's written instructions.

1. Protect air and weather barrier from exposure to UV light and harmful weather exposure as required by manufacturer. If exposed to these conditions for longer than manufacturer's recommended timeframe, remove and replace fluid-applied air and weather barrier or install additional, full-thickness, fluid-applied air and weather barrier application after repairing and preparing the overexposed membrane according to fluid-applied air and weather barrier manufacturer's written instructions.
2. Protect fluid-applied air and weather barrier from contact with incompatible materials and sealants not approved by fluid-applied air and weather barrier manufacturer.

B. Repair damage before proceeding with subsequent construction.
C. Clean spills, stains, and soiling from construction that would be exposed in the completed work using cleaning agents and procedures recommended by manufacturer of affected construction.
D. Remove masking materials after installation.

END OF SECTION

SECTION 074113 - METAL ROOF PANELS

PART 1 GENERAL

1.1 SECTION INCLUDES
- A. Architectural Metal Roof Panels.

1.2 RELATED REQUIREMENTS
- A. 079005 - Joint Sealers: For joint sealant installed with system.

1.3 SUBMITTALS
- A. Qualification Data: For manufacturer, installer, and design engineer.
- B. Product Data: Provide product criteria, characteristics, accessories, jointing and seaming methods, and termination conditions.
  1. Summary of test results, indicating compliance with specified requirements.
  2. Specimen warranty.
- C. Shop Drawings: Include layouts of roof panels, details of edge and penetration conditions, spacing and type of connections, flashings, underlayments, and special conditions.
  1. Show work to be field-fabricated or field-assembled.
- D. Sample: For each roofing system specified, submit samples of minimum size 12 inches square, representing actual roofing metal, thickness, profile, color, and texture.
- E. Manufacturer's Installation Instructions: Indicate special preparation of substrate, installation and attachment methods, and perimeter conditions requiring special attention.
- F. Specimen Warranty: Submit manufacturer’s weathertightness and finish warranties.
- G. Warranty: Submit manufacturer warranty and ensure forms have been completed in Owner's name and registered with manufacturer.
- H. Maintenance Data: For user operation and maintenance of system including:
  1. Methods for maintaining system's materials and finishes.
  2. Precautions about cleaning materials and methods that could be detrimental to components, finishes, and performance.

1.4 QUALITY ASSURANCE
- A. Manufacturer Qualifications: Company specializing in the manufacture of roofing systems similar to those required for this project.
  1. Not less than 5 years of documented experience.
  2. Accredited by IAS according to IAS AC472.
- B. Installer Qualifications: Company trained and authorized by roofing system manufacturer and specializing in performing the work of this section with minimum 5 years of experience.

1.5 DELIVERY, STORAGE, AND HANDLING
- A. As required by the manufacturer for a warrantable installation of the installed products to meet the Performance and Design Criteria.

1.6 WARRANTY
- A. Manufacturer’s Weathertightness Warranty: 20 years.
- B. Finish Warranty: Provide manufacturer’s special warranty covering failure of factory-applied exterior finish on metal roof panels and agreeing to repair or replace panels that show evidence of finish degradation, including significant chalking, cracking, or peeling within specified warranty period of 20 year period from date of Substantial Completion.

PART 2 PRODUCTS

2.1 DESCRIPTION
- A. Complete roofing assemblies, including factory formed panels with factory applied finish roof panels, clips, fasteners, connectors, and miscellaneous accessories, tested for conformance with performance criteria.

2.2 PERFORMANCE AND DESIGN CRITERIA

A. Structural Performance: Provide metal panel systems capable of withstanding the effects of the following loads, based on testing according to ASTM E330/E330M:
   1. Design and size components to withstand dead and live loads caused by positive and negative wind pressure acting normal to plane of wall as calculated in accordance with code.
   2. Maximum Allowable Deflection of Panel: 1/180 of span.
B. Roof Covering External Fire-Resistance Classification: UL Class A.
C. Wind Uplift: Class 90 wind uplift resistance of UL 580.
D. Provide positive drainage to exterior for moisture entering or condensation occurring within panel system.
E. Provide continuity of thermal barrier at building enclosure elements and continuity of air barrier and vapor retarder seal at building enclosure elements in conjunction with materials specified in Section 072500 - Weather Barriers.
F. Accommodate movement within system without damage to components or deterioration of seals, movement within system; movement between system and perimeter components when subject to seasonal temperature cycling; dynamic loading and release of loads; and deflection of structural support framing.
G. Fabricate and finish panels and accessory items at factory, using manufacturer’s standard processes as required to achieve specified appearance and performance requirements.
H. Factory-install captive gaskets, sealants, or separator strips at panel joints to provide weathertight seals, eliminate metal-to-metal contact, and minimize noise from panel movements.

2.3 MATERIALS

A. Aluminum Sheet: ASTM B209 (ASTM B209M), smooth surface texture; continuous-coil-coated on exposed surfaces with specified finish coating and on panel back with specified panel back coating.
   1. Features:
      a. Sheet Thickness: As scheduled below.
      b. Alloy: Manufacturer's standard, selected for best appearance and finish durability.

2.4 METAL ROOF PANELS

A. Basis of Design: Design Span HP by ASC Building Products.
   1. Substitutions for products by manufacturers other than those listed: See Section 016000 - Product Requirements.
B. Performance Criteria:
   1. Structural Design Criteria: Provide panel assemblies designed to safely support design loads at support spacing indicated, with deflection not to exceed 1/180 of the span when tested in accordance with ASTM E1592.
   2. ASTM E1592: Structural uniform static air pressure, ASTM 1646: Water infiltration, ASTM 2140: Water infiltration, ASTM 1680: Air infiltration.
C. Features:
   1. 22 ga.
   2. Coverage: 18".
   3. Color: Dura Tech 5000, (PVDF), Cool Slate Grey

2.5 ACCESSORIES

A. All accessory materials required by the manufacturer for a warrantable installation of the installed products in a manner that meets the Performance and Design Criteria.
B. Miscellaneous Sheet Metal Items:
   1. Provide flashings, gutters, downspouts, trim, moldings, closure strips, preformed crickets, caps, and equipment curbs of the same material, thickness, and finish as used for the

roofing panels.

C. Underlayment:
   1. Self-adhering rubber-modified asphalt sheet complying with ASTM D1970/D1970M; 22 mil total thickness; with strippable release film and woven polypropylene sheet top surface.
      a. Basis of Design: GRACE Ice and Water Shield by GCP Applied Technologies.
         1) Approved Alternate: WIP 300 HT by Carlisle.
      b. Performance Criteria:
         1) Self Sealability: Passing nail sealability test specified in ASTM D1970/D1970M.
         2) Low Temperature Flexibility: Passing test specified in ASTM D1970/D1970M.
         3) High Temperature: Must meet AAMA 711 specification for heat exposure range Level 3.
         4) Water Vapor Permeance: 0.067 perm, when tested in accordance with ASTM E96/E96M Procedure A (desiccant method).
         5) Functional Temperature Range: Minus 70 degrees F to 212 degrees F.
D. Sealants: Refer to Section 079005 - Joint Sealers.
E. Miscellaneous Secondary Framing:
   1. Light gauge steel framing incidental to structural supports; fabricated from steel sheet.
      a. Profile: Manufacturer's standard profile for conditions present.
      b. Material: As required for material compatibility with panel sheet material.
F. Attachment:
   1. Concealed System: Provide manufacturer's standard stainless steel concealed anchor clips designed for specific roofing system and engineered to meet performance requirements, including anticipated thermal movement.

PART 3 EXECUTION

3.1 EXAMINATION
   A. Verify existing conditions meet the manufacturer's requirements before starting work.

3.2 PREPARATION
   A. Prepare surfaces to receive work in accordance with manufacturer's instructions.

3.3 INSTALLATION
   A. General: Install all materials in accordance with manufacturer's instructions based on conditions present.
   B. Coordinate with installation of associated counterflashings and other components installed under other sections.

3.4 CLEANING
   A. Clean exposed sheet metal work at completion of installation. Remove grease and oil films, excess joint sealer, handling marks, and debris from installation, leaving the work clean and unmarked, free from dents, creases, waves, scratch marks, or other damage to the finish.

3.5 PROTECTION
   A. Protect installed work as required by the manufacturer to maintain product performance, design criteria, and warranty.

END OF SECTION

SECTION 074646 - FIBER-CEMENT SIDING

PART 1 GENERAL

1.1 SECTION INCLUDES
- A. Fiber-cement siding.

1.2 RELATED REQUIREMENTS
- A. Section 061000 - Rough Carpentry: Siding substrate.
- B. Section 072500 - Weather Barriers: Water-resistive barrier under siding.
- C. Section 079005 - Joint Sealers: Sealing joints between siding and adjacent construction and fixtures.
- D. Section 092116 - Gypsum Board Assemblies: Water-resistive barrier under siding.

1.3 REFERENCE STANDARDS
- A. ASTM C1186 - Standard Specification for Flat Fiber-Cement Sheets 2022, with Editorial Revision (2023).

1.4 SUBMITTALS
- A. See Section 013100 - Project Management and Coordination for submittal procedures.
- B. Product Data: Submit manufacturer's data sheets on each product to be used, including:
  1. Manufacturer's requirements for related materials to be installed by others.
  2. Preparation instructions and recommendations.
  3. Storage and handling requirements and recommendations.
  4. Installation methods, including nail patterns.
- C. Shop Drawings: Indicate dimensions, layout, joints, construction details, support clips, and methods of anchorage.
- D. Installer's qualification statement.

1.5 QUALITY ASSURANCE
- A. Installer Qualifications: Company specializing in performing work of type specified in this section with not less than three years of experience.

1.6 DELIVERY, STORAGE, AND HANDLING
- A. Deliver and store materials in manufacturer's unopened packaging, with labels intact, until ready for installation.
- B. Store materials under dry and waterproof cover, well ventilated, and elevated above grade on a flat surface.

1.7 FIELD CONDITIONS
- A. Do not install panels when air temperature or relative humidity are outside manufacturer's limits.

1.8 WARRANTY
- A. Extended Correction Period: Correct defective work within 2-year period commencing on Date of Substantial Completion.
- B. Manufacturer Warranty: Provide manufacturer warranty for years as indicated under Fiber-Cement Siding article sub-headings for "Warranty". Complete forms in Owner's name and register with manufacturer.

PART 2 PRODUCTS

2.1 FIBER-CEMENT SIDING
- A. Lap Siding: Individual horizontal boards made of cement and cellulose fiber formed under high pressure with integral surface texture, complying with ASTM C1186, Type A, Grade II; with machined edges, for nail attachment. Provide BoD: James Hardie, or approved equal to match existing pattern.
  1. Style: Standard lap style.
  2. Texture: Cedarmill.
  3. Length: 12 feet (3.7 m), nominal.
  4. Width (Height): 6-1/4 inches (159 mm) to 6-1/2 inches (165 mm) wide to match existing.

5. Thickness: 5/16 inch (8 mm), nominal, to match existing.
6. Finish: Factory primed.
7. Warranty: 50 year limited; transferable.

B. Panel Siding: Vertically oriented panels made of cement and cellulose fiber formed under high pressure with integral surface texture, complying with ASTM C1186, Type A, Grade II; with machined edges, for nail attachment.
1. Vertical pattern: 48-inch wide sheets with wood-grain texture and grooves 12 inches o.c. Align panels to reveals as noted in drawings.
2. Battens: Batten Board Rustic 2.50" wide and 3/4" thick.
3. Trim: Batten Board Rustic 2.50" wide and 3/4" thick.
4. Length (Height): 96 inches (2400 mm), nominal.
5. Width: 48 inches (1220 mm).
6. Thickness: 5/16 inch (8 mm), nominal, to match match existing.
7. Finish: Factory primed for painting.
8. Warranty: 50 year limited; transferable.

2.2 METAL TRIM AND REVEALS

A. Manufacturers: Subject to compliance with requirements, provide products by one of the following:
1. Fry Reglet.

B. Aluminum is to be extruded alloy 6063 T5.

C. Provide these shapes throughout:
1. J-Channel.
2. Inside Corner.
3. Outside Corner.
4. Horizontal.

2.3 ACCESSORIES

A. Colors for Decorative Accessories: As selected by Architect from manufacturer's full range of industry colors.

B. Flashing: Provide aluminum flashing complying with Section 076200 - Sheet Metal Flashing and Trim at window and door heads and where indicated.
1. Finish for Aluminum Flashing: Factory-prime coating.

C. Fasteners:
1. For fastening to wood, use ribbed bugle-head screws of sufficient length to penetrate a minimum of 1 inch into substrate.
2. For fastening to metal, use ribbed bugle-head screws of sufficient length to penetrate a minimum of 1/4 inch, or three screw-threads, into substrate.
3. For fastening fiber cement, use hot-dip galvanized fasteners.

D. Trim: Same material and texture as siding.

E. Fasteners: Galvanized or corrosion resistant; length as required to penetrate, 1-1/4 inches (31.8 mm), minimum.

PART 3 EXECUTION

3.1 EXAMINATION

A. Examine substrate, clean and repair as required to eliminate conditions that would be detrimental to proper installation.

B. Do not begin until unacceptable conditions have been corrected.

C. If substrate preparation is responsibility of another installer, notify Architect of unsatisfactory preparation before proceeding.

3.2 PREPARATION

A. Protect surrounding areas and adjacent surfaces during execution of this work.

3.3 INSTALLATION

A. Install in accordance with manufacturer's instructions and recommendations.
   1. Read warranty and comply with terms necessary to maintain warranty coverage.
   2. Use trim details as indicated on drawings.
   3. Touch up field cut edges before installing.
   4. Pre-drill nail holes if necessary to prevent breakage.

B. Joints in Horizontal Siding: Avoid joints in lap siding except at corners; where joints are inevitable stagger joints between successive courses.

C. Do not install siding less than 6 inches (152 mm) from ground surface, or closer than 1 inch (25.4 mm) to roofs, patios, porches, and other surfaces where water may collect.

D. After installation, seal joints except lap joints of lap siding; seal around penetrations, and paint exposed cut edges.

3.4 CLEANING

A. Clean faced panels in accordance with manufacturer’s maintenance instructions, using cleaning materials and methods acceptable to manufacturer.

3.5 PROTECTION

A. Protect installed products until Date of Substantial Completion.

B. Touch-up, repair or replace damaged products before Date of Substantial Completion.

END OF SECTION

SECTION 076200 - SHEET METAL FLASHING AND TRIM

PART 1 GENERAL

1.1 SECTION INCLUDES
- A. Fabricated sheet metal items.

1.2 RELATED REQUIREMENTS
- A. 072500 - Weather Barriers: Moisture protection and underlayments under sheet metal flashings.
- B. 079005 - Joint Sealers: Sealants installed with sheet metal flashing and trim.

1.3 ADMINISTRATIVE REQUIREMENTS
- A. Preinstallation Meeting: Convene one week before starting work of this section in accordance with Section 013100 - Project Management and Coordination.
  1. Review preparation and installation procedures and coordinating and scheduling required with related work.

1.4 SUBMITTALS
- A. Qualification Data: For fabricator.
- B. Shop Drawings: Indicate material profile, jointing locations, jointing details, fastening methods, flashings, terminations, and installation details. Show layouts of sheet metal flashing and trim, including plans and elevations. Distinguish between shop and field assembled work. Include the following:
  1. Identify material, thickness, weight, and finish for each item and location in Project.
  2. Details for forming sheet metal flashing and trim, including profiles, shapes, seams, and dimensions.
  3. Details for fastening, joining, supporting, and anchoring sheet metal flashing and trim, including fasteners to adjoining work.
- C. Samples:
  1. Finish Sample: Submit two samples illustrating each metal finish color.
  2. Fabrication Sample: Submit sample of coping lap joint as it will occur every 10 feet.
- D. Warranty: Submit manufacturer finish warranty and ensure forms have been completed in Owner's name and registered with manufacturer.

1.5 QUALITY ASSURANCE
- A. Fabricators Qualifications: Company specializing in performing the work of this section with minimum 5 years of experience on projects of similar size and complexity.

1.6 DELIVERY, STORAGE, AND HANDLING
- A. As required by the manufacturer for a warrantable installation of the installed products to meet the Performance and Design Criteria.

PART 2 PRODUCTS

2.1 DESCRIPTION
- A. Sheet metal including steel, stainless steel, and aluminum fabricated into items such as flashings, counterflashings, gutters, downspouts, and other items indicated and scheduled.

2.2 PERFORMANCE AND DESIGN CRITERIA
- A. General: Install sheet metal flashing and coping to withstand wind loads, structural movement, thermally induced movement, and exposure to weather without failing, rattling, leaking, and fastener disengagement.
- B. Thermal Movements: Provide sheet metal flashing and trim that allow for thermal movements resulting from the following maximum change (range) in ambient and surface temperatures by preventing buckling, opening of joints, hole elongation, overstressing of components, failure of joint sealants, failure of connections, and other detrimental effects.
  1. Temperature Change (Range): 120 deg, ambient; material surfaces.

2.3 MATERIALS

A. Pre-Finished Galvanized Steel: ASTM A653/A653M, with G90/Z275 zinc coating; minimum 0.024 inch, unless otherwise noted, thick base metal, shop pre-coated with PVDF coating.
   1. Fluoropolymer Coating: Superior Performance Organic Finish, AAMA 2605; multiple coat, thermally cured fluoropolymer finish system.
   2. Color: As scheduled below and indicated on drawings.
B. Sealant Type: Pressure-sensitive, 100 percent solids, gray polyisobutylene compound sealant tape with release-paper backing. Provide permanently elastic, nonsag, nontoxic, nonstaining tape 1/2" wide and 1/8" thick.
C. Elastomeric Sealant: ASTM C920, elastomeric polyurethane polymer sealant; low modulus; of type, grade, class and use classifications required to seal joints in sheet metal flashing and trim and remain watertight.
D. Butyl Sealant: ASTM C1311, single-component, solvent-release butyl rubber sealant; polyisobutylene plasticized, heavy-bodied for hooked-type expansion joints with limited movement.
E. Epoxy Seam Sealer: Two-part, noncorrosive, seam-cementing compound; recommended by aluminum manufacturer for exterior nonmoving joints, including riveted joints.
F. Bituminous Coating: Cold-applied asphalt emulsion complying with ASTM D1187.
G. Asphalt Roofing Cement: ASTM D4586, asbestos free, of consistency required for application.

2.4 FABRICATION

A. Conform to referenced SMACNA manual, Manufacturer's recommendations if premanufactured and as detailed. Conform to following general requirements:
B. Form sections true to shape, accurate in size, square, and free from distortion or defects.
C. Form pieces in longest possible lengths.
D. Fabricate corners from one piece with minimum 18 inch long legs; seam for rigidity, seal with sealant.
E. Fabricate vertical faces with bottom edge formed outward 1/4 inch and hemmed to form drip.
F. Hem exposed edges 1/2 inch on unexposed side, miter and seam corners, unless noted otherwise.
G. Cleats: Fabricate continuous cleats and starter strips from one gauge heavier material than sheet metal material, in widths required by SMACNA, interlockable with sheet.
H. Sealed Joints: Form non-expansion, but movable, joints in metal to accommodate elastomeric sealant to comply with SMACNA standards.
I. Expansion Provisions: Space movement joints at maximum of 10 feet with no joints allowed within 24 inches of corner or intersection, and as required by SMACNA. Where lapped or bayonet-type expansion provisions in work cannot be used or would not be sufficiently weatherproof and waterproof, form expansion joints of intermeshing hooked flanges, not less than 1 inch deep, filled with mastic sealant (concealed within joints).
J. Shingle laps in flashings: 6-inch minimum, sealed with two distinct beads of bib-skinning butyl sealant at each lap.

2.5 ACCESSORIES

A. All accessory materials required by the manufacturer for a warrantable installation of the installed products in a manner that meets the Performance and Design Criteria.
B. Gutters and Downspouts:
   1. General: Same metal as flashing with precoated finish, 26 gauge thickness.
   2. Gutters: Prefinished metal hanging type gutter, box style profile as shown on drawings. Paint galvanized metal hanger to match gutter. Profile and paint to match existing.
   3. Downspouts: 3 inch diameter round profile, to match existing.
C. Protective Backing Paint: See Section 099123 - Interior Painting.
D. Sealant: As specified in Section 079005 - Joint Sealers.

PART 3 EXECUTION

3.1 EXAMINATION

A. Verify existing conditions meet the manufacturer's requirements before starting work.

B. Examine substrates, areas, and conditions, with Installer present, to verify actual locations, dimensions and other conditions affecting performance of the Work.

1. Verify compliance with requirements for installation tolerances of substrates.
2. Verify that substrate is sound, dry, smooth, clean, sloped for drainage, and securely anchored.

C. For the record, prepare written report, endorsed by Installer, listing conditions detrimental to performance of the Work.

D. Proceed with installation only after unsatisfactory conditions have been corrected.

3.2 PREPARATION

A. Prepare surfaces to receive work in accordance with manufacturer's instructions.

3.3 INSTALLATION

A. General: Install all materials in accordance with manufacturer's instructions based on conditions present.

B. General: Anchor sheet metal flashing and trim and other components of the Work securely in place, with provisions for thermal and structural movement. Use fasteners, solder, welding rods, protective coatings, separators, sealants, and other miscellaneous items as required to complete sheet metal flashing and trim system.

1. Install sheet metal flashing and trim true to line and levels indicated. Provide uniform, neat seams with minimum exposure of solder, welds, and sealant.
2. Install sheet metal flashing and trim to fit substrates and to result in watertight performance. Verify shapes and dimensions of surfaces to be covered before fabricating sheet metal.
3. Space cleats not more than 12 inches apart. Anchor each cleat with two fasteners. Bend tabs over fasteners.
4. Install exposed sheet metal flashing and trim without excessive oil canning, buckling, and tool marks.
5. Install sealant tape where indicated.
6. Torch cutting of sheet metal flashing and trim is not permitted.
7. Do not use graphite pencils to mark metal surfaces.

C. Metal Protection: Where dissimilar metals will contact each other or corrosive substrates, protect against galvanic action by painting contact surfaces with bituminous coating or by other permanent separation as recommended by SMACNA.

1. Coat back side of stainless-steel sheet metal flashing and trim with bituminous coating where flashing and trim will contact wood, ferrous metal, or cementitious construction.

D. Expansion Provisions: Provide for thermal expansion of exposed flashing and trim. Space movement joints at a maximum of 10 feet with no joints allowed within 24 inches of corner or intersection. Where lapped expansion provisions cannot be used or would not be sufficiently watertight, form expansion joints of intermeshing hooked flanges, not less than 1 inch deep, filled with sealant concealed within joints.

E. Fastener Sizes: Use fasteners of sizes that will penetrate wood sheathing not less than 1-1/4 inches for nails and not less than 3/4 inch for wood screws not less than recommended by fastener manufacturer to achieve maximum pull-out resistance.

F. Seal joints as shown and as required for watertight construction.

1. Where sealant-filled joints are used, embed hooked flanges of joint members not less than 1 inch into sealant. Form joints to completely conceal sealant. When ambient temperature at time of installation is moderate, between 40 and 70 deg F, set joint members for 50 percent movement each way. Adjust setting proportionately for installation at higher

ambient temperatures. Do not install sealant-type joints at temperatures below 40 deg F.

2. Prepare joints and apply sealants to comply with requirements in Section 079005 - Joint Sealers.

G. Soldered Joints: Clean surfaces to be soldered, removing oils and foreign matter. Pre-tin edges of sheets to be soldered to a width of 1-1/2 inches, except reduce pre-tinning where pre-tinned surface would show in completed Work.

1. Do not use torches for soldering. Heat surfaces to receive solder and flow solder into joint. Fill joint completely. Completely remove flux and spatter from exposed surfaces.

3.4 ROOF FLASHING INSTALLATION

A. General: Install sheet metal flashing and trim to comply with performance requirements and SMACNA's "Architectural Sheet Metal Manual." Provide concealed fasteners where possible, set units true to line, and level as indicated. Install work with laps, joints, and seams that will be permanently watertight and weather resistant.

B. Roof Edge Flashing: Anchor to resist uplift and outward forces according to recommendations in SMACNA's "Architectural Sheet Metal Manual" and as indicated. Interlock bottom edge of roof edge flashing with continuous cleat anchored to substrate at centers.

C. Roof-Penetration Flashing: Coordinate installation of roof-penetration flashing with installation of roofing and other items penetrating roof. Seal with elastomeric sealant and clamp flashing to pipes that penetrate roof.

3.5 MISCELLANEOUS FLASHING INSTALLATION

A. Equipment Support Flashing: Coordinate installation of equipment support flashing with installation of roofing and equipment. Weld or seal flashing with elastomeric sealant to equipment support member.

3.6 CLEANING AND PROTECTION

A. Clean exposed metal surfaces of substances that interfere with uniform oxidation and weathering.

B. Clean and neutralize flux materials. Clean off excess solder.

C. Clean off excess sealants.

D. Remove temporary protective coverings and strippable films as sheet metal flashing and trim are installed unless otherwise indicated in manufacturer's written installation instructions. On completion of installation, remove unused materials and clean finished surfaces. Maintain in a clean condition during construction.

E. Replace sheet metal flashing and trim that have been damaged or that have deteriorated beyond successful repair by finish touchup or similar minor repair procedures.

F. Protect installed work as required by the manufacturer to maintain product performance, design criteria, and warranty.

3.7 ERECTION TOLERANCES

A. Installation Tolerances: Shim and align sheet metal flashing and trim within installed tolerance of 1/4 inch in 20 feet on slope and location lines as indicated and within 1/8-inch offset of adjoining faces and of alignment of matching profiles.

B. Installation Tolerances: Shim and align sheet metal flashing and trim within installed tolerances specified in MCA's "Guide Specification for Residential Metal Roofing."

END OF SECTION

SECTION 078400 - FIRESTOPPING

PART 1 GENERAL

1.1 SECTION INCLUDES
- A. Penetration firestopping.
- B. Fire resistive joint systems.

1.2 RELATED REQUIREMENTS
- A. 092116 - Gypsum Board Assemblies: For fire rated assemblies requiring firestopping.
- B. Divisions 21-28: For items typically penetrating fire rated assemblies requiring firestopping.

1.3 ADMINISTRATIVE REQUIREMENTS
- A. Preinstallation Meeting: Convene one week before starting work of this section in accordance with Section 013100 - Project Management and Coordination.

1.4 SUBMITTALS
- A. Qualification Data: For manufacturer and fabricator.
- B. Product Data: Provide product criteria, characteristics, accessories, and jointing methods, and termination conditions.
- C. Shop Drawings: Indicate system design listing by UL, FM Research, Intertek Testing Services, Omega Point Laboratories (OPL).
  1. Where system design listing is not available for a particular configuration provide an Engineering Judgment (EJ) or Equivalent Fire Resistance Rated Assembly (EFRRA) for submittal
- D. Contractor Installation log.
- E. Manufacturer's Installation Instructions: Indicate special preparation of substrate, installation and attachment methods, and perimeter conditions requiring special attention.
- F. Maintenance Data: For user's operation and maintenance of system including:
  1. Methods for maintaining system's materials.

1.5 QUALITY ASSURANCE
- A. Manufacturer of firestop products shall have been successfully producing and supplying these products for a period of not less than 3 years, and be able to show evidence of at least 10 projects where similar products have been installed and accepted.
- B. Fabricators Qualifications: Company specializing in performing the work of this section with minimum 5 years of experience on projects of similar size and complexity.

1.6 MOCKUP
- A. Prior to installing firestopping, erect mockups for each different firestop system indicated to verify selections made and to demonstrate qualities of materials and execution. Build mockups to comply with the following requirements, using materials indicated for final installations.
  1. Locate mockups on site in locations indicated or, if not indicated, as directed by Owner.
  2. Retain and maintain mockups during construction in an undisturbed condition as a standard for judging completed unit of Work. Accepted mockups in an undisturbed condition at time of Substantial Completion may become part of completed unit of Work.

1.7 WARRANTY
- A. Installation Warranty: Contractor shall correct defective Work within a five year period after Date of Substantial Completion.
- B. Manufacturer Warranty: Provide five year warranty for firestopping systems.

PART 2 PRODUCTS

2.1 DESCRIPTION
- A. Interior Firestopping: Provide firestopping of all joints head of walls and penetrations in fire-resistance rated and smoke-resistant assemblies. Single source installer.

2.2 PERFORMANCE AND DESIGN CRITERIA

A. Penetrations: Provide firestopping systems that resist the spread of fire, and the passage of smoke and other gases according to requirements indicated:
   1. Firestop all penetrations passing through fire resistance rated wall and floor assemblies and other locations as indicated on the drawings.
   2. Provide complete penetration firestopping systems that have been tested and approved by third party testing agency.
   3. F - Rated Through-Penetration Firestop Systems: Provide through-penetration firestop systems with F ratings indicated, as determined per ASTM E814, but not less than one hour or the fire-resistance rating of the construction being penetrated.
   4. T - Rated Through-Penetration Firestop Systems: Provide firestop systems with T ratings, in addition to F ratings, as determined per ASTM E814, where indicated by Code.
   5. Provide T-Rating Collar Devices tested in accordance with ASTM E814 or ANSI/UL 1479 for metallic pipe penetrations requiring T-Ratings per the applicable building code.
   6. L - Rated Through-Penetration Firestop Systems: Provide firestop systems with L ratings, in addition to F and T ratings, as determined per UL 1479, where indicated by Code.
   7. W - Rated Through-Penetration Firestop Systems: Provide firestop systems with W Water Resistance ratings, in addition to F, T and L ratings, as determined per UL 1479, where indicated.

B. Perimeter Fire Containment Systems: Provide interior perimeter joint systems with fire-resistance ratings indicated, as determined per ASTM E2307, but not less than the fire-resistance rating of the floor construction.

C. Fire-Resistive Joints: Provide joint systems with fire-resistance ratings indicated, as determined per UL 2079, but not less than the fire-resistance rating of the construction in which the joint occurs.

D. For firestopping exposed to view, traffic, moisture, and physical damage, provide appropriate firestop systems for these conditions.
   1. Exposed to view firestopping must be paintable.

E. Firestop material must be able to be installed per manufacturers written instructions in temperatures ranging from 35 degrees F to 120 degrees F, and have the ability to be frozen, thawed and still comply with its UL designation and testing results.

F. Provide products that upon curing, do not re-emulsify, dissolve, leach, breakdown or otherwise deteriorate over time from exposure to atmospheric moisture, sweating pipes, ponding water or other forms of moisture characteristic during and after construction.

G. Movement:
   1. Provide firestop sealants and fire resistive joint sealants sufficiently flexible to accommodate motion such as pipe vibration, water hammer, thermal expansion and other normal building movement without damage to the seal.
   2. Provide fire-resistive joint sealants designed to accommodate a specific range of movement and tested for this purpose in accordance with a cyclic movement test criteria as outlined in Standards, ASTM E-1399, ASTM E1966, or ANSI/ UL 2079.

H. Pipe insulation shall not be removed, cut away or otherwise interrupted through wall or floor openings. Provide products appropriately tested for the thickness and type of insulation utilized.

I. Fire rated pathway devices shall be the preferred product and shall be installed in all locations where frequent cable moves, add-ons and changes will occur.

J. When mechanical cable pathways are not practical, openings within walls and floors designed to accommodate voice, data and video cabling shall be provided with re-enterable products specifically designed for retrofit.

K. Penetrants passing through fire-resistance rated floor-ceiling assemblies contained within chase wall assemblies shall be protected with products tested by being fully exposed to the fire

outside of the chase wall. Systems within the UL Fire Resistance Directory that meet this criterion are identified with the words “Chase Wall Optional”.

L. Provide penetration firestop systems, fire-resistive joint systems, or perimeter fire barrier systems subjected to an air leakage test conducted in accordance with Standard, ANSI/ UL 1479 for penetrations and ANSI/UL 2079 for joint systems with published L-Ratings for ambient and elevated temperatures as evidence of the ability of firestop system to restrict the movement of smoke.

2.3 MANUFACTURERS

A. Basis of Design: 3M Fire Protection Products as listed in assemblies shown on Drawings or approved equal.
   1. Comparable products by one of the following are also acceptable. See Section 016000 - Product Requirements.

B. Manufacturers: Subject to compliance with requirements, provide products by one of the following:
   1. Grace Construction Products.
   2. 3M Fire Protection Products.
   3. Tremco, Inc.: Tremco Fire Protection Systems Group.
   4. USG Corporation.

2.4 ACCESSORIES

A. All accessory materials required by the manufacturer for a warrantable installation of the installed products in a manner that meets the Performance and Design Criteria.

PART 3 EXECUTION

3.1 EXAMINATION

A. Examine substrates and conditions for compliance with requirements for opening configurations, penetrating items, substrates, and other conditions affecting performance of firestopping.

3.2 PREPARATION

A. Priming: Prime substrates where recommended by firestopping manufacturer using that manufacturer's recommended products and methods. Confine primers to areas of bond. Do not allow spillage and migration onto exposed surfaces.

B. Masking Tape: Use masking tape to prevent firestopping from contacting adjoining surfaces that will remain exposed. Remove tape as soon as it is possible to do so without disturbing the firestopping seal with substrates.

C. Verify that system components are clean, dry, and ready for installation.

D. Verify that field dimensions are as shown on the Drawings and as recommended by the manufacturer.

3.3 PENETRATION FIRESTOP INSTALLATION

A. Ensure that all pipes, conduit, cable, and other items, which penetrate fire rated construction, have been permanently installed prior to installation of firestop assemblies.

B. Ensure that partitions and all other construction that conceal penetrations are not erected prior to the installation of firestop and smoke seals.

C. Install forming/damming materials and other accessories in accordance with manufacturers written instructions.

D. Install fill materials for through-penetration firestop systems by proven techniques to produce the following results:
   1. Completely fill voids and cavities formed by openings, forming materials, accessories, and penetrating items.
   2. Install materials so they contact and adhere to substrates formed by openings and penetrating items.
   3. For fill materials that will remain exposed finish to produce smooth, uniform surfaces.

3.4 FIRESTOP JOINT SYSTEM INSTALLATION

A. Install joint fillers to provide support of firestop materials during application.

B. Provide at the position to produce the cross-sectional shapes and depths of installed firestop material relative to joint widths for optimum sealant movement capability and required fire-resistance.

C. Install systems that result in firestop materials:

1. Directly contacting and fully wetting joint substrates.
2. Completely filling recesses provided for each joint configuration.
3. Providing uniform, cross-sectional shapes and depths relative to joint width that optimize movement capability.

D. Tool non-sag firestop materials immediately after application and prior to skinning begins. Form smooth, uniform beads of configuration indicated or required to:

1. Produce fire-resistance rating.
2. Eliminate air pockets.
3. Ensure contact and adhesion with sides of joint.

3.5 INSTALLATION LOG

A. Include the following items for all firestop and fire resistive joint installations:

1. Contractor’s name, address, and phone number.
2. Through-penetration firestop systems designation of applicable testing and inspecting agency.
3. Date of installation.
4. Firestop systems manufacturer’s name.

B. Provide as a pdf file with bi-directional links to floor plans and elevations to clearly illustrate location of material.

3.6 IDENTIFICATION

A. Identify through-penetration firestop systems with pressure-sensitive, self-adhesive, preprinted vinyl labels. Attach labels permanently to surfaces of penetrated construction on both sides of each firestop system installation where labels will be visible to anyone seeking to remove penetrating items or firestop systems.

3.7 CLEANING

A. Clean off excess fill materials and sealants adjacent to openings and joints as work progresses. Use methods and cleaning materials approved by manufacturers of firestopping products and or assemblies in which openings and joints occur.

B. Protect firestopping during and after curing period from contact with contaminating substances.

3.8 SCHEDULE

A. Refer to assemblies on drawings.

END OF SECTION

SECTION 079005 - JOINT SEALERS

PART 1 GENERAL

1.1 SECTION INCLUDES
- A. Urethane joint sealants.
- B. Latex joint sealants.

1.2 RELATED REQUIREMENTS
- A. 016000 - Product Requirements: For substitution and additional product requirements.

1.3 SUBMITTALS
- A. Qualification Data: For Manufacturer, Installer, Testing Agency.
- B. Product Data: Provide data indicating sealant chemical characteristics, performance criteria, substrate preparation, limitations, and color availability.
- C. Preliminary Selection Sample: Manufacturer's color charts consisting of strips of cured sealants showing the full range of colors available for each product exposed to view.
- D. Manufacturer's Installation Instructions: Indicate special preparation of substrate, installation and attachment methods, and perimeter conditions requiring special attention.
- E. Compatibility and Adhesion Test Reports: From sealant manufacturer, indicating the following:
  1. Materials forming joint substrates and joint-sealant backings have been tested for compatibility and adhesion with joint sealants.
  2. Interpretation of test results and written recommendations for primers and substrate preparation needed for adhesion.
- F. Field Test Report Log: For each elastomeric sealant application.
- G. Product Test Reports: Based on comprehensive testing of product formulations performed by a qualified testing agency, indicating that sealants comply with requirements.
- H. Warranty: Submit manufacturer warranty and ensure forms have been completed in Owner's name and registered with manufacturer.
- I. Maintenance Data: For user's operation and maintenance of system including:
  1. Methods for maintaining system's materials and finishes.
  2. Precautions about cleaning materials and methods that could be detrimental to components, finishes, and performance.
  3. Recommendations on maintenance schedule.

1.4 QUALITY ASSURANCE
- A. Manufacturer Qualifications: Company specializing in the manufacture of work specified in this section with minimum 5 years of experience.
- B. Installer Qualifications: Manufacturer's authorized Installer who is approved or licensed for installation of elastomeric sealants required for this Project. Minimum 5 years of documented experience in facilities of this size and scope.
  1. Prequalification of single source installers for exterior sealants is encouraged.
- C. Source Limitations: Obtain each type of joint sealant through one source from a single manufacturer.

1.5 DELIVERY, STORAGE, AND HANDLING
- A. As required by the manufacturer for a warrantable installation of the installed products to meet the Performance and Design Criteria.

1.6 WARRANTY
- A. Special Installer's Warranty: Installer's standard form in which Installer agrees to repair or replace elastomeric joint sealants that do not comply with performance and other requirements specified in this Section within specified warranty period.
  1. Warranty Period: Two years from date of Substantial Completion.
- B. Special Manufacturer's Warranty: Manufacturer's standard form in which elastomeric sealant manufacturer agrees to furnish elastomeric joint sealants to repair or replace those that do not

comply with performance and other requirements specified in this Section within specified warranty period.
1. Warranty Period: Ten (10) years from date of Substantial Completion.

C. Special warranties exclude deterioration or failure of elastomeric joint sealants from the following:
1. Movement of the structure resulting in stresses on the sealant exceeding sealant manufacturer's written specifications for sealant elongation and compression caused by structural settlement or errors attributable to design or construction.
2. Disintegration of joint substrates from natural causes exceeding design specifications.
3. Mechanical damage caused by individuals, tools, or other outside agents.
4. Changes in sealant appearance caused by accumulation of dirt or other atmospheric contaminants.

PART 2 PRODUCTS

2.1 DESCRIPTION

2.2 PERFORMANCE AND DESIGN CRITERIA

A. Compatibility: Provide joint sealants, backings, and other related materials that are compatible with one another and with joint substrates under conditions of service and application, as demonstrated by sealant manufacturer, based on testing and field experience.

B. Colors of Exposed Joint Sealants: As selected by Architect from manufacturer's full range.

C. VOC Content of Interior Sealants: Provide sealants and sealant primers for use inside the weatherproofing system that comply with the following limits for VOC content when calculated according to 40 CFR 59, Part 59, Subpart D (EPA Method 24):
1. Architectural Sealants: 250 g/L.
2. Sealant Primers for Nonporous Substrates: 250 g/L.
3. Sealant Primers for Porous Substrates: 775 g/L.

D. Stain-Test-Response Characteristics: Where elastomeric sealants are specified to be nonstaining to porous substrates, provide products that have undergone testing according to ASTM C1248 and have not stained porous joint substrates indicated for Project.

2.3 URETHANE JOINT SEALANTS

A. Multicomponent, Nonsag, Traffic-Grade, Urethane Joint Sealant: ASTM C 920, Type M, Grade NS, Class 50, for Use T.

B. Products: Subject to compliance with requirements, available products that may be incorporated into the Work include, but are not limited to, the following:
1. Polymeric Systems, Inc.; PSI-270.
2. Tremco Incorporated; Dymeric 240 FC.

2.4 LATEX JOINT SEALANTS

A. Latex Joint Sealant: Acrylic latex or siliconized acrylic latex, ASTM C 834, Type OP, Grade NF.
1. Products: Subject to compliance with requirements, available products that may be incorporated into the Work include, but are not limited to, the following:
a. BASF Building Systems; Sonolac.
b. Bostik, Inc.; Chem-Calk 600.
c. Pecora Corporation; AC-20+.
d. Tremco Incorporated; Tremflex 834.

2.5 ACCESSORIES

A. Joint sealant backing:
1. General:
a. Provide sealant backings of material and type that are nonstaining; are compatible with joint substrates, sealants, primers, and other joint fillers; and are approved for applications indicated by sealant manufacturer based on field experience and

laboratory testing.

2. Bond-Breaker Tape:
   a. Polyethylene tape or other plastic tape recommended by sealant manufacturer for preventing sealant from adhering to rigid, inflexible joint-filler materials or joint surfaces at back of joint where such adhesion would result in sealant failure. Provide self-adhesive tape where applicable.

B. Miscellaneous Materials:
   1. Primer:
      a. Material recommended by joint-sealant manufacturer where required for adhesion of sealant to joint substrates indicated, as determined from preconstruction joint-sealant-substrate tests and field tests.
   2. Cleaners for Nonporous Surfaces:
      a. Chemical cleaners acceptable to manufacturers of sealants and sealant backing materials, free of oily residues or other substances capable of staining or harming joint substrates and adjacent nonporous surfaces in any way, and formulated to promote optimum adhesion of sealants to joint substrates.
   3. Masking Tape:
      a. Non-staining, nonabsorbent material compatible with joint sealants and surfaces adjacent to joints.

C. All accessory materials required by the manufacturer for a warrantable installation of the installed products in a manner that meets the Performance and Design Criteria.

PART 3 EXECUTION

3.1 EXAMINATION

A. Verify existing conditions meet the manufacturer's requirements before starting work.

3.2 PREPARATION

A. Prepare surfaces to receive work in accordance with manufacturer's instructions.

3.3 INSTALLATION

A. General: Install all materials in accordance with manufacturer's instructions based on conditions present.

3.4 FIELD QUALITY CONTROL

A. Field quality control to include field adhesion testing, field stain testing, test methods and evaluation of field test results.

B. Perform all corrections necessary for issuance of warranty.

3.5 PROTECTION

A. Protect installed work as required by the manufacturer to maintain product performance, design criteria, and warranty.

END OF SECTION

SECTION 081113 - HOLLOW METAL DOORS AND FRAMES

PART 1 GENERAL

1.1 SECTION INCLUDES
- A. Hollow metal frames for wood doors.
- B. Exterior hollow metal doors and frames.
- C. Accessories, including glazing, louvers, and matching panels.

1.2 REFERENCE STANDARDS
- A. ANSI/SDI A250.8 - Specifications for Standard Steel Doors and Frames (SDI-100) 2023.
- B. NAAMM HMMA 840 - Guide Specifications For Receipt, Storage and Installation of Hollow Metal Doors and Frames 2017.
- C. NAAMM HMMA 861 - Guide Specifications for Commercial Hollow Metal Doors and Frames 2014.
- D. SDI 117 - Manufacturing Tolerances for Standard Steel Doors and Frames 2023.

1.3 SUBMITTALS
- A. See Section 013100 - Project Management and Coordination for submittal procedures.
- B. Product Data: Materials and details of design and construction, hardware locations, reinforcement type and locations, anchorage and fastening methods, and finishes; and one copy of referenced standards/guidelines.
- C. Shop Drawings: Details of each opening, showing elevations, glazing, frame profiles, and any indicated finish requirements.
- D. Installation Instructions: Manufacturer's published instructions, including any special installation instructions relating to this project.

1.4 QUALITY ASSURANCE
- A. Manufacturer Qualifications: Company specializing in manufacturing products specified in this section, with not less than three years documented experience.
- B. Installer Qualifications: Company specializing in performing work of the type specified and with at least three years of documented experience.
- C. Maintain at project site copies of reference standards relating to installation of products specified.

1.5 DELIVERY, STORAGE, AND HANDLING
- A. Comply with NAAMM HMMA 840 or ANSI/SDI A250.8 (SDI-100) in accordance with specified requirements.
- B. Protect with resilient packaging; avoid humidity build-up under coverings; prevent corrosion and adverse effects on factory applied painted finish.

1.6 PROJECT CONDITIONS
- A. Field Measurements: Verify actual dimensions of openings by fiels measurements before fabrication.

1.7 COORDINATION
- A. Coordinate installation of anchorages for hollow metal frames. Furnish setting drawings, templates, and directions for installing anchorages, including sleeves, concrete inserts, anchor bolts, and items with integral anchors. Deliver such items to project site in time for installation.
  1. Physical performance: Level A according to SDI A250.4.
  2. Doors:
     - a. Type: As indicated in the Door and Frame Schedule.
     - b. Thickness: 1-3/4"
     - c. Face: Metallic-coated, cold-rolled steel sheet, minimum thickness of 0.032".
     - d. Edge Construction: Continuously welded with no visible seam.
     - e. Core: Steel-stiffened.

f. Minimum 18 gage steel with both lock and hinge rail edge of intermittently welded, filled and ground smooth the full height of the door.
1) Ceco: Regent -- 18 SEM.
2) Curries: 707N - 18.

3. Frames:
a. Materials: Metallic-coated steel sheet, minimum thickness of 0.053" for frames that receive hollow-metal doors; minimum thickness of 0.042" for frames that receive hollow-core wood doors.
b. Construction: Full profile welded.

4. Exposed Finish: Prime.

PART 2 PRODUCTS

2.1 MANUFACTURERS

A. Hollow Metal Frames:
1. Ceco Door, an Assa Abloy Group company.
2. Curries Company.

2.2 REGULATORY REQUIREMENTS

A. Fire-rated assemblies: Complying with NFPA 80 and listed nad labeled by a qualified testing agency acceptable to authorities having jurisdiction for fire-protection ratings indicated, based on testing at positive pressure according to NFPA 252 or UL 10C.

2.3 HOLLOW METAL FRAMES

A. Comply with standards and/or custom guidelines as indicated for corresponding door in accordance with applicable door frame requirements.

2.4 INTERIOR DOORS AND FRAMES

A. Construct interior doors and frames to comply with the standards indicated for materials, fabrication, hardware locations, hardware reinforcement, tolerances and clearances, and as applied.
B. Hollow-Metal Doors and Frames: NAAMM-HMMA 860. At locations indicated in the Door and Frame Schedule.
1. Physical Performance: Level A according to SDI A250.4
2. Doors;
a. Type: As indicated in the Door and Frame Schedule.
b. Thickness: 1-3/4 inches.
c. Face: Metallic-coated, cold-rolled steel sheet, minimum thickness of 0.032 inch.
d. Edge Construction: Continuousl welded with no visible seam.
e. Core: Steel stiffened.
f. Minimum 18 guage steel with both lock and hinge rail edge of intermittently welded, filled and ground smooth the full height of the door.
1) Ceco: Regent - 18 SEM
2) Curries: 707N-18

3. Frames:
a. Materials: Metallic-coated steel sheet, minimum thickness of 0.053 inch for frames that receive hollow-metal doors; minimum thickness of 0.042 inch for frames that receive hollow-core wood doors.
b. Construction: Full profile welded.

2.5 EXTERIOR HOLLOW-METAL DOORS AND FRAMES

A. Construct exterior doors and frames to comply with the standards indicated for materials, fabrication, hardware locations, hardware reinforcement, tolerances and clearances, and as specified.
B. Hollow-Metal Doors and Frames: NAAMM-HMMA 860. At locations indicated in the Door and Frames Schedule.

1. Physical Performance: Level A according to SDI A250.4
2. Doors:
   a. Type: As indicated in Door and Frame schedule.
   b. Thickness: 1-3/4 inches.
   c. Face: Metallic-coated steel sheet, minimum thickness of 0.042", with minimum G60A60 coating.
   d. Edge Construction: Continuously welded with no visible seam.
   e. Core: Steel stiffened.
   f. Minimum 16 gage steel.
      1) Ceco: Medallion - 16.
      2) Curries: 747 T-16.

C. Frames:
1. Materials: Metallic-coated steel sheet, minimum thickness of 0.053", with minimum G60A60 coating.
2. Construction: Full profile welded.

D. Exposed Finish: Prime.

2.6 FABRICATION

A. Fabricate hollow-metal work to be rigid and free of defects, warp, or buckle. Accurately form metal to required sizes and profiels, within minimum radius for metal thickness. Where practical, fit and assemble units in manufacturer's plant. To ensure proper assembly at Project site, clearly identify work that cannot be permanently factory assembled before shipment.

B. Tolerances: Fabricate hollow metal work to tolerances indicated in SDI 117.

C. Hollow-Metal Doors:
1. Exterior Doors: Provide weep-hole openings in the bottom of exterior doors to permit moisture to escape. Seal joints in top edges of doors against water penetration.
2. Glazed Lites: Factory cut openings in doors.
3. Astragals: Provide overlapping astragal on one leaf of pairs of doors where required by NFPA 80 for fire-performance rating or where indicated. Extend minimum 3/4 inch beyond edge of door on which astragal is mounted.

D. Hollow Metal Frames: Where frames are fabricated in sections due to shipping or handling limitations, provide alignment plates or angles at each joing, fabricated of same thickness metal as frames.
1. Welded Frames: Weld flush face joints continuously; grind, fill, dress, and make smooth, flush, and invisible.
2. Provide countersunk, flat- or oval-head exposed screws and bolts for exposed fastener unless otherwise indicated.
3. Grout Guards: Weld guards to frame at back of hardware mortises in frames to be grouted.
4. Floor Anchors: Weld anchors to bottom of jambs and mullions with at least four spot welds per anchor.
5. Jamb Anchors: Provide number and spacing of anchors as follows:
   a. Stud-Wall Type: Locate anchors not more than 18 inches from top and bottom of frame. Space anchors not more than 32 inches o.c. and as follows:
      1) Three anchors per jamb up to 60 inches high.
      2) Four anchors per jamb from 60 to 90 inches high.
      3) Five anchors per jamb from 90 to 96 inches high.
      4) Five anchors per jamb plus 1 additional anchor per jamb for each 24 inches or fraction thereof above 96 inches high.
      5) Two anchors per head for frames above 42 inches wide and mounted in metal-stud partitions

E. Hardware Preparation: Factory prepare hollow metal work to receive templated mortised hardware; include cutouts, reinforcement, mortising, drilling, and tapping according to the Door Hardware Schedule and templates furnished as specified in Division 08 Section "Door Hardware".
   1. Locate hardware as indicated, or if not indicated, according to ANSI/SDI A250.8.
   2. Reinforce doors and frames to receive nontemplated, mortised and surface mounted door hardward.
   3. Comply with applicable requirements in ANSI/SDI A250.8 and ANSI/DHI A115 Series specifications for preparation of hollow metal work for hardware.
   4. Coordinate locations of conduit and wiring boxes for electrical connections with Division 26 sections.

F. Stops and Moldings: Provide stops and moldings around glazed lites where indicated. Form corners of stops and moldings with butted or mitered hairline joints.
   1. Single Glazed Lites: Provide fixed stops and moldings welded on secure side of hollow metal work.
   2. Multiple Glazed Lites: Provide fixed and removable stops and moldings so that each glazed lite is capable of being removed independently.
   3. Provide fixed frame moldings on outside of exterior and on secure side of interior doors and frames.
   4. Provide loose stops and moldings on inside of hollow metal work.
   5. Coordinate rabbet width between fixed and removable stops with type of glazing and type of installation indicated.

2.7 STEEL FINISHES

2.8 PRIME FINISH: CLEAN, PRETREAT, AND APPLY MANUFACTURER'S STANDARD PRIMER.
   1. Shop Primer: Manufacturer's standard, fast-curing, lead- and chromate-free primer complying with SDI A250.10; recommended by primer manufacturer for substrate; compatible with substrate and field-applied coatings despite prolonged exposure.

PART 3 EXECUTION

3.1 EXAMINATION

A. Examine substrates, areas, and conditions, with Installer present, for compliance with requirements for installation tolerances and other conditions affecting performance of Work.

B. Examine roughing-in for embedded and built-in anchors to verify actual locations before frame installation.

C. Prepare written report, endorsed by Installer, listing conditions detrimental to performance of the Work.

D. Proceed with installation only after unsatisfactory conditions have been corrected

3.2 INSTALLATION

A. Install doors and frames in accordance with manufacturer's instructions and related requirements of specified door and frame standards or custom guidelines indicated.

B. Coordinate frame anchor placement with wall construction.

3.3 TOLERANCES

A. Clearances Between Door and Frame: Comply with related requirements of specified frame standards or custom guidelines indicated in accordance with SDI 117 or NAAMM HMMA 861.

B. Maximum Diagonal Distortion: 1/16 inch (1.6 mm) measured with straight edge, corner to corner.

END OF SECTION

SECTION 081416 - FLUSH WOOD DOORS

PART 1 GENERAL

1.1 SECTION INCLUDES
- A. Fire rated wood door.

1.2 RELATED REQUIREMENTS
- A. 081113 - Hollow Metal Doors and Frames: For frames.
- B. 099123 - Interior Painting: For field painting.

1.3 SUBMITTALS
- A. Qualification Data: For manufacturer.
- B. Product Data: Materials and details of design and construction, hardware locations, reinforcement type and locations, anchorage and fastening methods, and finishes.
- C. Shop Drawings: Details of each opening, showing elevations, glazing, frame profiles.
- D. Sample: Submit two samples face material, manufacturer's standard size showing factory finishes, colors, and surface texture.
- E. Manufacturer's Installation Instructions: Indicate special preparation of substrate, installation and attachment methods, and perimeter conditions requiring special attention.
- F. Warranty: Submit manufacturer warranty and ensure forms have been completed in Owner's name and registered with manufacturer.
- G. Maintenance Data: For user's operation and maintenance of system including:
  1. Methods for maintaining system's materials and finishes.
  2. Precautions about cleaning materials and methods that could be detrimental to components, finishes, and performance.

1.4 QUALITY ASSURANCE
- A. Manufacturer Qualifications: Company specializing in manufacturing the products specified in this section with minimum three years of documented experience.
  1. Company with at least one project in the past 5 years with value of woodwork within 20 percent of cost of woodwork for this Project.

1.5 DELIVERY, STORAGE, AND HANDLING
- A. As required by the manufacturer for a warrantable installation of the installed products to meet the Performance and Design Criteria.

1.6 WARRANTY
- A. Interior Doors: Provide manufacturer's warranty for the life of the installation.

PART 2 PRODUCTS

2.1 DESCRIPTION
- A. Wood doors for fire-rated opening.

2.2 PERFORMANCE AND DESIGN CRITERIA
- A. Accessibility Requirements: For doors required to be accessible, comply with applicable provisions in the Accessible and Usable Building Facilities ICC A117.1 and 2010 ADA Standards for Accessible Design – Department of Justice.
- B. Fire-Rated Wood Doors: Doors complying with NFPA 80 that are listed and labeled by a qualified testing agency, for fire-protection ratings indicated, based on testing at as close to neutral pressure as possible according to NFPA 252.
- C. Factory machine doors for hardware other than surface-mounted hardware, in accordance with hardware requirements and dimensions.
- D. Factory fit doors for frame opening dimensions identified on shop drawings, with edge clearances in accordance with specified quality standard.
- E. Source Limitations: For doors and frames, obtain products from single source from single manufacturer.

2.3 MANUFACTURERS
- A. Specification is based on doors and frames by one of the following:
  1. Marshfield Door Systems
  2. Lynden Doors: www.lyndendoor.com
- B. Substitutions for products by manufacturers other than those listed above: See Section 016000 - Product Requirements.

2.4 VENEERED FACED DOORS
- A. Interior Solid-Core Doors:
  1. Grade: Premium, with Grade A faces.
  2. Species: Cherry plain sliced
  3. Stain: Cane 46-97, to match existing.
     - a. Apply medium density overlay to standard thickness, closed grain, hardwood face veneers.
     - b. Hardwood faces: AHA A135.4, Class 1 (tempered) or Class 2 (standard)
     - c. MDF Faces: ANSI A208.2, Grade 150 or 160.
  4. Exposed vertical and top edges: Any closed-grain hardwood.
  5. Core: Glued wood slave or particle wood.
  6. Construction: Five or seven piles. Sides and rails are bonded to core, then entire unit abrasive planed before veneering. Faces are bonded to core using a hot press.
  7. Construction: Seven piles, either bonded or nonbonded construction.
  8. WDMA I.S 1-S Performance Grade: Standard Duty.

2.5 MATERIALS
- A. Door Construction, General
  1. Fire-Protection Rated Doors: Provide core specified as needed to provide fire-protection rating indicated.
     - a. Edge Construction: Provide edge construction with intumescent seals concealed by outer stile. Comply with specified requirements for exposed edges.
     - b. Pairs: Provide fire-retardant stiles that are listed and labeled for applications indicated without formed-steel edges and astragals. Provide stiles with concealed intumescent seals. Comply with specified requirements for exposed edges.
- B. Fire-rated wood doors: Per Door Schedule on drawings.
  1. Performance Criteria:
     - a. Fire Rating: As indicated on Door and Frame Schedule, tested in accordance with UL 10C ("positive pressure").
       - 1) Provide units listed and labeled by UL.
       - 2) Attach fire rating label to each fire rated unit.
     - b. Fire Rated Doors: Tested to ratings indicated on drawings in accordance with International Building Code ("positive pressure"); UL or WH (ITS) labeled without any visible seals when door is open.
  2. Features:
     - a. Thickness: 1-3/4 inches.
     - b. Core: Fire rated as required to meet performance criteria.
     - c. Facing Material: Painted.
       - 1) High pressure decorative laminate finish.
     - d. Color/Finish: To be selected by Architect from manufacturer's full range.

2.6 ACCESSORIES
- A. All accessory materials required by the manufacturer for a warrantable installation of the installed products in a manner that meets the Performance and Design Criteria.

2.7 FINISHING

A. Factory Finish: Finish doors at factory that are indicated to receive transparent finish. Field finish doors indicated to receive opaque finish.

PART 3 EXECUTION

3.1 EXAMINATION

A. Verify existing conditions meet the manufacturer's requirements before starting work.

3.2 INSTALLATION

A. General: Install all materials in accordance with manufacturer's instructions based on conditions present.

B. Field-Finished Doors: Trimming to fit is acceptable.

1. Adjust width of non-rated doors by cutting equally on both jamb edges.
2. Trim maximum of 3/4 inch off bottom edges.

C. Coordinate installation of hardware.

D. Touch up damaged finishes.

3.3 TOLERANCES

A. Conform to specified quality standard for fit and clearance tolerances.

B. Conform to specified quality standard for telegraphing, warp, and squareness.

3.4 ADJUSTING

A. Adjust and lubricate hardware for proper operation.

B. Adjust for smooth and balanced door movement in accordance with manufacturer's instructions.

3.5 PROTECTION

A. Protect installed work as required by the manufacturer to maintain product performance, design criteria, and warranty.

3.6 SCHEDULE

A. Refer to door schedule on drawings.

END OF SECTION

SECTION 085313 - VINYL WINDOWS

PART 1 GENERAL

1.1 SECTION INCLUDES
- A. Vinyl-framed, factory-glazed windows.
- B. Operating hardware.
- C. Insect screens.

1.2 RELATED REQUIREMENTS
- A. Section 072500 - Weather Barriers: Sealing frames to water-resistive barrier installed on adjacent construction.
- B. Section 079005 - Joint Sealers: Sealing joints between frames and adjacent construction.

1.3 REFERENCE STANDARDS
- A. AAMA/WDMA/CSA 101/I.S.2/A440 - North American Fenestration Standard/Specification for Windows, Doors, and Skylights 2022.
- B. AAMA 502 - Voluntary Specification for Field Testing of Newly Installed Fenestration Products 2021.
- C. AAMA 1503 - Voluntary Test Method for Thermal Transmittance and Condensation Resistance of Windows, Doors and Glazed Wall Sections 2009.
- D. ASTM E783 - Standard Test Method for Field Measurement of Air Leakage Through Installed Exterior Windows and Doors 2002 (Reapproved 2018).
- E. ASTM E1105 - Standard Test Method for Field Determination of Water Penetration of Installed Exterior Windows, Skylights, Doors, and Curtain Walls, by Uniform or Cyclic Static Air Pressure Difference 2015 (Reapproved 2023).

1.4 ADMINISTRATIVE REQUIREMENTS
- A. Preinstallation Meeting: Convene one week before starting work of this section.

1.5 SUBMITTALS
- A. See Section 013100 - Project Management and Coordination for submittal procedures.
- B. Shop Drawings: Indicate opening dimensions, framed opening tolerances, affected related work, and installation requirements.
- C. Manufacturer's Certificate: Certify that products of this section meet or exceed specified requirements.
- D. Grade Substantiation: Prior to submitting shop drawings or starting fabrication, submit one of the following showing compliance with specified grade:
  1. Evidence of AAMA Certification.
  2. Evidence of WDMA Certification.
  3. Evidence of CSA Certification.
  4. Test report(s) by independent testing agency itemizing compliance and acceptable to authorities having jurisdiction.
- E. Test Reports: Prior to submitting shop drawings or starting fabrication, submit test report(s) by independent testing agency showing compliance with performance requirements in excess of those prescribed by specified grade.
- F. Field Quality Control Submittals: Report of field testing for water penetration and air leakage.

1.6 QUALITY ASSURANCE
- A. Manufacturer Qualifications: Company specializing in manufacturing products specified in this section, with not less than three years of documented experience.
- B. Installer Qualifications: Company specializing in performing of type specified and with at least three years documented experience.

1.7 DELIVERY, STORAGE, AND HANDLING
- A. Protect finished surfaces with wrapping. Do not use adhesive papers or sprayed coatings that bond when exposed to sunlight or weather.

B. Jig, brace, and box the window frame assemblies for transport to minimize flexing of members or joints.

1.8 WARRANTY

A. Correct defective work within a 5-year period after Date of Substantial Completion.

B. Manufacturer's Warranty: Provide five-year manufacturer warranty for insulated glass units from seal failure, interpane dusting or misting, and replacement of same. Include coverage for degradation of vinyl color finish. Complete form in Owner's name and register with manufacturer.

PART 2 PRODUCTS

2.1 DESCRIPTION

A. Vinyl Windows: Factory fabricated frame and sash members of extruded, hollow, ultra-violet-resistant, polyvinyl chloride (PVC) with integral color; with factory-installed glazing, hardware, related flashings, anchorage and attachment devices.

1. Basis of Design: JELD-WIN, Inc. to match existing style and finish.
   a. Other manufacturers: Milgard- Windows CertainTeed Corporation
2. Configuration: As indicated on drawings.
   a. Product Type: C - Casement window and FW - Fixed window in accordance with AAMA/WDMA/CSA 101/I.S.2/A440.
3. Color: Select from manufacturer's standard colors, match existing window frame color.
   a. Fire Station 53: White to match existing.
   b. Fire Station 57: White to match existing.
4. Size to fit openings with minimum clearance around perimeter of assembly providing necessary space for perimeter seals.
5. Framing Members: Fusion welded corners and joints, with internal reinforcement where required for structural rigidity; concealed fasteners.
6. System Internal Drainage: Drain to exterior side by means of weep drainage network any water entering joints, condensation within glazing channel, or other migrating moisture within system.
7. Glazing Stops, Trim, Flashings, and Accessory Pieces: Formed of rigid PVC, fitting tightly into frame assembly.

2.2 PERFORMANCE REQUIREMENTS

A. Grade: AAMA/WDMA/CSA 101/I.S.2/A440 as follows:
   1. Minimum Performance Class (PC): CW.

B. Design Pressure: In accordance with applicable codes.

C. Condensation Resistance Factor: CRF of 50, minimum, the lower value of the glass and frame window components and determined in accordance with AAMA 1503.

D. Thermal Transmittance (U-value): NFRC 100 maximum whole-window U-factor: see drawings

E. Solar Heat-Gain Coefficient (SHGC): NFRC 200 maximum whole-window SHGC: Whole-window SHGC to comply with per WSEC TABLE C402.4 based on window orientation.

2.3 MANUFACTURERS

A. JELD-WEN, Inc.

B. Milgard Windows, Inc.

2.4 COMPONENTS

A. Glazing: Insulated double pane, annealed glass, clear, low-E coated, argon filled, with glass thicknesses as recommended by manufacturer for specified wind conditions and acoustic rating indicated.

B. Frame Depth: Match existing.

PART 3 EXECUTION

3.1 INSTALLATION

A. Install window unit assemblies in accordance with manufacturer's instructions and applicable building codes.

B. Attach window frame and shims to perimeter opening to accommodate construction tolerances and other irregularities as necessary.

C. Align window plumb and level, free of warp or twist, and maintain dimensional tolerances and alignment with adjacent work.

3.2 TOLERANCES

A. Maximum Variation from Level or Plumb: 0.06 inches every 3 ft (1.5 mm/m) non-cumulative or 0.5 inches per 100 ft (12 mm/30 m), whichever is less.

3.3 FIELD QUALITY CONTROL

A. See Section 014000 - Quality Requirements for independent field testing and inspection requirements, and requirements for monitoring quality of specified product installations.

B. Provide field testing of installed vinyl windows by independent laboratory in accordance with AAMA 502 and AAMA/WDMA/CSA 101/I.S.2/A440 during construction process and before installation of interior finishes.

1. Field test for water penetration in accordance with ASTM E1105 using Procedure B - cyclic static air pressure difference; test pressure shall not be less than 1.9 psf (91 Pa).
2. Field test for air leakage in accordance with ASTM E783 with uniform static air pressure difference of 6.27 psf (300 Pa).

C. Repair or replace fenestration components that have failed designated field testing, and retest to verify performance complies with specified requirements.

3.4 CLEANING

A. Remove protective material from pre-finished surfaces.

B. Wash surfaces by method recommended and acceptable to window manufacturer; rinse and wipe surfaces clean.

C. Remove excess glazing sealant by moderate use of mineral spirits or other solvent acceptable to sealant manufacturer and appropriate for application indicated.

END OF SECTION

SECTION 087100 – DOOR HARDWARE

PART 1 - GENERAL

1.1 SUMMARY

A. This section includes the following:
   1. Door hardware
   2. Hardware for Aluminum doors

B. Related Sections:
   1. Section 081113 - Hollow Metal Doors and Frames
   2. Section 081416 - Flush Wood Doors and Frames
   3. Section 084115 - Access Doors and Panels

1.2 QUALITY ASSURANCE

A. Product Qualification:
   1. To assure a uniform high quality of materials for the project, it is intended that only specified items be furnished. Comparable products may be accepted upon prior approval of architect.
   2. Hardware to be new, free of defects, blemishes and excessive play. Obtain each kind of hardware (latch and locksets, exit devices, hinges and closers) from one manufacturer except where specified.
   3. Fire-Rated opening in compliance with NFPA80. Hardware UL10C/UBC-7-2 (positive pressure) compliant for given type/size opening and degree of label. Provide proper latching hardware, non-flaming door closers, approved bearing hinges and smoke seal. Furnish openings complete.

B. Supplier Qualifications
   1. Hardware supplier will be a direct factory contract supplier who employs a certified architectural hardware consultant (AHC) available at all reasonable time during the course of the work for project hardware consultation to owner, architect and contractor.
   2. Supplier will be responsible for detailing, scheduling and ordering of finish hardware.
   3. Conduct pre-installation conference at jobsite. Initiate and conduct with supplier, installer and related trades. Coordinate materials and techniques and sequence complex hardware items and systems installation.
   4. Key Conference shall be initiated and conducted with owner to determine system, keyway(s) and structure.

C. Installer Qualifications:
   1. Installer to have not less than 3-year experience specializing in installation of work in this section. Company must maintain qualified personnel trained and experienced in installing hardware.

1.3 REFERENCES

A. NFPA80 – Fire Doors and Windows

B. NFPA101 – Life Safety Code

C. NFPA105 – Smoke and Draft Control Door Assemblies

D. ANSI A117.1 Specifications for making Buildings usable by physically handicapped people.

1.4 SUBMITTALS

A. Hardware schedule: Submit 6 copies of schedule. Organize vertically formatted schedule into Hardware Sets with index of doors and headings, indication complete designations of every item required for each door or opening. Include the following:
   1. Type, style, function, size, quantity and finish of hardware items.
   2. Name, part number and manufacture of each item.
   3. Fastenings and other pertinent information.
   4. Explanation of abbreviations, symbols and codes contained in schedule.
   5. Door and frame sizes, materials and degrees of swing.

B. Product Data: Submit 4 copies for each product indicated.

C. Templates: Obtain and distribute templates for doors, frames, and other works specified, to be prepared for installing door hardware.

D. Wiring/Riser diagrams: as required for electric hardware indicated.

E. Maintenance Data: For each type of door hardware to include in maintenance manuals specified in Division 1.

F. Keying Schedule: Prepared by or under the supervision of supplier, after receipt of the approved finish hardware schedule, detailing Owner's final keying instructions for locks.

G. Samples: Upon request submit material samples.

1.5 DELIVERY, STORAGE AND HANDLING

A. Deliver, store, handle and protect products to project site under provisions of Division 1 and as specified herein.

B. Tag each item or package separately, with identification related to the final Door Hardware Schedule, and include basic installation instructions with each item or package.

C. Deliver keys to Owner by registered mail.

1.6 WARRANTY:

A. The finish hardware shall have a limited warranty against defects in workmanship and operation for a period of one year from date of substantial completions and the following items are as shown:
   1. Closers — Ten years mechanical, two years electrical.
   2. Exit Devices: — Three years mechanical, one year electrical

3. Hinges — Life of the building.
4. Locksets — Seven years

PART 2 - PRODUCTS

2.1 MATERIAL AND FABRICATION

A. Provide all door hardware for complete work, in accordance with the drawings and as specified herein.

B. Provide items and quantities not specifically mentioned to ensure a proper and complete operational installation.

2.2 MANUFACTURERS:

A. Any item shown in the hardware schedule, but not listed below shall be supplied as shown unless otherwise approved by the Architect.

ITEM:	MANUFACTURER:	ACCEPTABLE SUB:
Hinges	(IVE) Ives	Mckinney, Bommer
Locks	(SCH) Schlage	None
Cylinders	(BES) Best	None
Exit Devices	(VON) Von Duprin	None
Electric Strikes	(VON) Von Duprin	HES
Closers	(LCN) LCN	None
Silencers	(IVE) Ives	Hager, Rockwood
Push & Pull Plates	(IVE) Ives	Hager, Rockwood
Kickplates	(IVE) Ives	Hager, Rockwood
Stops & Holders	(IVE) Ives	Hager, Rockwood
Overhead Stops	(GLY) Glynn-Johnson	None
Thresholds	(NGP) National Guard	Pemko, Zero
Seals & Bottoms	(NGP) National Guard	Pemko, Zero
Automatic Opener	(LCN) LCN	None
Prox Reader/Controllers	(SCE) Schlage Electonics	None
Pocket Set	(JOH) Johnson	Stanley

2.3 HANGING

A. Conventional Hinges: Hinge open width minimum, but of sufficient throw to permit maximum door swing. Steel or stainless steel pins.
   1. Three hinges per leaf to 7 foot, 6 inch height. Add one for each additional 30 inches in height or any fraction thereof.
   2. Provide 4 ½ x 4 ½ for 1 ¾” thick doors up to 36”. Provide 5 x 4 ½ on doors over 36”.
   3. Out swinging exterior doors to have non removable (NRP) pins.
   4. Pin tips, flat button, finish to match leaves

2.4 LOCKSETS, LATCHSETS, DEADBOLTS

A. Extra Heavy Duty Cylindrical Locks and Latches: as scheduled.
   1. ANSI A156.2 Series 4000, Grade 1 Strength and Operational requirements.
      a. UL listed for A label and lesser class single doors up to 4ft x 8ft.
   2. Meets A117.1 Accessibility Codes.
   3. Latch bolts shall be steel with minimum ½" throw, deadlocking on keyed and exterior functions. ¾" throw anti-friction latch bolt on pairs of fire doors.
   4. Lock case steel.
   5. Lock shall incorporate one piece spring cage and spindle.
   6. Locksets to be tested to exceed 3,000,000 cycles.
   7. Strikes: 16 gage curved steel, bronze or brass with 1" deep box construction, lips of sufficient length to clear trim and protect clothing.
   8. Provide seven year warranty.
   9. Lock Series and Design: Schlage ND series, "Rhodes" design.

2.5 KEYS, KEYING, AND KEY CONTROL

A. Keying shall be established at a key conference attended by the Owner/Architect and Hardware Supplier. Provide Best cylinders.

B. Provide permanent key schedule in a format acceptable to the Owner. All permanent keys shall be hand delivered or sent via registered mail directly to the Owner.

C. Provide Construction cylinders for exterior doors.
   Provide:
   3 keys per cylinders
   3 control keys
   12 Master keys
   6 Construction keys
   1 Key Cabinet RWC25S

2.6 EXIT DEVICES/PANIC HARDWARE

A. General features:
   1. Independent lab-tested 1,000,000 cycles.
   2. Push-through touch pad design. No exposed touch bar fasteners, no exposed cavities when operated. Return stroke fluid dampeners and rubber bottoming dampeners, plus anti-rattle devices.
   3. ¾" throw deadlocking latchbolts.
   4. No exposed screws to show through glass doors.
   5. Non-handed basic device design with center case interchangeable with all functions, no extra parts required to effect change of function.
   6. Releasable with 32 lb. maximum pressure under 250 lb. load to the door.

B. Specific features:
   1. Lever Trim: Breakaway type, forged brass or bronze escutcheon min .130" thickness, match lockset lever design.
   2. Fire-Labeled Devices: UL label indicating "Fire Exit Hardware".

2.7 CLOSERS

1. Full rack-and-pinion type cylinder with removable non-ferrous cover and cast iron body. Double heat-treated pinion shaft, single piece forged piston, chrome-silicon steel spring.
2. ISO 2000 certified. Units stamped with date-of-manufacture code.
3. Independent lab-tested 5,000,000 cycles.
4. Thru-bolts at wood doors unless doors are provided with closer blocking. Non-sized, non-handed and adjustable. Place closers inside building, stairs and rooms.
5. Plates, brackets and special templating when needed for interface with particular header, door and wall conditions and neighboring hardware.
6. Opening pressure: Exterior doors 8.5 lb., interior doors 5 lb., labeled fire doors 15 lb.
7. Separate adjusting valves for closing speed, latching speed and backcheck, fourth valve for delayed action where scheduled.
8. Exterior door closers: tested to 100 hours of ASTM B117 salt spray test, furnish data on request.
9. Exterior doors do not require seasonal adjustments in temperatures from 120 degrees F to 0 degrees F, furnish data on request.
10. Non-flaming fluid will not fuel door or floor covering fires.

2.8 OTHER HARDWARE

A. Door stops: Provide stops to protect walls, casework or other hardware.
   1. Except as otherwise indicated, provide stops (wall, floor or overhead) at each leaf of every swinging door leaf.
   2. Where wall or floor stops are not appropriate, provide overhead holders.

B. Gaskets and Sweeps
   1. Provide continuous weather-strip gasketing on exterior doors and provide smoke, light, or sound gasketing on interior doors where indicated or scheduled.
   2. Provide non-corrosive fasteners as recommended by the manufacturer for application indicated.

C. Thresholds
   1. Except as otherwise indicated, provide standard metal threshold unit of type, size and profile as detailed or scheduled.

D. Silencers
   1. Interior hollow metal frames, 3 for single doors, 4 for pairs of doors.

2.9 HARDWARE FINISH

A. Provide the following finishes unless noted differently in hardware groups.

Locks, Latches 626
Push, pulls - 630
Hinges, Exterior 630 Interior 626
Closers Alum
Exit Devices 626
Other hardware 626
Thresholds Alum
Weatherstrip/sweeps Alum

PART 3 - EXECUTION

3.1 ACCEPTABLE INSTALLERS:

A. Factory trained, certified, and carries a factory-issued card certifying that person as a “Certified Installer”. Alternative: can demonstrate suitably equivalent competence and experience.

3.2 PREPARATION:

A. Ensure that walls and frames are square and plumb before hardware installation.

B. Locate hardware per SDI-100 and applicable building, fire, life-safety, accessibility, and security codes. Notify Architect of any code conflicts before ordering materials.

3.3 INSTALLATION

A. Install hardware per manufacturer’s instructions and recommendations. Do not install surface mounted items until finishes have been completed on substrate. Set units level, plumb and true to line and location. Adjust and reinforce attachment substrate for proper installation and operation. Locate floor stops not more than 4 inches from the wall. Drill pilot holes for fasteners in wood doors and/or frames.

3.4 ADJUSTING

A. Adjust and check for proper operation and function. Replace units which cannot be adjusted to operate freely and smoothly.

B. Hardware damaged by improper installation or adjustment methods to be repaired or replaced to Owner’s satisfaction.

3.5 FOLLOW UP INSPECTION

A. Installer to provide letter of agreement to Owner that approximately 6 months after substantial completion, installer will visit project with representative of the manufacturers of the locking devices and door closers to accomplish the following:
   1. Re-adjust locks and closers
   2. Evaluate maintenance procedures and recommend changes or additions, and instruct Owner’s personnel.
   3. Identify items that have deteriorated or failed.
   4. Submit written report identifying problems and likely future problems.

3.6 DEMONSTRATION

A. Demonstrate electrical, electronic and pneumatic hardware systems, including adjustment and maintenance procedures.

3.7 PROTECTION/CLEANING

A. Cover installed hardware, protect from paint, cleaning agents, weathering, carts/barrows, etc. Remove covering materials and clean hardware just prior to substantial completion.

B. Clean adjacent wall, frame and door surfaces soiled from installation/reinstallation process.

3.8 DOOR HARDWARE SCHEDULE

Hardware Group No. 01

Provide each SGL door(s) with the following:

QTY		DESCRIPTION	CATALOG NUMBER		FINISH	MFR
3	EA	HINGE	5BB1HW 4.5 X 4.5		630	IVE
1	EA	STOREROOM LOCK	ND80BDC RHO		626	SCH
1	EA	ELECTRIC STRIKE	6210 FSE 12/16/24/28 VAC/VDC	✓	630	VON
1	EA	SURFACE CLOSER	4040XP REG OR PA AS REQ		690	LCN
1	EA	KICK PLATE	8400 10" X 2" LDW B-CS		630	IVE
1	EA	FLOOR STOP	FS444		626	IVE
1	EA	GASKETING	488FSBK PSA		BK	ZER
1	EA	DOOR SWEEP	39A		A	ZER
1	EA	THRESHOLD	545A-223		A	ZER
3	EA	SILENCER	SR64		GRY	IVE
			CARD READER - WORK OF DIVISION 28	✓		
			POWER SUPPLY - WORK OF DIVISION 28			

Hardware Group No. 02

For use on Door #(s):
136

Provide each SGL door(s) with the following:

QTY		DESCRIPTION	CATALOG NUMBER		FINISH	MFR
3	EA	HINGE	5BB1HW 4.5 X 4.5		630	IVE
1	EA	PASSAGE SET	ND10S RHO		626	SCH
1	EA	SURFACE CLOSER	4040XP		690	LCN
1	EA	KICK PLATE	8400 10" X 2" LDW B-CS		630	IVE
1	EA	WALL STOP	WS406/407CCV		630	IVE
1	EA	GASKETING	488FSBK PSA		BK	ZER
1	EA	THRESHOLD	102A-223		A	ZER

Hardware Group No. 03

Provide each SGL door(s) with the following:

QTY		DESCRIPTION	CATALOG NUMBER			FINISH	MFR
3	EA	HINGE	5BB1HW 4.5 X 4.5			630	IVE
1	EA	STOREROOM LOCK	ND80BDC RHO			626	SCH
1	EA	ELECTRIC STRIKE	6210 FSE 12/16/24/28 VAC/VDC		✓	630	VON
1	EA	SURFACE CLOSER	4040XP REG OR PA AS REQ			690	LCN
1	EA	KICK PLATE	8400 10" X 2" LDW B-CS			630	IVE
1	EA	WALL STOP	WS406/407CCV			630	IVE
1	EA	GASKETING	488FSBK PSA			BK	ZER
1	EA	DOOR SWEEP	39A			A	ZER
1	EA	THRESHOLD	545A-223			A	ZER
3	EA	SILENCER	SR64			GRY	IVE
			CARD READER - WORK OF DIVISION 28		✓		
			POWER SUPPLY - WORK OF DIVISION 28				

Hardware Group No. 04

Provide each SGL door(s) with the following:

QTY		DESCRIPTION	CATALOG NUMBER		FINISH	MFR
3	EA	HINGE	5BB1HW 4.5 X 4.5		630	IVE
1	EA	STOREROOM LOCK	ND80BDC RHO		626	SCH
1	EA	OH STOP	100S		630	GLY
1	EA	SURFACE CLOSER	4040XP EDA		690	LCN
1	EA	KICK PLATE	8400 10" X 2" LDW B-CS		630	IVE
1	EA	GASKETING	50AA-S		AA	ZER
1	EA	DOOR SWEEP	39A		A	ZER
1	EA	THRESHOLD	655A-223		A	ZER

Hardware Group No. 05

Provide each SGL door(s) with the following:

QTY		DESCRIPTION	CATALOG NUMBER		FINISH	MFR
3	EA	HINGE	5BB1 4.5 X 4.5		652	IVE
1	EA	STOREROOM LOCK	ND80BDC RHO		626	SCH
1	EA	OH STOP	100S		630	GLY
1	EA	SURFACE CLOSER	4040XP EDA		690	LCN
1	EA	KICK PLATE	8400 10" X 2" LDW B-CS		630	IVE
3	EA	SILENCER	SR64		GRY	IVE

END OF SECTION 087100

SECTION 088300 - MIRRORS

PART 1 GENERAL

1.1 SECTION INCLUDES
- A. Glass mirrors.

1.2 SUBMITTALS
- A. Product Data on Mirror Types: Provide structural, physical and environmental characteristics, size limitations, special handling or installation requirements.
- B. Product Data on Glazing Compounds: Provide chemical, functional, and environmental characteristics, limitations, special application requirements. Identify available colors.
- C. Manufacturer's Certificate: Certify that mirrors, meets or exceeds specified requirements.
- D. Warranty: Submit manufacturer warranty and ensure that forms have been completed in Owner's name and registered with manufacturer.
- E. Maintenance Materials: Furnish the following for Owner's use in maintenance of project.
  1. Extra Mirror Glazing: One of each type and size.

1.3 QUALITY ASSURANCE
- A. Perform Work in accordance with GANA (GM) Glazing Manual for glazing installation methods.
- B. Fabricate, store, transport, receive, install, and clean mirrors in accordance with recommendations of GANA (TIPS), "Mirrors Handle with Extreme Care: Tips for the Professional on the Care and Handling of Mirrors."

1.4 FIELD CONDITIONS
- A. Do not install mirrors when ambient temperature is less than 50 degrees F.
- B. Maintain minimum ambient temperature before, during and 24 hours after installation of glazing compounds.

1.5 WARRANTY
- A. Provide five year manufacturer warranty for reflective coating on mirrors and replacement of same.

PART 2 PRODUCTS

2.1 DESCRIPTION
- A. Frameless glass mirrors wall mounted with clips and adhesive.

2.2 MANUFACTURERS
- A. Mirrors:
  1. Trulite Glass and Aluminum Solutions: www.trulite.com.
  2. Binswanger Mirror/ACI Distribution: www.binswangerglass.com.
  3. Lenoir Mirror Co: www.lenoirmirror.com.
  4. Substitutions: See Section 016000 - Product Requirements.

2.3 MATERIALS
- A. Mirror Glass; General:
  1. Select materials and/or provide supports as required to limit mirrored glass deflection to 1/200 or flexure limit of glass with full recovery of glazing materials, whichever is less.
- B. Mirror Glass:
  1. ASTM C1036, Type 1 transparent flat, Class 1 clear, Quality Q1 (mirror select); silvering, protective coating and physical characteristics complying with ASTM C1503; 6 mm minimum thick.

2.4 GLAZING ACCESSORIES
- A. Setting Blocks:
  1. Neoprene, 80 to 90 Shore A durometer hardness.
- B. Spacer Shims:
  1. Neoprene, 50 to 60 Shore A durometer hardness.
- C. Glazing Tape:

1. Preformed butyl compound; 10 to 15 Shore A durometer hardness; on release paper.

D. Glazing Clips:
1. Manufacturer's standard type.

E. Mirror Attachment Accessories:
1. Stainless steel J-profile channels at bottom only.

F. Mirror Adhesive:
1. Chemically compatible with mirror coating and wall substrate.

G. Rolled Formed Frame:

H. Channel Frame:

PART 3 EXECUTION

3.1 EXAMINATION

A. Verify that openings for mirrored glazing are correctly sized and within tolerance.

B. Verify that surfaces of glazing channels or recesses are clean, free of obstructions, and ready to receive mirrors.

3.2 PREPARATION

A. Clean contact surfaces with solvent and wipe dry.

B. Seal porous glazing channels or recesses with substrate compatible primer or sealer. Prime surfaces scheduled to receive sealant.

C. Perform installation in accordance with ASTM C1193 for solvent release sealants. Install sealant in accordance with manufacturer's instructions.

3.3 INSTALLATION - GENERAL

A. Install mirrors in accordance with GANA recommendations.

B. Set mirrors plumb and level, free of optical distortion.

C. Set mirrors with edge clearance free of surrounding construction including countertops or backsplashes.

D. Frameless Mirrors: Set mirrors with J-channel and adhesive, applied in accordance with adhesive manufacturer's instructions.
1. Using a full bed of adhesive mount mirror to preservative pressure treated plywood backing.
2. Support mirror until adhesive has set.

3.4 CLEANING

A. Remove wet glazing materials from finish surfaces.

B. Remove labels after work is complete.

C. Clean mirrors and adjacent surfaces.

3.5 PROTECTION

A. After installation, mark pane with an 'X' by using removable plastic tape or paste.

END OF SECTION

SECTION 092116 - GYPSUM BOARD ASSEMBLIES

PART 1 GENERAL

1.1 SECTION INCLUDES
- A. Gypsum Sheathing.
- B. Gypsum Board.
- C. Acoustical Wall Accessories.

1.2 RELATED REQUIREMENTS
- A. 061000 - Rough Carpentry: Building framing and sheathing.
- B. 078400 - Firestopping: Top-of-wall assemblies at fire rated walls.
- C. 079005 - Joint Sealers: Acoustic sealant.

1.3 SUBMITTALS
- A. Product Data: Provide data on gypsum board, glass mat faced gypsum board, accessories, joint finishing system, and cement board.
- B. Shop Drawings: Indicate special details associated with fireproofing and acoustic seals.
- C. Test Reports: For all stud framing products that do not comply with ASTM C645 or ASTM C754, provide independent laboratory reports showing maximum stud heights at required spacings and deflections.

1.4 QUALITY ASSURANCE
- A. Installer Qualifications: Company specializing in performing the work of this section with minimum 5 years of experience on projects of similar size and complexity.

1.5 DELIVERY, STORAGE, AND HANDLING
- A. As required by the manufacturer for a warrantable installation of the installed products to meet the Performance and Design Criteria.

PART 2 PRODUCTS

2.1 DESCRIPTION
- A. Includes Gypsum wallboard finishing, metal trim and accessories, and acoustical sealants and insulation.

2.2 PERFORMANCE AND DESIGN CRITERIA
- A. Provide completed gypsum board assemblies complying with ASTM C840 and GA-216.
- B. Fire Rated Assemblies: Provide completed assemblies complying with UL listed assemblies indicated and ratings indicated on life safety drawings.
  - 1. Gypsum Association File Numbers: Comply with requirements of GA-600 for the particular assembly.
  - 2. UL Assembly Numbers: Provide construction equivalent to that listed for the particular assembly in the current UL Fire Resistance Directory.
- C. Interior Partitions Indicated as Acoustic: Provide completed assemblies with the following characteristics:
  - 1. Acoustic Attenuation: STC of 45-49 calculated in accordance with ASTM E413, based on tests conducted in accordance with ASTM E90.

2.3 MATERIALS
- A. Gypsum Board:
  - 1. Gypsum Wallboard: Paper-faced gypsum panels as defined in ASTM C1396/C1396M; sizes to minimize joints in place; ends square cut.
    - a. Application: Use for vertical surfaces, unless otherwise indicated.
    - b. Type X: Thickness 5/8 inch.
      - 1) Edges: Tapered.
      - 2) Products:
        - (a) Georgia-Pacific Gypsum; ToughRock, and ToughRock Fireguard.
        - (b) CertainTeed Gypsum, Inc.; GlasRoc.

2.4 ACCESSORIES

A. All accessory materials required by the manufacturer for a warrantable installation of the installed products in a manner that meets the Performance and Design Criteria.

B. Acoustical Wall Accessories:

1. Resilient Sound Isolation Clips (RSIC): RFM RC

a. Product: Subject to compliance with requirements, provide GenieClip RST by Pliteq, Inc., RSIC-1 by PAC International, LLC., or a comparable product.

b. Transmission Loss: No less than an additional 16 dB.

C. Acoustic Sealant:

1. As specified in Section 079005 - Joint Sealers.

D. Stepped outside corner trim: Fry reglet stepped outside corner

1. Color: gun metal gray

E. Finishing Accessories:

1. ASTM C1047, galvanized steel or rolled zinc, unless otherwise indicated.

a. Types: As detailed or required for finished appearance.

b. Special Shapes: In addition to conventional cornerbead and control joints, provide U-bead at exposed panel edges.

F. Joint Materials:

1. ASTM C475/C475M and as recommended by gypsum board manufacturer for project conditions.

a. Tape: 2 inch wide, coated glass fiber tape for joints and corners, except as otherwise indicated.

b. Typical: Ready-mixed vinyl-based joint compound.

c. Exterior Soffits: Chemical hardening type compound.

G. High Build Drywall Surfacer:

1. Vinyl acrylic latex-based coating for spray application, designed to take the place of skim coating and separate paint primer in achieving Level 5 finish.

H. Anchorage to Substrate:

1. Tie wire, nails, screws, and other metal supports, of type and size to suit application; to rigidly secure materials in place.

PART 3 EXECUTION

3.1 EXAMINATION

A. Verify existing conditions meet the manufacturer's requirements before starting work.

3.2 PREPARATION

A. Prepare surfaces to receive work in accordance with manufacturer's instructions.

3.3 INSTALLATION

A. General: Install all materials in accordance with manufacturer's instructions based on conditions present.

B. Comply with ASTM C840 and GA-216. Install to minimize butt end joints, especially in highly visible locations.

C. Fire-Rated Construction: Install gypsum board in strict compliance with requirements of assembly listing.

3.4 INSTALLATION OF TRIM AND ACCESSORIES

A. Control Joints: Place control joints consistent with lines of building spaces and as indicated.

1. Not more than 30 feet apart on walls and ceilings over 50 feet long.

2. At exterior soffits, not more than 30 feet apart in both directions.

B. Corner Beads: Install at external corners, using longest practical lengths.

C. Edge Trim: Install at locations where gypsum board abuts dissimilar materials and as indicated.

3.5 JOINT TREATMENT

A. Glass Mat Faced Gypsum Board and Exterior Glass Mat Faced Sheathing: Use fiberglass joint tape, bedded and finished with chemical hardening type joint compound.
B. Paper Faced Gypsum Board: Use paper joint tape, bedded with ready-mixed vinyl-based joint compound and finished with ready-mixed vinyl-based joint compound.
C. Finish gypsum board in accordance with levels defined in ASTM C840, as follows:
    1. Level 5: Walls and ceilings typical.
    2. Level 4: Perforated gypsum.
    3. Level 4: For flat paint, a light final paint texture, or with lightweight wall covering.
    4. Level 3: In utility areas, behind cabinetry, and on backing board to receive tile finish.
    5. Level 2: In utility areas, behind cabinetry, and on backing board to receive tile finish.
    6. Level 1: Fire rated wall areas above finished ceilings, whether or not accessible in the completed construction.
    7. Level 0: Temporary partitions and surfaces indicated to be finished in later stage of project.
    8. Level 0: Surfaces indicated to be finished in later stage of project.
D. Tape, fill, and sand exposed joints, edges, and corners to produce smooth surface ready to receive finishes.
    1. Feather coats of joint compound so that camber is maximum 1/32 inch.
E. Where Level 5 finish is indicated, spray apply high build drywall surfacer over entire surface after joints have been properly treated; achieve a flat and tool mark-free finish.
F. Fill and finish joints and corners of cementitious backing board as recommended by manufacturer.

3.6 FIELD OBSERVATION AT "PUNCH"

A. Finish will be judged from a viewing difference of 4 feet.
B. Ceilings will be viewed from a standing position.
C. Finished lighting system or temporary lighting similar to proposed finished lighting should be used for judging the wall.
D. Eye catching discrepancies and or blemishes, including “fuzzy” wall board surfaces, will be rejected.

3.7 PROTECTION

A. Protect installed work as required by the manufacturer to maintain product performance, design criteria and warranty.

3.8 SCHEDULE

A. Typical: Gypsum Board, Type X, 5/8 thickness.
B. Exterior: Gypsum Sheathing,
C. Locker Rooms & Restrooms: Glass Mat Gypsum board.

END OF SECTION

SECTION 093000 - TILING

PART 1 GENERAL

1.1 SECTION INCLUDES
- A. Tile.
- B. Installation materials.
- C. Installation methods.

1.2 RELATED REQUIREMENTS
- A. 079005 - Joint Sealers: For sealants installed with tiling.
- B. 092116 - Gypsum Board Assemblies: For tile backer board installation for tile substrate.

1.3 ADMINISTRATIVE REQUIREMENTS
- A. Preinstallation Meeting: Convene one week before starting work of this section in accordance with Section 013100 - Project Management and Coordination.
  1. Review preparation and installation procedures and coordinating and scheduling required with related work.

1.4 SUBMITTALS
- A. Qualification Data: For installer.
- B. Product Data: Provide manufacturers' data sheets on tile, mortar, grout, and accessories. Include instructions for using grouts and adhesives.
- C. Shop Drawings: Indicate membrane and tile layout, patterns, color arrangement, perimeter conditions, junctions with dissimilar materials, control and expansion joints, thresholds, ceramic accessories, and setting details and related dimensioning as well as plumbing (drains) mechanical and electrical fixtures and lines installed.
- D. Sample: Mount tile and apply grout on two plywood panels, minimum 18 x 18 inches in size illustrating pattern, color variations, and grout joint size variations.
- E. Manufacturer's Installation Instructions: Indicate special preparation of substrate, installation and attachment methods, and perimeter conditions requiring special attention.
- F. Warranty: Submit manufacturer warranty and ensure forms have been completed in Owner's name and registered with manufacturer.
- G. Maintenance Data: For user's operation and maintenance of system including:
  1. Include recommended cleaning methods, cleaning materials, stain removal methods, and polishes and waxes.
  2. Precautions about cleaning materials and methods that could be detrimental to components, finishes, and performance.

1.5 QUALITY ASSURANCE
- A. Installer Qualifications: Company specializing in performing the work of this section with minimum of 5 years of experience.

1.6 DELIVERY, STORAGE, AND HANDLING
- A. As required by the manufacturer for a warrantable installation of the installed products to meet the Performance and Design Criteria.

1.7 WARRANTY
- A. Installation Warranty: Contractor shall correct defective Work withing a 2 year period after Date of Substantial Completion.
- B. Manufacturer Warranty: Provide five year warranty for tile setting materials failing to resist penetration of water.
  1. Exception: Where such failures are the result of structural failures of building. Hairline cracking of concrete due to temperature change or shrinkage is not considered a structural failure.

PART 2 PRODUCTS

2.1 DESCRIPTION

A. Tile assemblies and accessories installed in accordance with Tile Council of North America guidelines on walls, floors, and in showers.

2.2 PERFORMANCE AND DESIGN CRITERIA

A. Blending: For tiles with color variations, factory blend and package tile so each package has the same range of colors and quantities of each variation. If factory blending is not available, field blend prior to beginning installation.

B. Wet Dynamic Coefficient of Friction (DCOF): Not less than 0.42 as tested in accordance with ANSI/NFSI B101.3 Wet DCOF of Common Hard-Surface Floor Materials.

2.3 TILE

A. Wall Base Tile: Match existing.

2.4 ELASTOMERIC SEALANTS

A. General: Provide manufacturer's standard chemically curing, elastomeric sealants of base polymer and characteristics indicated that comply with applicable requirements in Division 07 Section 079005 - Joint Sealers

B. Colors: Provide colors of exposed sealants to match colors of grout in tile adjoining sealed joints, unless otherwise indicated.

C. One-Part, Mildew-Resistant Silicone Sealant: ASTM C920; Type S; Grade NS; Class 25; Uses NT, G, A and, as applicable to nonporous substrates that are subject to in-service exposures of high humidity and extreme temperatures.

1. Products:

a. Dow Corning Corporation; Dow Corning 786.

b. GE Silicones; Sanitary 1700.

c. Peccora Corporation; Pecora 898 Sanitary Silicone Sealant.

d. Tremco, Inc.; Tremsil 600 White.

D. Multipart, Pourable Urethane Sealant for Use T: ASTM C920; Type M; Grade P; Class 25; Uses T, M, A, and, as applicable to joint substrates indicated, O.

1. Products:

a. Bostik; Chem-Calk 550.

b. Mameco International, Inc.; Vulkem 245.

c. Peccora Corporation; NR-200 Urexpan.

d. Tremco, Inc.; THC-900.

2.5 INSTALLATION MATERIALS

A. Non-Ceramic Trim:

1. Basis of Design: Schluter-Systems: www.schluter.com.

a. Substitutions for products by manufacturers other than those listed: See Section 016000 - Product Requirements.

2. Satin natural anodized extruded aluminum, or stainless steel as scheduled, style and dimensions to suit application, for setting using tile mortar or adhesive.

a. Profile: As indicated on Drawings.

b. Finish: Brushed chrome; anodized.

c. Applications: Use in the following locations:

1) Open edges of wall tile.

B. Bond Coat:

1. Manufacturers:

a. Schluter All-Set; www.schluter.com.

2. Improved Latex-Portland Cement Mortar Bond Coat: ANSI A118.15.

a. Applications: Use this type of bond coat where indicated and where no other type of bond coat is indicated.

b. Products:
1) Schluter All-Set; www.schluter.com.
c. Performance:
1) Dry-Set Cement Mortar for Large and Heavy Tile.
2) Non-Sag Characteristics for Wall Tile Installations.

C. Epoxy Adhesive
1. Multi-component, factory prepared, 100 percent solid epoxy resin and hardener with sand or mineral filler material to be used as setting adhesive and joint filling grout for ceramic tile. Comply with ANSI A118.3 for thin-set applications for chemical resistant, water cleanable quarry tile installations.
2. Acceptable Products:
a. 100% Solids Epoxy Mortar Custom Building Products.
b. Latapoxy 300 Epoxy Adhesive by Laticrete.
c. Kerapoxy 410 Chemical Resistant Epoxy Mortar by Mapei.

D. Epoxy Grout:
1. Multi-Component, factory prepared, 100 percent epoxy resin and hardener with sand or mineral filler material.
2. Color: To be selected by Architect from manufacturer's full range of colors.
3. Acceptable Products:
a. 100% Solids Epoxy Grout by Custom Building Products.
b. Latapoxy SP-100 Stainless Epoxy Grout by Laticrete.
c. Latapoxy SP-100 Vertical Grade Epoxy Grout by Laticrete.
d. Kerapoxy Chemical Resistant Grout by Mapei.

E. Grout Sealer:
1. Manufacturer's standard silicone product for sealing grout joints that does not change color or appearance of grout.

2.6 INSTALLATION METHODS
A. Wall Installation over Gypsum: In accordance with The Tile Council of North America Handbook TCNA (HB):
1. TCNA Installation Method: W244.
2. Using waterproof membrane at toilet room walls containing plumbing.

2.7 ACCESSORIES
A. All accessory materials required by the manufacturer for a warrantable installation of the installed products in a manner that meets the Performance and Design Criteria.
B. Uncoupling Membrane:
1. Manufacturer: Schluter Ditra Uncoupling Membrane.
2. Application: Tile over concrete.

PART 3 EXECUTION

3.1 EXAMINATION
A. Verify existing conditions meet the manufacturer's requirements before starting work.
B. Verify Deflection of floor using note "Maximum Allowable Deflection..." under the headline Notes / Definitions in the TCA manual. This limit 1/360 with a 300 lb concentrated load shall be doubled to 1/720 for stone tiles.
C. Verify that subfloor surfaces are smooth and flat within the tolerances specified for that type of work and are ready to receive tile.
D. Large format tiles require very flat floors. Do not install if floors are not the equivalent of a floor flatness of Ff 50 (35 local) and Fl 50 (35 local).
E. Verify that concrete subfloor surfaces are ready for tile installation in accordance with requirements for moisture emission rate and alkalinity; obtain instructions if test results are not within the following limits:

1. Moisture emission rate: Not greater than 3 lb per 1000 sq ft per 24 hours, tested according to ASTM F1869.
2. Alkalinity: pH range of 5 to 9, tested according to ASTM F710.

3.2 PREPARATION

A. Prepare surfaces to receive work in accordance with manufacturer's instructions.

3.3 INSTALLATION

A. General: Install all materials in accordance with manufacturer's instructions based on conditions present.

3.4 CLEANING

A. Clean tile and grout surfaces.

3.5 PROTECTION

A. Protect installed work as required by the manufacturer to maintain product performance, design criteria, and warranty.
B. Apply heavy kraft paper as a minimum to prevent surface damage during construction, and remove before final inspection.

END OF SECTION

SECTION 095100 - ACOUSTICAL CEILINGS

PART 1 GENERAL

1.1 SECTION INCLUDES
- A. Suspended metal grid ceiling system.

1.2 RELATED REQUIREMENTS
- A. 079005 - Joint Sealers: Acoustical sealant.
- B. 092116 - Gypsum Board Assemblies: Acoustical insulation.

1.3 ADMINISTRATIVE REQUIREMENTS
- A. Preinstallation Meeting: Convene one week before starting work of this section in accordance with Section 013100 - Project Management and Coordination.
  1. Review preparation and installation procedures and coordinating and scheduling required with related work.

1.4 SUBMITTALS
- A. Qualification Data: For manufacturer and installer.
- B. Shop Drawings: Indicate grid layout and related dimensioning, junctions with other ceiling finishes, mechanical and electrical items installed in the ceiling, and perimeter molding and suspension/bracing details.
- C. Product Data: Provide data on suspension system components, acoustical units, and perimeter molding/seismic connections.
- D. Samples: Submit two samples 48 x 48 inch in size illustrating material and finish of acoustical units.
- E. Manufacturer's Installation Instructions: Indicate special preparation of substrate, installation and attachment methods, and perimeter conditions requiring special attention.
- F. Warranty: Submit manufacturer warranty and ensure forms have been completed in Owner's name and registered with manufacturer.
- G. Maintenance Data: For user's operation and maintenance of system including:
  1. Methods for maintaining system's materials and finishes.
  2. Precautions about cleaning materials and methods that could be detrimental to components, finishes, and performance.

1.5 QUALITY ASSURANCE
- A. Manufacturer Qualifications: Company specializing in the manufacture of work specified in this section with minimum 5 years of experience.
- B. Installer Qualifications: Company specializing in performing the work of this section with minimum of 5 years of experience.

1.6 MOCKUP
- A. Locate where directed.

1.7 DELIVERY, STORAGE, AND HANDLING
- A. As required by the manufacturer for a warrantable installation of the installed products to meet the Performance and Design Criteria.

1.8 WARRANTY
- A. Provide 10 year manufacturer warranty on all acoustical panels for sagging and warping, grid system, rusting, and manufacturer's defects.
- B. Provide 15 year warranty for all products using additional "Humidity and Sag resistance" control systems.

PART 2 PRODUCTS

2.1 DESCRIPTION
- A. Suspended metal grid ceiling systems with seismic edge clips and manufactured edge trim at changes in plane. Fiberglass and gypsum based acoustical units.

2.2 PERFORMANCE AND DESIGN CRITERIA
- A. Seismic Requirements:
  1. Classification: Conform to ASTM C635/C635M, Heavy Duty Classification.
  2. Code Compliance: IBC, American Society of Civil Engineers ASCE 7, and CISCA (AC) Guidelines. Comply with edition dates per local Authorities Having Jurisdiction.
- B. Components: Lock together in a positive manner.
- C. Pull out tension:
  1. Cross Tee Connections: Minimum 300 pounds.
  2. Main Tee Splices: Minimum 200 pounds.
- D. Seismic Lateral Design: Conform to IBC and ASCE 7 especially requirement for independent support from structure above for light fixture and mechanical services installed into acoustical lay-in panel ceiling systems.
- E. Install to conceal plenum space above acoustical ceiling system and to allow access.
- F. Make provisions for vertical as well as horizontal suspension systems.

2.3 MANUFACTURERS
- A. Substitutions for products by manufacturers other than those listed: See Section 016000 - Product Requirements.

2.4 MATERIALS
- A. (ACT) Acoustical Units - General: ASTM E1264, Class A.
  1. Basis of Design: Armstrong Fine Fissured Second Look, or approved equal, to match existing.
  2. Performance Criteria:
     - a. Light Reflectance: 0.88 percent, determined in accordance with ASTM E1264.
     - b. NRC: 0.75 determined in accordance with ASTM E1264.
     - c. Ceiling Attenuation Class (CAC): 35, determined in accordance with ASTM E1264.
     - d. Class A: ASTM E84 surface burning characteristics. Flame Spread Index of 25 or less. Smoke Developed Index of 50 or less (UL labeled).
     - e. ASTM E1264 Classification Type IV, Form 2, Pattern E Fire Class A.
  3. Features:
     - a. Grid: 15/16-inch.
     - b. Size: 24 x 48 inches. To match existing.
     - c. Thickness: 3/4-inch.
     - d. Composition: wet-formed mineral fiber with DuraBrite acoustically transparent membrane.
     - e. Edge: Tegular Lay-In.
     - f. Surface Color: White.
     - g. Surface Pattern: Perforated, regularly spaced large holes.

2.5 METAL SUSPENSION SYSTEMS, GENERAL
- A. Metal Suspension System Standard: Provide manufacturer's standard metal suspension systems of types, structural classifications, and finishes indicated that comply with applicable requirements in ASTM C63
- B. Finishes and Colors, General: Comply with NAAMM's "Metal Finishes Manual for Architectural and Metal Products' for recommendations for applying and designating finishes. Provide manufacturer's standard factory-applied finish for type of system indicated.
- C. Attachment Devices: Size for five times the design load indicated in ASTM C635m Table 1, "Direct Hung", unless otherwise indicated. Comply with seismic design requirements.
- D. Wire Hangers, Braces and Ties: Provide wires complying with the following requirements:
  1. Zinc-coated, Carbon-Steel Wire: ASTM A641/A641M, Class 1 zinc coating, soft temper.
  2. Size: Select wire diameter so its stress at 3 times hanger design load (ASTM C635, Table 1, "Direct Hung") will be less than yield stress of wire, but provide not less than 0.106-inch

diameter wire.

E. Seismic Struts: Manufacturer's standard compression struts designed to accommodate lateral forces.

2.6 METAL SUSPENSION SYSTEM FOR ACOUSTICAL TILE CEILING

A. Available Products: Subject to compliance with requirements, products that may be incorporated into the Work include, but are not limited to, the following:
   1. Armstrong World Industries, Inc.;
   2. USG Interiors, Inc.

B. Direct-Hung, Double-Web Suspension system: Main and cross runners roll formed from and capped with cold-rolled steel sheet, prepainted, electrolytically zinc coated, or hot-dip galvanized according to ASTM A653/A653Mm G30 (Z90) coating designation.
   1. Structural Classification: Heavy-duty system.
   2. Access: Upward and end pivoted, with initial access openings of size indicated below and located throughout ceiling within each module formed by main and cross runners, with additional access available by progressively removing remaining acoustical tiles.

2.7 ACCESSORIES

A. All accessory materials required by the manufacturer for a warrantable installation of the installed products in a manner that meets the Performance and Design Criteria.

B. Support Channels and Hangers:
   1. Galvanized steel; size and type to suit application, seismic requirements, and ceiling system flatness requirement specified.

C. Perimeter Moldings at Changes in Elevation:
   1. Same material and finish as grid.
      a. At Exposed Grid: Provide L-shaped molding for mounting at same elevation as face of grid. Basis of Design: Axiom Trim and Transitions by Armstrong Commercial Ceilings.

D. Seismic Suspension Edge Clips:
   1. Manufacturer's approved, to meet code required movement without 2 inch wall angles.
      a. Basis of Design: Seismic RX BERC2 clip components by Armstrong or ACM7 seismic clips components by USG.

E. Demountable Ceiling Grid Clips:
   1. Basis of Design: C1430 variable placement hook clip by Armstrong.

F. Acoustical Sealant for Perimeter Moldings:

G. Touch-up Paint:
   1. Type and color to match acoustical and grid units.

PART 3 EXECUTION

3.1 EXAMINATION

A. Verify existing conditions meet the manufacturer's requirements before starting work.

B. Verify that layout of hangers will not interfere with other work.

3.2 PREPARATION

A. Prepare surfaces to receive work in accordance with manufacturer's instructions.

3.3 INSTALLATION

A. General: Install all materials in accordance with manufacturer's instructions based on conditions present.

B. Suspension system:
   1. Install suspension system in accordance with ASTM C636/C636M and manufacturer's instructions and as supplemented in this section.
   2. Rigidly secure system, including integral mechanical and electrical components, for maximum deflection of 1:360.

3. Lay out system to a balanced grid design with edge units no less than 50 percent of acoustical unit size.
    a. See also reflected ceiling plans. Where 50 percent unit cannot be achieved, consult Architect before installation.
4. Install after major above-ceiling work is complete. Coordinate the location of hangers with other work.
5. Provide hanger clips during steel deck erection. Provide additional hangers and inserts as required.
6. Hang suspension system independent of walls, columns, ducts, pipes and conduit. Where carrying members are spliced, avoid visible displacement of face plane of adjacent members.
7. Where ducts or other equipment prevent the regular spacing of hangers, reinforce the nearest affected hangers and related carrying channels to span the extra distance.
8. Do not support components on main runners or cross runners if weight causes excess deflection.
9. Support fixture loads using supplementary hangers located within 6 inches of each corner, or support components independently.
10. Do not eccentrically load system or induce rotation of runners.
11. Form expansion joints as detailed. Form to accommodate plus or minus 1 inch movement. Maintain visual closure.

3.4 TOLERANCES

A. Maximum Variation from Flat and Level Surface: 1/8 inch in 10 feet.
B. Maximum Variation from Plumb of Grid Members Caused by Eccentric Loads: 2 degrees.

3.5 PROTECTION

A. Protect installed work as required by the manufacturer to maintain product performance, design criteria and warranty.

END OF SECTION

SECTION 096500 - RESILIENT FLOORING

PART 1 GENERAL

1.1 SECTION INCLUDES
- A. Resilient sheet flooring.
- B. Resilient base.

1.2 ADMINISTRATIVE REQUIREMENTS
- A. Preinstallation Meeting: Convene one week before starting work of this section in accordance with Section 013100 - Project Management and Coordination.
  1. Review preparation and installation procedures and coordinating and scheduling required with related work.

1.3 SUBMITTALS
- A. Qualification Data: For installer.
- B. Product Data: Provide data on specified products, describing physical and performance characteristics; including sizes, patterns and colors available; and installation instructions.
- C. Shop Drawings: Indicate seaming plan.
- D. Flooring Sample: Submit two samples, 6 x 6 inch in size illustrating color and pattern for each resilient flooring product specified; heat weld rod samples for selection.
- E. Base and Accessory Samples: Submit manufacturer's complete set of color samples for initial selection.
- F. Certificate: Prior to installation of flooring, submit written certification by flooring manufacturer and adhesive manufacturer that condition of subfloor is acceptable.
- G. Manufacturer's Installation Instructions: Indicate special preparation of substrate, installation and attachment methods, and perimeter conditions requiring special attention.
- H. Warranty: Submit manufacturer warranty and ensure forms have been completed in Owner's name and registered with manufacturer.
- I. Maintenance Data: For user's operation and maintenance of system including:
  1. Methods for maintaining system's materials and finishes.
  2. Precautions about cleaning materials and methods that could be detrimental to components, finishes, and performance.
  3. Include maintenance procedures, recommended maintenance materials, and suggested schedule for cleaning, stripping, and re-waxing.

1.4 MAINTENANCE MATERIAL
- A. Maintenance Materials: Furnish the following for Owner's use in maintenance of project.
  1. Extra Flooring Material: 10 square feet of each type and color.
  2. Extra Wall Base: 20 linear feet of each type and color.

1.5 QUALITY ASSURANCE
- A. Manufacturer Qualifications: Company specializing in the manufacture of work specified in this section with minimum 5 years of experience.
- B. Installer Qualifications: Company specializing in performing the work of this section with minimum 2 years of experience.

1.6 DELIVERY, STORAGE, AND HANDLING
- A. As required by the manufacturer for a warrantable installation of the installed products to meet the Performance and Design Criteria.

1.7 WARRANTY
- A. Provide minimum Manufacturers Limited 5 year commercial warranty for manufacturing defects.

PART 2 PRODUCTS

2.1 DESCRIPTION
- A. Resilient base for transition to other flooring types.

2.2 PERFORMANCE AND DESIGN CRITERIA
- A. Critical Radiant Flux (CRF): Minimum 0.45 watt per square centimeter, when tested in accordance with ASTM E648 or NFPA 253.

2.3 COLOR: RESILIENT BASE
- A. (RES-2) Resilient Base: ASTM F1861, top set Style A straight, and as follows:
  1. Basis of Design: Johnsonite.
  2. Type: Thermoset Rubber Base.
  3. Thickness: 0.125 inch thick.
  4. Material: TS - Thermoset Vulcanized Rubber
  5. Finish: Satin.
  6. Color: 80 Fawn.
  7. Styles: 4-inch standard toe base.
  8. Length: Roll (4 foot sections are not acceptable except as maintenance stock).

2.4 ACCESSORIES
- A. All accessory materials required by the manufacturer for a warrantable installation of the installed products in a manner that meets the Performance and Design Criteria.
- B. Primers, Adhesives, and Seaming Materials:
  1. Waterproof; types recommended by flooring manufacturer.
- C. Moldings, Transition and Edge Strips:
  1. Same material as flooring.

PART 3 EXECUTION

3.1 EXAMINATION
- A. Verify that wall surfaces are smooth and flat within the tolerances specified, are dust-free, and are ready to receive resilient base.
- B. Cementitious Subfloor Surfaces: Verify that substrates meet moisture, internal relative humidity and alkalinity requirements of flooring and adhesive manufacturers.
  1. Obtain instructions if test results are not within limits recommended by resilient flooring manufacturer and adhesive materials manufacturer.
- C. Verify that required floor-mounted utilities are in correct location.

3.2 PREPARATION
- A. Prepare surfaces to receive work in accordance with manufacturer's instructions.

3.3 INSTALLATION
- A. General:
  1. Install all materials in accordance with manufacturer's instructions based on conditions present.
  2. Fit joints tightly.

3.4 CLEANING
- A. Remove excess adhesive from floor, base, and wall surfaces without damage.
- B. Initial cleaning and finishing are the responsibility of the contractor.
  1. Follow manufacturer's recommendations for initial cleaning and finishing procedures.

3.5 PROTECTION
- A. Protect installed work as required by the manufacturer to maintain product performance, design criteria, and warranty.

END OF SECTION

SECTION 096566 - RESILIENT ATHLETIC FLOORING

PART 1 GENERAL

1.1 SECTION INCLUDES
- A. Sheet athletic flooring.

1.2 ADMINISTRATIVE REQUIREMENTS
- A. Preinstallation Meeting: Convene one week before starting work of this section in accordance with Section 013100 - Project Management and Coordination.
  1. Review preparation and installation procedures and coordinating and scheduling required with related work.

1.3 SUBMITTALS
- A. Qualification Data: For manufacturer and installer.
- B. Product Data: Provide product criteria, characteristics, accessories, jointing and seaming methods, and termination conditions.
- C. Shop Drawings: Indicate control joints and expansion joints, and detailing at projections and penetrations.
- D. Sample: Of each type and finish of flooring.
- E. Manufacturer's Installation Instructions: Indicate special preparation of substrate, installation and attachment methods, and perimeter conditions requiring special attention.
- F. Warranty: Submit manufacturer warranty and ensure forms have been completed in Owner's name and registered with manufacturer.
- G. Maintenance Data: For user's operation and maintenance of system including:
  1. Methods for maintaining system's materials and finishes.
  2. Precautions about cleaning materials and methods that could be detrimental to components, finishes, and performance.
  3. Recommended schedule of maintenance.

1.4 MAINTENANCE MATERIAL
- A. Provide extra stock materials from same production run, for use in facility operations and maintenance approximately 5% of the total floor surface for each color, surface texture and format of flooring.

1.5 QUALITY ASSURANCE
- A. Manufacturer Qualifications: Company specializing in the manufacture of work specified in this section with minimum 5 years of experience.
- B. Installer Qualifications: Company specializing in performing the work of this section with minimum of 5 years of experience.

1.6 DELIVERY, STORAGE, AND HANDLING
- A. As required by the manufacturer for a warrantable installation of the installed products to meet the Performance and Design Criteria.

1.7 WARRANTY
- A. Installation Warranty: Contractor shall correct defective Work within a 2 year period after Date of Substantial Completion.

PART 2 PRODUCTS

2.1 DESCRIPTION
- A. Resilient sheet floor products intended for a fitness environment.

2.2 PERFORMANCE AND DESIGN CRITERIA
- A. Critical Radiant Flux: Less than 0.45 tested in accordance with ASTM E648.
- B. Smoke Development: Less than 450 tested in accordance with ASTM E662.
- C. Antimicrobial: 99.99 percent reduction tested in accordance with ASTM E2180.
- D. ADA compliant as per ASTM D2047.
- E. Greenguard Gold Certification per UL2818.

F. 100 percent recyclable.

2.3 MANUFACTURERS

A. Substitutions for products by manufacturers other than those listed: See Section 016000 - Product Requirements.

2.4 SHEET ATHLETIC FLOORING

A. (RES-) Rubber Athletic Sheet Flooring:
1. Basis of Design: Ecosurface Ecofit.
2. Features:
a. Phthalate-free, halogen-free, heavy metal-free, formaldehyde-free, isocyanate free and BPA-free.
b. Thickness: 3/8-inch.
c. Size: 4-feet x 25-feet.
d. Color: Bedrock 806.

2.5 ACCESSORIES

A. All accessory materials required by the manufacturer for a warrantable installation of the installed products in a manner that meets the Performance and Design Criteria.
B. Rubber Transition:
1. Basis if Design: Mannington Commercial.
2. Substitutions for products by manufacturers other than those listed: See Section 016000 - Product Requirements.
3. Color: Match flooring color.
C. Manufacturer's accessories required by the project:
1. Adhesives:
a. As recommended by manufacture in printed adhesive guidelines based on surface impacts and dynamic loads.

PART 3 EXECUTION

3.1 EXAMINATION

A. Verify existing conditions meet the manufacturer's requirements before starting work, free of cracks that might telegraph through flooring, clean, dry, and free of curing compounds, surface hardeners, and other chemicals that might interfere with bonding of flooring to substrate.
B. Verify that wall surfaces are smooth and flat within the tolerances specified, are dust-free, and are ready to receive resilient base.
C. Cementitious Subfloor Surfaces: Verify that substrates meet moisture, internal relative humidity and alkalinity requirements of flooring and adhesive manufacturers.
1. Obtain instructions if test results are not within limits recommended by flooring manufacturer and adhesive manufacturer.
D. Verify that required floor-mounted utilities are in correct location.

3.2 PREPARATION

A. Prepare surfaces to receive work in accordance with manufacturer's instructions.

3.3 INSTALLATION

A. General: Install all materials in accordance with manufacturer's instructions based on conditions present.
B. Sheet Sport Flooring: Install as glue down.
C. Install line marking in accordance with manufacturer's instructions after all flooring installation has been approved.

3.4 CLEANING

A. Wait at least a minimum of 72 hours after the resilient athletic flooring has been completely installed before performing initial maintenance.
B. Performing initial maintenance as recommended by manufacturer.

3.5 PROTECTION

A. Protect installed work as required by the manufacturer to maintain product performance, design criteria, and warranty.

END OF SECTION

SECTION 096813 - TILE CARPETING

PART 1 GENERAL

1.1 SECTION INCLUDES
- A. Carpet tile.

1.2 SUBMITTALS
- A. Qualification Data: For installer.
- B. Product Data: Provide data on specified products, describing physical and performance characteristics; including sizes, patterns and colors available; and installation instructions.
- C. Shop Drawings: Indicate layout of joints.
- D. Flooring Sample: Submit two carpet tiles illustrating color and pattern design for each carpet color selected.
- E. Accessory Samples: Submit manufacturer's complete set of color samples for Architect's initial selection.
- F. Manufacturer's Installation Instructions: Indicate special preparation of substrate, installation and attachment methods, and perimeter conditions requiring special attention.
- G. Warranty: Submit manufacturer's warranty and ensure forms have been completed in Owner's name and registered with manufacturer.
- H. Maintenance Data: For user operation and maintenance of materials including:
  1. Methods for maintaining materials and finishes.
  2. Precautions about cleaning materials and methods that could be detrimental to components, finishes, and performance.
  3. Include maintenance procedures, recommended maintenance materials, and suggested schedule for cleaning.

1.3 MAINTENANCE MATERIAL
- A. Maintenance Materials: Furnish the following for Owner's use in maintenance of project.
  1. Extra Flooring Material: 3 percent of each type and color (minimum of 10 yards) each type and color.

1.4 QUALITY ASSURANCE
- A. Installer Qualifications: Company specializing in performing the work of this section with minimum 3 years of experience.

1.5 DELIVERY, STORAGE, AND HANDLING
- A. As required by the manufacturer for a warrantable installation of the installed products to meet the Performance and Design Criteria.

1.6 WARRANTY
- A. Provide minimum Manufacturers Limited 5 year commercial warranty for manufacturing defects.

PART 2 PRODUCTS

2.1 DESCRIPTION
- A. Carpet tile flooring installed loose laid or fully adhered.

2.2 PERFORMANCE AND DESIGN CRITERIA
- A. Critical Radiant Flux (CRF): Minimum 0.45 watt per square centimeter, when tested in accordance with ASTM E648 or NFPA 253.
- B. Surface Flammability Ignition: Pass ASTM D2859 (the "pill test").

2.3 CARPET TILE
- A. Carpet Tile: Manufactured in single dye lot, conforming to the following criteria:
  1. (CPT-1) Manufacturer: Mohawk
     - a. Product: Learn & Live
     - b. Color: 858 Bronze Blast
     - c. Size: 12" x 24".

2.4 ACCESSORIES

A. All accessory materials required by the manufacturer for a warrantable installation of the installed products in a manner that meets the Performance and Design Criteria.
B. Subfloor Filler: Type recommended by adhesive material manufacturer.
C. Primers, Adhesives, and Seaming Materials: Waterproof; types recommended by flooring manufacturer.
D. All accessory materials required by the manufacturer for a warrantable installation of the installed products in a manner that meets the Performance and Design Criteria.

PART 3 EXECUTION

3.1 EXAMINATION

A. Verify existing conditions meet the manufacturer's requirements before starting work, free of cracks that might telegraph through flooring, clean, dry, and free of curing compounds, surface hardeners, and other chemicals that might interfere with bonding of flooring to substrate.
B. Verify that required floor-mounted utilities are in correct location.

3.2 PREPARATION

A. Prepare surfaces to receive work in accordance with manufacturer's instructions.

3.3 INSTALLATION

A. General:
1. Install all materials in accordance with manufacturer's instructions based on conditions present and CRI Carpet Installation Standard.
2. Blend carpet from different cartons to ensure minimal variation in color match.
3. Cut carpet tile clean. Fit carpet tight to intersection with vertical surfaces without gaps.
4. Lay carpet tile in pattern scheduled in Finish Legend on Drawings, with pile direction parallel to next unit, set aligned as indicated on shop drawings.
5. Starting installation constitutes acceptance of subfloor conditions.
6. Fit joints tightly.
7. Scribe flooring to walls, columns, cabinets, floor outlets, and other appurtenances to produce tight joints.
8. Adhere carpet tile to substrate along centerline of rooms, at perimeter of rooms, where tiles are cut, and at 15 foot (4.5 m) intervals throughout rooms. Lay remainder of tile dry over substrate.
9. Trim carpet tile neatly at walls and around interruptions.
10. Install edge strips at unprotected or exposed edges, where flooring terminates, and where indicated.
a. Metal Strips: Attach to substrate before installation of flooring using stainless steel screws.
b. Resilient Strips: Attach to substrate using adhesive.

3.4 CLEANING

A. Remove excess adhesive from floor, base, and wall surfaces without damage.
B. Clean and vacuum carpet tile surfaces in accordance with manufacturer's instructions.
C. Dispose of all waste material in accordance with project's Waste Management Plan.

3.5 PROTECTION

A. Protect installed work as required by the manufacturer to maintain product performance, design criteria, and warranty.

END OF SECTION

SECTION 099113 - EXTERIOR PAINTING

PART 1 - GENERAL

1.1 RELATED DOCUMENTS

A. Drawings and general provisions of the Contract, including General and Supplementary Conditions and Division 01 Specification Sections, apply to this Section.

1.2 SUMMARY

A. Section includes surface preparation and the application of paint systems on the following exterior substrates:
   1. Fiber Cement.
   2. Galvanized metal.
   3. Aluminum (not anodized or otherwise coated).
   4. Wood.

B. Related Requirements:
   1. Section 099123 "Interior Painting" for surface preparation and the application of paint systems on interior substrates.

1.3 DEFINITIONS

A. Gloss Level 1: Not more than 5 units at 60 degrees and 10 units at 85 degrees, according to ASTM D 523.

B. Gloss Level 3: 10 to 25 units at 60 degrees and 10 to 35 units at 85 degrees, according to ASTM D 523.

C. Gloss Level 4: 20 to 35 units at 60 degrees and not less than 35 units at 85 degrees, according to ASTM D 523.

D. Gloss Level 5: 35 to 70 units at 60 degrees, according to ASTM D 523.

E. Gloss Level 6: 70 to 85 units at 60 degrees, according to ASTM D 523.

F. Gloss Level 7: More than 85 units at 60 degrees, according to ASTM D 523.

1.4 ACTION SUBMITTALS

A. Product Data: For each type of product. Include preparation requirements and application instructions.

B. Samples for Initial Selection: For each type of topcoat product.

C. Product List: For each product indicated, include the following:
   1. Use same designations indicated on Drawings and in schedules.
   2. Printout of current "MPI Approved Products List" for each product category specified, with the proposed product highlighted.
   3. VOC content.

1.5 DELIVERY, STORAGE, AND HANDLING

A. Store materials not in use in tightly covered containers in well-ventilated areas with ambient temperatures continuously maintained at not less than 45 deg F (7 deg C).
   1. Maintain containers in clean condition, free of foreign materials and residue.
   2. Remove rags and waste from storage areas daily.

1.6 FIELD CONDITIONS

A. Apply paints only when temperature of surfaces to be painted and ambient air temperatures are between 50 and 95 deg F (10 and 35 deg C).

B. Do not apply paints in snow, rain, fog, or mist; when relative humidity exceeds 85 percent; at temperatures less than 5 deg F (3 deg C) above the dew point; or to damp or wet surfaces.

PART 2 - PRODUCTS

2.1 MANUFACTURERS

A. Subject to compliance with requirements, provide products by one of the following:
   1. Kelly-Moore Paints.
   2. Sherwin-Williams Company (The).

B. Subject to compliance with requirements, provide product listed in other Part 2 articles for the paint category indicated.

2.2 PAINT, GENERAL

A. MPI Standards: Provide products that comply with MPI standards indicated and that are listed in its "MPI Approved Products List."

B. Material Compatibility:

1. Provide materials for use within each paint system that are compatible with one another and substrates indicated, under conditions of service and application as demonstrated by manufacturer, based on testing and field experience.
2. For each coat in a paint system, provide products recommended in writing by manufacturers of topcoat for use in paint system and on substrate indicated.

C. VOC Content: Provide materials that comply with VOC limits of authorities having jurisdiction.

D. Colors: As selected by Architect from manufacturer's full range.

2.3 PRIMERS/SEALERS

A. Primer, Alkali Resistant, Water Based: MPI #3.

B. Wood-Knot Sealer: Sealer recommended in writing by topcoat manufacturer for exterior use in paint system indicated.

2.4 METAL PRIMERS

A. Primer, Galvanized, Water Based: MPI #134.

B. Primer, Quick Dry, for Aluminum: MPI #95.

2.5 WOOD PRIMERS

A. Primer, Latex for Exterior Wood: MPI #6.

2.6 WATER-BASED PAINTS

A. Latex, Exterior Semi-Gloss (Gloss Level 5): MPI #11.

2.7 SOURCE QUALITY CONTROL

A. Testing of Paint Materials: Owner reserves the right to invoke the following procedure:

1. Owner will engage the services of a qualified testing agency to sample paint materials. Contractor will be notified in advance and may be present when samples are taken. If paint materials have already been delivered to Project site, samples may be taken at Project site. Samples will be identified, sealed, and certified by testing agency.
2. Testing agency will perform tests for compliance with product requirements.
3. Owner may direct Contractor to stop applying paints if test results show materials being used do not comply with product requirements. Contractor shall remove noncomplying paint materials from Project site, pay for testing, and repaint surfaces painted with rejected materials. Contractor will be required to remove rejected materials from previously painted surfaces if, on repainting with complying materials, the two paints are incompatible.

PART 3 - EXECUTION

3.1 EXAMINATION

A. Examine substrates and conditions, with Applicator present, for compliance with requirements for maximum moisture content and other conditions affecting performance of the Work.

B. Maximum Moisture Content of Substrates: When measured with an electronic moisture meter as follows:

1. Wood: 15 percent.

C. Verify suitability of substrates, including surface conditions and compatibility with existing finishes and primers.

D. Proceed with coating application only after unsatisfactory conditions have been corrected.

1. Application of coating indicates acceptance of surfaces and conditions.

3.2 PREPARATION

A. Comply with manufacturer's written instructions and recommendations in "MPI Manual" applicable to substrates and paint systems indicated.

B. Remove hardware, covers, plates, and similar items already in place that are removable and are not to be painted. If removal is impractical or impossible because of size or weight of item, provide surface-applied protection before surface preparation and painting.
   1. After completing painting operations, use workers skilled in the trades involved to reinstall items that were removed. Remove surface-applied protection.
C. Clean substrates of substances that could impair bond of paints, including dust, dirt, oil, grease, and incompatible paints and encapsulants.
   1. Remove incompatible primers and reprime substrate with compatible primers or apply tie coat as required to produce paint systems indicated.
D. Concrete Substrates: Remove release agents, curing compounds, efflorescence, and chalk. Do not paint surfaces if moisture content or alkalinity of surfaces to be painted exceeds that permitted in manufacturer's written instructions.
E. Galvanized-Metal Substrates: Remove grease and oil residue from galvanized sheet metal by mechanical methods to produce clean, lightly etched surfaces that promote adhesion of subsequently applied paints.
F. Aluminum Substrates: Remove loose surface oxidation.
G. Wood Substrates:
   1. Scrape and clean knots. Before applying primer, apply coat of knot sealer recommended in writing by topcoat manufacturer for exterior use in paint system indicated.
   2. Sand surfaces that will be exposed to view, and dust off.
   3. Prime edges, ends, faces, undersides, and backsides of wood.
   4. After priming, fill holes and imperfections in the finish surfaces with putty or plastic wood filler. Sand smooth when dried.

3.3 APPLICATION

A. Apply paints according to manufacturer's written instructions and recommendations in "MPI Manual."
   1. Use applicators and techniques suited for paint and substrate indicated.
   2. Paint surfaces behind movable items same as similar exposed surfaces. Before final installation, paint surfaces behind permanently fixed items with prime coat only.
   3. Paint both sides and edges of exterior doors and entire exposed surface of exterior door frames.
   4. Paint entire exposed surface of window frames and sashes.
   5. Do not paint over labels of independent testing agencies or equipment name, identification, performance rating, or nomenclature plates.
   6. Primers specified in painting schedules may be omitted on items that are factory primed or factory finished if acceptable to topcoat manufacturers.
B. Tint undercoats same color as topcoat, but tint each undercoat a lighter shade to facilitate identification of each coat if multiple coats of same material are to be applied. Provide sufficient difference in shade of undercoats to distinguish each separate coat.
C. If undercoats or other conditions show through topcoat, apply additional coats until cured film has a uniform paint finish, color, and appearance.
D. Apply paints to produce surface films without cloudiness, spotting, holidays, laps, brush marks, roller tracking, runs, sags, ropiness, or other surface imperfections. Cut in sharp lines and color breaks.
E. Painting Fire Suppression, Plumbing, HVAC, Electrical, Communication, and Electronic Safety and Security Work:
   1. Paint the following work where exposed to view:
      a. Equipment, including panelboards and switch gear.
      b. Uninsulated metal piping.
      c. Pipe hangers and supports.

d. Metal conduit.
e. Tanks that do not have factory-applied final finishes.

3.4 FIELD QUALITY CONTROL

A. Dry Film Thickness Testing: Owner may engage the services of a qualified testing and inspecting agency to inspect and test paint for dry film thickness.
1. Contractor shall touch up and restore painted surfaces damaged by testing.
2. If test results show that dry film thickness of applied paint does not comply with paint manufacturer's written recommendations, Contractor shall pay for testing and apply additional coats as needed to provide dry film thickness that complies with paint manufacturer's written recommendations.

3.5 CLEANING AND PROTECTION

A. At end of each workday, remove rubbish, empty cans, rags, and other discarded materials from Project site.
B. Remove spattered paints by washing, scraping, or other methods. Do not scratch or damage adjacent finished surfaces.
C. Protect work of other trades against damage from paint application. Correct damage to work of other trades by cleaning, repairing, replacing, and refinishing, as approved by Architect, and leave in an undamaged condition.
D. At completion of construction activities of other trades, touch up and restore damaged or defaced painted surfaces.

3.6 EXTERIOR PAINTING SCHEDULE

A. Concrete Substrates, Nontraffic Surfaces:
1. Latex System:
a. Prime Coat: Primer, alkali resistant, water based, MPI #3.
b. Intermediate Coat: Latex, exterior, matching topcoat.
c. Topcoat: Latex, exterior semi-gloss (Gloss Level 5), MPI #11.

B. Galvanized-Metal Substrates:
1. Latex System:
a. Prime Coat: Primer, galvanized, water based, MPI #134.
b. Prime Coat: Primer, galvanized metal, as recommended in writing by topcoat manufacturer for exterior use on galvanized-metal substrates with topcoat indicated.
c. Intermediate Coat: Latex, exterior, matching topcoat.
d. Topcoat: Latex, exterior semi-gloss (Gloss Level 5), MPI #11.

C. Aluminum Substrates:
1. Latex System:
a. Prime Coat: Primer, quick dry, for aluminum, MPI #95.
b. Intermediate Coat: Latex, exterior, matching topcoat.
c. Topcoat: Latex, exterior semi-gloss (Gloss Level 5), MPI #11.

D. Wood Substrates: Including wood trim.
1. Latex System:
a. Prime Coat: Primer, latex for exterior wood, MPI #6.
b. Intermediate Coat: Latex, exterior, matching topcoat.
c. Topcoat: Latex, exterior semi-gloss (Gloss Level 5), MPI #11.

END OF SECTION

SECTION 099123 - INTERIOR PAINTING

PART 1 - GENERAL

1.1 RELATED DOCUMENTS

A. Drawings and general provisions of the Contract, including General and Supplementary Conditions and Division 01 Specifications Sections, apply to this Section.

1.2 SUMMARY

A. This Section includes surface preparation and the application of paint systems on the following interior substrates:
   1. Steel.
   2. Galvanized metal.
   3. Wood.
   4. Gypsum board.

B. Related Sections include the following:
   1. Division 06 Sections for shop priming carpentry with primers specified in this Section.

1.3 SUBMITTALS

A. Product Data: For each type of product indicated.

B. Samples for verification for each color and finish specified.

C. Product List: For each product indicated, include the following:
   1. Cross reference to paint system and locations of application areas. Use same designations indicated on Drawings.
   2. Printout of current "MPI Approved Products List" for each product category specified in Part 2, with the proposed product highlighted.

1.4 QUALITY ASSURANCE

A. Products: Complying with MPI standards indicated and listed in "MPI Approved Products List".

B. Preparation and Workmanship: Comply with requirements in "MPI Architectural Painting Specification Manual" for products and paint systems indicated.

1.5 DELIVERY, STORAGE AND HANDLING

A. Store materials not in use in tightly covered containers in well-ventilated areas with ambient temperatures continuously maintained at not less that 45 deg. F.
   1. Maintain containers in clean condition, free of foreign materials and residue.
   2. Remove rags and waste from storage areas daily.

1.6 PROJECT CONDITIONS

A. Apply paints only when temperature of surfaces to be painted and ambient air temperatures are between 50 and 95 deg F.

B. Do not apply paints when relative humidity exceeds 85 percent; at temperatures less than 5 deg F above the dew point, or to damp or wet surfaces.

1.7 EXTRA MATERIALS

A. Furnish extra materials described below that are from same production run (batch mix) as materials applied and that are packaged for storage and identified with labels describing contents.
   1. Quantity: Furnish an additional 5 percent, but not less than 1 gal of each material and color applied.

PART 2 - PRODUCTS

2.1 MANUFACTURERS

A. Available Manufacturers: Subject to compliance with requirements, manufacturers offering products that may be incorporated into the Work include, but are not limited to, the following:
   1. Benjamin Moore & Co.
   2. Kelly-Moore Paints.
   3. Parker Paint Mfg. Co. Inc.

4. Rodda Paint Co.
5. Sherwin-Williams Company (The).
6. Miller Paint.

2.2 PAINT, GENERAL

A. Material Compatibility:
1. Provide materials for use within each paint system that are compatible with one another and substrates indicated, under conditions of service and application as demonstrated by manufacturer, based on testing and field experience.
2. For each coat in a paint system, provide products recommended in writing by manufacturers of topcoat for use in paint system and on substrate indicated.

B. VOC Content of Field-Applied Interior Paints and Coatings: Provide products that comply with the following limits for VOC content, exclusive of colorants added to a tint base, when calculated according to 40 CFR 59, Subpart D (EPA Method 24); these requirements do not apply to paints and coatings that are applied in a fabrication or finishing shop:
1. Flat Paints, Coatings, and Primers: VOC content of not more than 50 g/L.
2. Nonflat Paints, Coatings, and Primers: VOC content of not more than 150 g/L.
3. Anti-Corrosive and Anti-Rust Paints Applied to Ferrous Metals: VOC not more than 250 g/L.
4. Floor Coatings: VOC not more than 100 g/L.
5. Shellacs, Clear: VOC not more than 730 g/L.
6. Shellacs, Pigmented: VOC not more than 550 g/L.
7. Flat Topcoat Paints: VOC content of not more than 50 g/L.
8. Nonflat Topcoat Paints: VOC content of not more than 150 g/L.
9. Anti-Corrosive and Anti-Rust Paints Applied to Ferrous Metals: VOC not more than 250 g/L.
10. Floor Coatings: VOC not more than 100 g/L.
11. Shellacs, Clear: VOC not more than 730 g/L.
12. Shellacs, Pigmented: VOC not more than 550 g/L.
13. Primers, Sealers, and Undercoaters: VOC content of not more than 200 g/L.
14. Dry-Fog Coatings: VOC content of not more than 400 g/L.
15. Zinc-Rich Industrial Maintenance Primers: VOC content of not more than 340 g/L.
16. Pre-Treatment Wash Primers: VOC content of not more than 420 g/L.

C. Chemical Components of Field-Applied Interior Paints and Coatings: Provide topcoat paints and anti-corrosive and anti-rust paints applied to ferrous metals that comply with the following chemical restrictions; these requirements do not apply to paints and coatings that are applied in a fabrication or finishing shop:
1. Aromatic Compounds: Paints and coatings shall not contain more than 1.0 percent by weight of total aromatic compounds (hydrocarbon compounds containing one or more benzene rings).
2. Restricted Components: Paints and coatings shall not contain any of the following:
   a. Acrolein.
   b. Acrylonitrile.
   c. Antimony.
   d. Benzene.
   e. Butyl benzyl phthalate.
   f. Cadmium.
   g. Di (2-ethylhexyl) phthalate.
   h. Di-n-butyl phthalate.
   i. Di-n-octyl phthalate.
   j. 1,2-dichlorobenzene.

k. Diethyl phthalate.
l. Dimethyl phthalate.
m. Ethylbenzene.
n. Formaldehyde.
o. Hexavalent chromium.
p. Isophorone.
q. Lead.
r. Mercury.
s. Methyl ethyl ketone.
t. Methyl isobutyl ketone.
u. Methylene chloride.
v. Naphthalene.
w. Toluene (methylbenzene).
x. 1,1,1-trichloroethane.
y. Vinyl chloride.

D. Colors: As indicated in a color schedule on drawings.

2.3 PRIMERS/SEALERS
A. Interior Latex Primer/Sealer: MPI #50.
B. Wood-Knot Sealer: Sealer recommended in writing by topcoat manufacturer for use in paint systems indicated.

2.4 METAL PRIMERS
A. Alkyd Anticorrosive Metal Primer: MPI #79.
B. Quick-Drying Alkyd Metal Primer: MPI #76.
C. Waterborne Galvanized-Metal Primer: MPI #134.

2.5 WOOD PRIMERS
A. Interior Latex-Based Wood Primer: MPI #39.

2.6 LATEX PAINTS
A. Institutional Low-Odor/VOC Latex (Semigloss): MPI #147 (Gloss Level 5).
B. High-Performance Architectural Latex (Semigloss): MPI #141 (Gloss Level 5).

2.7 ALKYD PAINTS
A. Interior Alkyd (Semigloss): MPI #47 (Gloss Level 5).

2.8 OIL BASED WOOD STAIN: MPI #90
A. Interior Oil Based Wood Stain.

PART 3 - EXECUTION

3.1 EXAMINATION
A. Examine substrates and conditions, with Applicator present, for compliance with requirements for maximum moisture content and other conditions affecting performance of work.
B. Maximum Moisture Content of Substrates: When measured with an electronic moisture meter as follows:
1. Wood: 15 percent.
2. Gypsum Board: 12 percent.
C. Verify suitability of substrates, including surface conditions and compatibility with existing finishes and primers.
D. Begin coating application only after unsatisfactory conditions have been corrected and surfaces are dry.
1. Beginning coating application constitutes Contractor's acceptance of substrates and conditions.

3.2 PREPARATION
A. Comply with manufacturer's written instructions and recommendations in "MPI Architectural Painting Specification Manual" applicable to substrates indicated.

B. Remove plates, machined surfaces, and similar items already in place that are not to be painted. If removal is impractical or impossible because of size or weight of item, provide surface-applied protection before surface preparation and painting.
   1. After completing painting operations, use workers skilled in the trades involved to reinstall items that were removed. Remove surface-applied protection if any.
   2. Do not paint over labels of independent testing agencies or equipment name, identification, performance rating, or nomenclature plates.
C. Clean substrates of substances that could impair bond of paints, including dirt, oil, grease, and incompatible paints and encapsulants.
   1. Remove incompatible primers and reprime substrate with compatible primers as required to produce paint systems indicated.
D. Steel Substrates: Remove rust and loose mill scale. Clean using methods recommended in writing by paint manufacturer.
E. Galvanized-Metal Substrates: Remove grease and oil residue from galvanized sheet metal fabricated from coil stock by mechanical methods to produce clean, lightly etched surfaces that promote adhesion of subsequently applied paints.
F. Wood Substrates:
   1. Scrape and clean knots, and apply coat of knot sealer before applying primer.
   2. Sand surfaces that will be exposed to view, and dust off.
   3. Prime edges, ends, faces, undersides, and backsides of wood.
   4. After priming, fill holes and imperfections in the finish surfaces with putty or plastic wood filler. Sand smooth when dried.
G. Gypsum Board Substrates: Do not begin paint application until finishing compound is dry and sanded smooth.

3.3 APPLICATION

A. Apply paints according to manufacturer's written instructions.
   1. Use applicators and techniques suited for paint and substrate indicated.
   2. Paint surfaces behind movable equipment and furniture same as similar exposed surfaces. Before final installation, paint surfaces behind permanently fixed equipment or furniture with prime coat only.
   3. Paint front and backsides of access panels, removable or hinged covers, and similar hinged items to match exposed surfaces.
B. Tint each undercoat a lighter shade to facilitate identification of each coat if multiple coats of same material are to be applied. Tint undercoats to match color of topcoat, but provide sufficient difference in shade of undercoats to distinguish each separate coat.
C. If undercoats or other conditions show through topcoat, apply additional coats until cured film has a uniform paint finish, color, and appearance.
D. Apply paints to produce surface films without cloudiness, spotting, holidays, laps, brush marks, roller tracking, runs, sags, ropiness, or other surface imperfections. Cut in sharp lines and color breaks.
E. Painting Mechanical and Electrical Work: Paint items exposed in equipment rooms and occupied spaces including, but not limited to, the following:
   1. Mechanical Work:
      a. Uninsulated metal piping.
      b. Uninsulated plastic piping.
      c. Pipe hangers and supports.
      d. Tanks that do not have factory-applied final finishes.
      e. Visible portions of internal surfaces of metal ducts, without liner, behind air inlets and outlets.

f. Duct, equipment, and pipe insulation having cotton or canvas insulation covering or other paintable jacket material.
g. Mechanical equipment that is indicated to have a factory-primed finish for field painting.

2. Electrical Work:
a. Switchgear.
b. Panelboards.
c. Electrical equipment that is indicated to have a factory-primed finish for field painting.

3.4 FIELD QUALITY CONTROL

A. Testing of Paint Materials: Owner reserves the right to invoke the following procedure at any time and as often as Owner deems necessary during the period when paints are being applied:
1. Owner will engage the services of a qualified testing agency to sample paint materials being used. Samples of material delivered to Project site will be taken, identified, sealed, and certified in presence of Contractor.
2. Testing agency will perform tests for compliance with product requirements.
3. Owner may direct Contractor to stop applying paints if test results show materials being used do not comply with product requirements. Contractor shall remove noncomplying-paint materials from Project site, pay for testing, and repaint surfaces painted with rejected materials. Contractor will be required to remove rejected materials from previously painted surfaces if, on repainting with complying materials, the two paints are incompatible.

3.5 CLEANING AND PROTECTION

A. At end of each workday, remove rubbish, empty cans, rags, and other discarded materials from Project site.
B. Remove spattered paints by washing, scraping, or other methods. Do not scratch or damage adjacent finished surfaces.
C. Protect work of other trades against damage from paint application. Correct damage to work of other trades by cleaning, repairing, replacing, and refinishing, as approved by Architect, and leave in an undamaged condition.
D. At completion of construction activities of other trades, touch up and restore damaged or defaced painted surfaces.

3.6 INTERIOR PAINTING SCHEDULE

A. Steel Substrates:
1. High-Performance Architectural Latex System: MPI INT 5.1R.
a. Prime Coat: Quick-drying alkyd metal primer.
b. Intermediate Coat: High-performance architectural latex matching topcoat.
c. Topcoat: High-performance architectural latex semi-gloss.

B. Galvanized-Metal Substrates:
1. High-Performance Architectural Latex System: MPI INT 5.3M.
a. Prime Coat: Waterborne galvanized-metal primer.
b. Intermediate Coat: High-performance architectural latex matching topcoat.
c. Topcoat: High-performance architectural semi-gloss.

C. Gypsum Board Substrates Standard:
1. Alkyd Over Latex Primer System: MPI INT 9.2C.
a. Prime Coat: Interior latex primer/sealer.
b. Intermediate Coat: Interior latex matching topcoat.
c. Topcoat: Interior latex eggshell.

D. Gypsum Board and Plywood Substrates at wet locations and Apparatus Bay walls:
1. Alkyd Over Latex Primer System: MPI INT 9.2C-G5
a. Prime Coat: Interior latex primer/sealer.
b. Intermediate Coat: Interior alkyd matching topcoat.

c. Topcoat: Interior alkyd egg semi-gloss

3.7 INTERIOR PAINT COLORS

A. Sherwin-Williams SW7012 Creamy to match existing.
B. Sherwin-Williams SW2820 Downing Earth to match existing.
C. Sherwin-Williams SW6222 Riverway to match existing.
D. Sherwin-Williams SW6129 Restrained Gold to match existing.

END OF SECTION

SECTION 099300 - STAINING AND TRANSPARENT FINISHING

PART 1 - GENERAL

1.1 RELATED DOCUMENTS

A. Drawings and general provisions of the Contract, including General and Supplementary Conditions and Division 01 Specification Sections, apply to this Section.

1.2 SUMMARY

A. Section includes surface preparation and application of wood finishes on the following substrates:
   1. Interior Substrates:
      a. Miscellaneous wood trim.

B. Related Requirements:
   1. Division 09 Section “Exterior Painting”.

C. Division 09 Section "Interior Painting".

1.3 DEFINITIONS

A. Gloss Level 1: Not more than 5 units at 60 degrees and 10 units at 85 degrees, according to ASTM D 523.

1.4 SUBMITTALS

A. Product Data: For each type of product indicated. Include preparation requirements and application instructions.

B. Samples for approval or Initial Selection: For each type of product indicated.

C. Product List: For each product indicated, include the following:
   1. Cross-reference to finish system and locations of application areas. Use same designations indicated on Drawings and in schedules.

D. Printout of current "MPI Approved Products List" for each product category specified in Part 2, with the product proposed for use highlighted.

1.5 QUALITY ASSURANCE

A. Mockups: Apply mockups of each finish system indicated and each color selected to verify preliminary selections made under sample submittals and to demonstrate aesthetic effects and set quality standards for materials and execution.
   1. Architect will select one surface to represent surfaces and conditions for application of each type of finish system and substrate.
      a. Horizontal Surfaces: Provide samples of at least 100 sq. ft.
      b. Other Items: Architect will designate items or areas required.
   2. Final approval of stain color selections will be based on mockups.
      a. If preliminary stain color selections are not approved, apply additional mockups of additional stain colors selected by Architect at no added cost to Owner.

1.6 1.6 DELIVERY, STORAGE, AND HANDLING

A. Store materials not in use in tightly covered containers in well-ventilated areas with ambient temperatures continuously maintained at not less than 45 deg F.
   1. Maintain containers in clean condition, free of foreign materials and residue.

1.7 REMOVE RAGS AND WASTE FROM STORAGE AREAS DAILY.

1.8 FIELD CONDITIONS

A. Apply finishes only when temperature of surfaces to be finished and ambient air temperatures are between 50 and 95 deg F.

B. Do not apply finishes when relative humidity exceeds 85 percent; at temperatures less than 5 deg F above the dew point; or to damp or wet surfaces.

C. Do not apply exterior finishes in snow, rain, fog, or mist.

PART 2 - PRODUCTS

2.1 MANUFACTURERS

A. Benjamin Moore & Co.
B. Kelly-Moore Paints.
C. Parker Paint Mfg. Co. Inc.
D. Rodda Paint Co.
E. Sherwin-Williams Company (The).
1. MATERIALS, GENERAL
a. MPI Standards: Provide products that comply with MPI standards indicated and that are listed in its "MPI Approved Products List."
b. Material Compatibility:
F. Provide materials for use within each finish system that are compatible with one another and substrates indicated, under conditions of service and application as demonstrated by manufacturer, based on testing and field experience.
G. For each coat in a finish system, provide products recommended in writing by manufacturers of topcoat for use in finish system and on substrate indicated.

2.2 WOOD FILLERS

A. Wood Filler Paste: MPI #91.

2.3 PRIMERS AND SEALERS

A. Shellac: MPI #88.

2.4 POLYURETHANE VARNISHES

A. Varnish, Aliphatic Polyurethane, Two-Component (Gloss Level 3): MPI #78.

2.5 SOURCE QUALITY CONTROL

A. Testing of Materials: Owner reserves the right to invoke the following procedure:
1. Owner may engage the services of a qualified testing agency to sample wood finishing materials. Contractor will be notified in advance and may be present when samples are taken. If materials have already been delivered to Project site, samples may be taken at Project site. Samples will be identified, sealed, and certified by testing agency.
2. Testing agency will perform tests for compliance with product requirements.
3. Owner may direct Contractor to stop applying wood finishes if test results show materials being used do not comply with product requirements. Contractor shall remove noncomplying materials from Project site, pay for testing, and refinish surfaces finished with rejected materials. Contractor will be required to remove rejected materials from previously finished surfaces before refinishing with complying materials if the two finishes are incompatible or produce results that, in the opinion of the Architect, are aesthetically unacceptable.

PART 3 - EXECUTION

3.1 EXAMINATION

A. Examine substrates and conditions, with Applicator present, for compliance with requirements for maximum moisture content and other conditions affecting performance of the Work.
B. Maximum Moisture Content of Exterior Wood Substrates: 15 percent, when measured with an electronic moisture meter.
C. Maximum Moisture Content of Interior Wood Substrates: 13 percent, when measured with an electronic moisture meter.
D. Verify suitability of substrates, including surface conditions and compatibility with existing finishes and primers.
E. Proceed with finish application only after unsatisfactory conditions have been corrected.
F. Beginning finish application constitutes Contractor's acceptance of substrates and conditions.

3.2 PREPARATION

A. Comply with manufacturer's written instructions and recommendations in "MPI Architectural Painting Specification Manual" applicable to substrates indicated.

B. Clean and prepare surfaces to be finished according to manufacturer's written instructions for each particular substrate condition and as specified.

1. Remove dust, dirt, oil, and grease by washing with a detergent solution; rinse thoroughly with clean water and allow to dry. Remove grade stamps and pencil marks by sanding lightly. Remove loose wood fibers by brushing.
2. Remove mildew by scrubbing with a commercial wash formulated for mildew removal and as recommended by stain manufacturer.

C. Interior Wood Substrates:

1. Scrape and clean knots, and apply coat of knot sealer before applying primer.
2. Apply wood filler paste to open-grain woods, as defined in "MPI Architectural Painting Specification Manual," to produce smooth, glasslike finish.
3. Sand surfaces that will be exposed to view and dust off.
4. After priming, fill holes and imperfections in the finish surfaces with putty or plastic wood filler. Sand smooth when dried.

3.3 APPLICATION

A. Apply finishes according to manufacturer's written instructions and recommendations in "MPI Architectural Painting Specification Manual."

1. Use applicators and techniques suited for finish and substrate indicated.
2. Finish surfaces behind movable equipment and furniture same as similar exposed surfaces.
3. Do not apply finishes over labels of independent testing agencies or equipment name, identification, performance rating, or nomenclature plates.

B. Apply finishes to produce surface films without cloudiness, holidays, lap marks, brush marks, runs, ropiness, or other surface imperfections.

3.4 CLEANING AND PROTECTION

A. At end of each workday, remove rubbish, empty cans, rags, and other discarded materials from Project site.

B. After completing finish application, clean spattered surfaces. Remove spattered materials by washing, scraping, or other methods. Do not scratch or damage adjacent finished surfaces.

C. Protect work of other trades against damage from finish application. Correct damage by cleaning, repairing, replacing, and refinishing, as approved by Architect, and leave in an undamaged condition.

D. At completion of construction activities of other trades, touch up and restore damaged or defaced finished wood surfaces.

3.5 INTERIOR WOOD-FINISH-SYSTEM SCHEDULE

A. Wood substrates, including wood trim, glued-laminated construction, and car decking.

B. Clear, Two-Component Polyurethane System:

1. Prime Coat: Two-component polyurethane matching topcoat.
2. Intermediate Coat: Two-component polyurethane matching topcoat.
3. Topcoat: Varnish, aliphatic polyurethane, two-component, Gloss Level 3, MPI #78.
4. Color: Match wood door stain.

END OF SECTION

SECTION 102600 - WALL AND CORNER PROTECTION

PART 1 GENERAL

1.1 SECTION INCLUDES
- A. Corner guards.
- B. Metal Wall Base
- C. Fiber reinforced plastic sheet.

1.2 SUBMITTALS
- A. Product Data: Provide product criteria, characteristics, accessories, jointing and methods, and termination details for curtains, track and accessories.
- B. Manufacturer's Installation Instructions: Indicate special preparation of substrate, installation and attachment methods, and perimeter conditions requiring special attention.
- C. Maintenance Data: For user's operation and maintenance of system including:
  1. Methods for maintaining system's hardware, operation, materials and finishes.
  2. Precautions about cleaning materials and methods that could be detrimental to components, finishes, and performance.
  3. Recommendations on maintenance schedule.

1.3 QUALITY ASSURANCE
- A. Manufacturer Qualifications: Company specializing in the manufacture of work specified in this section with minimum 5 years of experience.
- B. Installer Qualifications: Company specializing in performing the work of this section with minimum of 5 years of experience.

1.4 DELIVERY, STORAGE, AND HANDLING
- A. As required by the manufacturer for a warrantable installation of the installed products to meet the Performance and Design Criteria.

1.5 WARRANTY
- A. Installation Warranty: Contractor shall correct defective Work within a 2 year period after Date of Substantial Completion; remove and replace materials concealing waterproofing at no extra cost to Owner.

PART 2 PRODUCTS

2.1 DESCRIPTION
- A. Surface applied wall protection including corner guards and fiber reinforced plastic sheet.

2.2 PERFORMANCE AND DESIGN CRITERIA
- A. Surface Burning Characteristics: Flame spread index of 25 or less, smoke developed index of 450 or less, when tested in accordance with ASTM E84.

2.3 MATERIALS
- A. Corner guards.
  1. (CG-1) Corner Guards:
     - a. Basis of Design: Stainless Steel Corner Guard by InPro Corporation.
       1) Substitutions for products by manufacturers other than those listed: See Section 016000 - Product Requirements.
     - b. Material: 430 Stainless steel; 16 gauge (standard).
     - c. Finish: #4 Satin.
     - d. Height: Top of 4 inch base to 4-feet-0-inches length.
     - e. Leg Length: 1-1/2 inch.
     - f. Mounting: Standard screw-on.
  2. (CG-2) End Wall Protectors:
     - a. Basis of Design: Stainless Steel Surface Mount End Wall Protector by InPro Corporation.

1) Substitutions for products by manufacturers other than those listed: See Section 016000 - Product Requirements.
b. Material: 430 Stainless steel; 16 gauge (standard).
c. Finish: #4 Satin.
d. Height: Top of 4-inch base to 4-feet-0-inches length.
e. Leg Length: 1-1/2 inch.
f. Mounting: Standard screw-on.

B. (MTL-1) Metal Wall Base:
1. Manufacturer: Metal Depot.
2. Product: Stainless steel sheet; 304.
3. Finish: #4 brushed finish.
4. Location: See drawings.

C. Sheet Wall Protection.
1. (FRP-1) Fiber Reinforced Plastic Sheet:
a. Basis of Design:
1) Substitutions for products by manufacturers other than those listed: See Section 016000 - Product Requirements.
b. Height: As indicated in drawings.
c. Width: As indicated in drawings.
d. Mounting: Adhesive.
e. Seams: Provide manufacturer's color matched PVC trim components.
f. Caulk: Color matched.
g. Color: Designer White 0101.
h. Texture: Velvet.

D. Trims: Inside "L" corner molding, panel molding and perimeter trim where applicable.

2.4 ACCESSORIES
A. All accessory materials required by the manufacturer for a warrantable installation of the installed products in a manner that meets the Performance and Design Criteria.
B. Large Corner Shower Caddy:
1. Quantity: (1) per shower.
2. Color: To match shower surround.

PART 3 EXECUTION

3.1 EXAMINATION
A. Verify existing conditions meet the manufacturer's requirements before starting work, including location of blocking.

3.2 PREPARATION
A. Prepare surfaces to receive work in accordance with manufacturer's instructions.

3.3 INSTALLATION
A. General: Install all materials in accordance with manufacturer's instructions based on conditions present.
B. Install components plumb, level, square, and in proper alignment with drawings.

3.4 ADJUSTING
A. Repair minor damages to finish in accordance with manufacturer’s instructions and as approved by Architect.

3.5 CLEANING
A. At completion of the installation, clean surfaces in maintenance instructions.

3.6 PROTECTION
A. Protect installed work as required by the manufacturer to maintain product performance, design criteria, and warranty.

END OF SECTION

SECTION 21 00 00 - FIRE SUPPRESSION GENERAL CONDITIONS

PART 1 GENERAL

1.1 GENERAL REQUIREMENTS

A. Conform to General Conditions, Supplementary Conditions, the modifications thereto and Division 1 - General Requirements for all work.

1.2 SUMMARY

A. Design Intent:
1. System to provide coverage for entire building.
2. Revise and extend existing dry sprinkler system for building remodel.
3. Revise location of building main drain and test drain.
4. Reconnect relocated site fire service to base of riser. Relocate riser if necessary.
5. Provide hydraulically designed (or pipe schedule only if acceptable by authorities having jurisdiction) system to NFPA 13 occupancy requirements.
6. Determine volume and pressure of incoming water supply from water flow test data.
7. Interface system with building fire and smoke alarm systems.
8. Piping from the site connection to the flange at the base of the sprinkler riser is specifically included in Division 21 00 00.

B. **This is a design/build specification.** Provide all required design, permits, labor, materials and installation of fire protection work, complete and operable in accordance with these specifications and drawings. Work of Division 21 includes, but is not limited to, that as delineated in conceptual information shown on the drawings and the following specification sections:

21 00 00	Fire Suppression General Conditions
21 05 00	Common Work Results for Fire Suppression
21 13 16	Dry-Pipe Sprinkler Systems

1.3 CODES AND STANDARDS

A. Conform to following code and agency requirements having jurisdictional authority over fire protection installation.
1. International Building Code (IBC) with local amendments.
2. National Electrical Code (NEC) NFPA 70.
3. Requirements of OSHA.
4. National Fire Protection Association (NFPA) Codes and Standards.
5. ASTM, ASME, ANSI and NEMA standards, as referenced in subsequent sections.
6. Local Water District Requirements.
7. Local Health Department Requirements.

1.4 SUBMITTALS

A. See Division 01 - Submittal Procedures.

B. Field Test Reports: Include results of hydrostatic and flow tests with hydraulic calculations.

C. Design Data: Submit design calculations signed and sealed by NICET Level III Certified Designer.

D. Provide one electronic copy of product data submittals for all products listed under “Part 2 Products” of Division 21 and all additional products noted on drawings or required for completion of project.

E. Electronic: **All sections of Division 21 shall be submitted together in one complete PDF file with bookmarks for each section. Multi-part submittals will be returned without review.**
   1. First Page: Name of Project, Owner, Location & Contracting Company.
   2. Index Page: List of specification sections with contents by Tag or item.
   3. Bookmarks: Electronic bookmark of each specification section corresponding to listing in index.

F. Clearly indicate on each page the equipment schedule designation (Tag) and/or specification section, as applicable. Indicate model and all accessories intended for use.

G. Equipment vendor cover page with contact information shall precede submittal by that vendor.

H. Submitted product information shall include (as applicable) but not be limited to the following information:
   1. Product description
   2. Manufacturer and model
   3. Dimensions
   4. Performance Ratings (i.e. capacity, rpm, HP, temperature)
   5. Construction Materials
   6. Ratings (i.e. UL, FM, NEMA, etc)
   7. Electrical data
   8. Vibration Isolation
   9. Controls and wiring diagrams
   10. Accessories
   11. Engineering technical data (i.e. pressure drops, leakage rates, pump curves)

1.5 SHOP DRAWINGS

A. Prepare Shop Drawings stamped and signed by a NICET Class III Certified designer. Develop in accordance with NFPA 13 and the State and Local Fire Marshals. Submit PDF copies of these drawings for approval prior to beginning work.

B. Submit shop drawings to Architect, Local Fire Marshal, and all other approving authorities. Drawings shall be approved by all agencies prior to fabrication or installation. **Drawings submitted for Architect's approval shall have been stamped approved by the Fire Department.**

C. The Contractor shall draw the design team’s attention to any areas in which they contemplate deviations from the conceptual information shown on the contract documents (e.g., due to site conditions).

D. These drawings and diagrams shall show all pipe sizes as well as the manufacturer’s name and catalog number of each piece of equipment used.

E. The Architect's review of such drawings shall not relieve the Contractor of responsibility for deviations from the Contract drawings or specifications, nor shall it relieve him from responsibility for errors or omission in such drawings.

F. Fire Sprinkler shop drawings shall indicate all relevant pipe, ceiling, and structural elevations and clearances. All elbows, offsets, and turns shall be clearly identified. All required access doors shall be shown. By submission of sheet fire sprinkler shop drawings, the Contractor acknowledges that coordination has been done to ensure that all ductwork and piping fits and no conflicts exist.

G. Indicate layout of piping and sprinkler locations coordinated with ceiling type, lighting, structural and mechanical. Conform to symmetrical spacing of heads and integrate into locations of lights and other ceiling devices. Center heads on ceiling tiles (+/- 1") and align in straight rows.

H. Indicate detailed pipe layout, hangers and supports, sprinklers, components and accessories. Include building sections and a plot plan showing location of underground supply connections, outside control valves, fire department connections and other equipment to be used.

I. Indicate pipe materials used, jointing methods, supports, floor and wall penetration seals. Indicate installation layout, mounting and support details, and piping connections.

J. Indicate layout of flexible connectors, expansion joints, expansion compensators, loops, offsets and swing joints.

K. Indicate inertia bases and locate vibration isolators, with static and dynamic load on each.

L. Indicate layout of finished ceiling areas indicating sprinkler locations coordinated with ceiling installation.

M. Indicate system controls.

1.6 FIRE SPRINKLER PERMIT

A. Fire Sprinkler contractor shall prepare all documents for permit application, submit and obtain the permit from reviewing authority. All costs and fees to obtain the permit shall be paid by the Fire Sprinkler Contractor.

1.7 QUALITY ASSURANCE

A. Perform work in accordance with NFPA 13 and Local and/ or State Fire Marshal.

B. Perform work in accordance with ASME B31.9 code for installation of piping systems and ASME Section IX for welding materials and procedures.

1.8 QUALIFICATIONS

A. Manufacturer: Company specializing in manufacturing products specified in this section with minimum three years of continuous representation, a stocking distributor and service representative in the State of Washington.

B. Contractor: Licensed and regularly engaged in the specialized design and installation of automatic sprinkler equipment as listed by UL or other nationally recognized testing laboratories. Minimum three years' experience and have installed at least five systems of comparable size.

C. Bids by wholesalers, suppliers or any firm whose principal business is not that of manufacturing and/or installing fire protection systems are not acceptable.

1.9 DELIVERY, STORAGE, AND HANDLING

A. Deliver and store valves in shipping containers, with labeling in place.

B. Furnish cast iron and steel valves with temporary protective coating with end caps and closures on piping and fittings. Maintain in place until installation.

C. Accept expansion joints on site in factory packing with shipping bars and positioning devices intact. Inspect for damage.

1.10 FIELD MEASUREMENTS

A. Where the word ‘verify’ is used on the documents, the contractor shall field verify the existing conditions and modify the scope of the installation as required to meet the verified conditions without additional cost to the Owner.

B. Existing systems and utility lines indicated on drawings are in accordance with information furnished to the Architect and may not be complete. Contractor is responsible for locating, uncovering, disposing of or maintaining existing systems.

1.11 COORDINATION

A. Visit the site and become familiar with existing conditions affecting work.

B. Verify locations of any overhead or buried utilities on or near site. Determine such locations in conjunction with all public and private utility companies and with all authorities having jurisdiction.

C. Mechanical drawings are diagrammatic and do not indicate all possible site conditions. The contractor shall verify all measurements, dimensions and connections on site and coordinate between trades to preclude interferences. The contractor shall provide adjustments to piping as necessary to fit conditions including but is not limited to relocation, offsets, and transitions.

D. In the event of a conflict with other trades of work, the following priority from highest to lowest shall be followed: Structural, lighting, HVAC, plumbing/piping and sprinklers. Starting with the lowest priority, the HVAC, plumbing, and sprinkler contractors shall provide whatever materials, offsets, labor etc. is required to resolve the conflict.

E. When discrepancies occur between plans and specifications, the Architect will determine which takes precedence and the Contractor shall perform the selected requirement at no additional cost.

F. Prior to ordering equipment cross-check mechanical and electrical drawings and specifications to assure proper location and electrical characteristics of connections serving mechanical and electrical equipment.

G. Advise the Architect of any modifications required to suit equipment furnished. Costs for modifications due to equipment substitution will be borne by the contractor.

H. Wherever conflicts occur between different parts of the Contract Documents the greater quantity, the better quality, or larger size shall prevail unless the Architect informs the Contractor otherwise in writing.

I. The scale of each drawing is relatively accurate, but the Contractor is warned to obtain the necessary dimensions for any exact takeoffs from the Architect. No additional cost to the Owner will be considered for failure to obtain exact dimensions where not clear or in error on the drawings. Any device of fixture roughed in improperly and not positioned on implied centerlines or as required by good practice must be repositioned at no cost to the Owner.

1.12 CUTTING, FITTING, REPAIRING AND PATCHING

A. Arrange and pay for all cutting, fitting, repairing, patching and finishing of work by other trades where necessary for installation of mechanical work. Perform work only with craftsmen skilled in their respective trades.

B. Avoid cutting, where possible, by setting sleeves, frames, etc., and by coordinating for openings in advance. Assist other trades in securing correct location and placement of rough-frames, sleeves, openings, etc. for ducts and piping.

C. Cut all holes neatly and as small as possible to admit work. Perform cutting in manner so as not to weaken walls, partitions or floors. Drill holes required to be cut in floors without breaking out around holes.

1.13 SALVAGE

A. Remove excess piping and plug or cap any unused branch connections. Remove scrap pipe and all other excess materials from the site.

B. Comply with contractor’s Construction Waste Management Plan.

1.14 EXTRA MATERIALS

A. Provide extra sprinklers under provisions of NFPA 13.

B. Furnish suitable wrenches for each sprinkler type.

C. Furnish metal storage cabinet adjacent to alarm valve. Lettered "Automatic Sprinklers - Reserve Supplies."

1.15 FINAL APPROVAL

A. Completion and approval of the following is required for final approval of systems.
1. Execution of Architect's and Engineer’s final observation reports
2. Operation and maintenance instruction
3. Operation and maintenance manuals submitted
4. Equipment cleaning
5. Record drawings submitted

B. See Division 01.

1.16 OPERATING AND MAINTENANCE INSTRUCTIONS

A. General: In addition to requirements of Division 01, following initial operation of mechanical systems and prior to acceptance by the Architect, perform the following services.

B. At least two weeks prior to each instruction period, give written notification of readiness to proceed to the Architect and Owner, and obtain mutually acceptable dates.

C. Conduct demonstrations and instructions for the Owner's representatives, pointing out requirements for operating, servicing and maintaining equipment and systems. Describe general system operation and specific equipment functions. Cover all equipment calibration, setpoint adjustment, safeties and alarms.

D. Furnish qualifications of Contractor's personnel in charge of the instruction; foreman position is minimum acceptable. Where equipment startup is performed by supplier's or manufacturer's personnel, those personnel should also provide training on that equipment.

E. During demonstrations and instructions include and reference information from maintenance manuals and contract drawings.
   1. Provide documentation of all instruction which includes:
      a. Date and time of instruction
      b. Name, affiliation and qualifications of the instructor
      c. Name and affiliation of the attendees
      d. Topics, systems, and equipment covered
      e. Length of instruction

F. Minimum duration of instruction period is 1 hours.

1.17 OPERATING AND MAINTENANCE MANUALS

A. Contents: Furnish, in accord with Division 1, one PDF and one bound copy of operating and maintenance manuals to include the following:
   1. Manufacturers, suppliers, contractor names, addresses and phone numbers.
   2. Warranty service contractors' names, address and phone numbers (if different from above).
   3. Schedule and description of routine maintenance for each component to include oiling, lubrication and greasing data.
   4. Test data log.
   5. Manufacturer's cuts and rating tables, including brochures for all submittal items.
   6. Part numbers of all replaceable items.
   7. Control diagrams and operation sequence.
   8. Written guarantees.
   9. Record drawings corrected and completed.
   10. Completed equipment start-up forms and checklists.

B. Binders:
   1. Furnish typewritten or printed index and tabbed dividers between principal categories.
   2. Bind each manual in a hard-backed loose-leaf binder.

C. Imprint on cover:
   1. Name of project.
   2. Owner.
   3. Location of project.
   4. Architect.
   5. Contractor.
   6. Year of completion.

D. Imprint on backing:
   1. Name of project.
   2. Year of completion.

E. Submittals:
   1. Preliminary Copies: Prior to scheduled completion of the project, provide one PDF copy for review by the Architect.
   2. Final Copies: After approval of the preliminary copy, submit one PDF and one bound copy to the Owner.

1.18 EQUIPMENT AND PIPE CLEANING

A. Clean interior and exterior of all equipment. Equipment shall be free of dirt, construction debris, corrosion, etc.

B. Adequate provisions shall be made during construction to eliminate dirt, debris or other material from entering and collecting inside of pipe. Any collection of material shall be thoroughly cleaned before equipment startup and if necessary before owner occupancy.

C. Clean exterior of all exposed pipe.

D. Flush entire piping system of foreign matter.

1.19 RECORD DRAWINGS

A. See Division 1.

B. Submit two digital files with all drawings in PDF and AutoCAD format.

C. Show location of equipment and size of piping. Where appropriate provide tag or label identification for all valves and similar equipment. Indicate locations and elevations of exterior pipe and utility connections. Maintain continuously updated drawings during progress of project.

1.20 TESTING

A. Provide completed start-up forms and checklists.

1.21 WARRANTIES AND CONTRACTOR'S GUARANTEE

A. Furnish one year warranty from date of substantial completion for all systems unless specifically noted otherwise.

B. All work, material and equipment shall be free of defect, complete and in perfect operating order at time of delivery to Owner.

C. Without cost to Owner, **correct all defects and failures discovered within one year from date of final acceptance**, except when in the opinion of the Architect such condition is due to neglect or carelessness of the Owner.

D. The guarantee of the Contractor is independent of shorter time limits by any manufacturer of equipment he has furnished. Submit with Operation and Maintenance Manual all guarantees which exceed one year.

E. Make all necessary adjustments during first year of operation.

F. The presence of any inspector or observer during any construction does not relieve the Contractor from responsibility for defects discovered after completion of the work.

PART 2 NOT USED

PART 3 EXECUTION

3.1 DOCUMENTATION

A. Additional plan submittals to Local Fire Marshal: If additional drawing submittals are required at any time during construction contractor shall prepare and submit drawings, review with Fire Marshal, and pick up subsequent approved drawings.

3.2 INSPECTION

A. Do not allow any work to be covered up or enclosed until inspected, tested and approved by the Architect and all authorities having jurisdiction over the work.

B. Should any work be enclosed or covered up before such inspection and test, Contractor shall at his own expense uncover work, and after it has been inspected, tested and approved, make all repairs as necessary to restore all work disturbed by him to its original condition.

3.3 INTERFACE WITH OTHER PRODUCTS

A. Verify devices are installed and connected to fire alarm system.

END OF SECTION

SECTION 21 05 00 - COMMON WORK RESULTS FOR FIRE SUPPRESSION

PART 1 GENERAL

1.1 SUMMARY

A. Section Includes:
1. Pipe
2. Valves
3. Hangers and Support
4. Expansion Fittings and Loops
5. Seismic Controls
6. Identification

1.2 EXPANSION AND SEISMIC DESIGN REQUIREMENTS

A. Provide structural work and equipment required for expansion and contraction of piping. Verify anchors, guides, and expansion joints provide and adequately protect system.

B. Expansion Compensation Design Criteria:
1. Installation Temperature: 50 degrees F.
2. Fire Protection System Temperature: 90 degrees F.
3. Safety Factor: 30 percent.

C. Seismic performance: Provide seismic restraint in compliance with local jurisdiction and IBC 1613 requirements.

1.3 QUALITY ASSURANCE

A. Through penetration firestopping of fire rated assemblies: ASTM E814 with 0.10” w.g. minimum positive pressure differential. Minimum 1-hour protection.

B. Installed products shall have surface Burning Characteristics: 25/50 flame spread/smoke developed index when tested in accordance with ASTM E84.

C. Perform work in accordance with local jurisdiction’s requirements and AWS D1.1 for welding hanger and support attachments to building structure.

D. Conform to ASME A13.1 for color scheme for identification of piping systems and accessories.

PART 2 PRODUCTS

2.1 BURIED PIPING

A. Note that piping from the combination meter to the RPBP must be in piping suitable for domestic water (i.e., stainless steel).

B. Steel Pipe: ASTM A53 Grade B, ASTM A135, ASTM A795 Schedule 40 black.
1. Steel Fittings: ASME B16.9, wrought steel, butt welded; ASTM A234, wrought carbon steel and alloy steel; with half-lapped 10 mil polyethylene tape.
2. Cast Iron Fittings: ASME B16.1 flanges and flanged fittings.
3. Joints: AWS D1.1, welded.

4. Protection: ASME C105 polyethylene jacket with heat shrink sleeves or double layer, half-lapped 10 mil polyethylene tape to 6" above grade.

C. Copper Tubing: Type K annealed. ASTM B75, ASTM B88, ASTM B251.
1. Fittings: Cast copper alloy ASME B16.18; wrought copper and bronze, ASME B16.22. Pressure type solder joint.
2. Joints: Silver braze, AWS A5.8 Classification BCuP-3 or BCuP-4; Solder, ASTM B32 Grade 95TA.
3. Protection: ASME C105 polyethylene jacket with heat shrink sleeves or double layer, half-lapped 10 mil polyethylene tape to 6" above grade.

2.2 ABOVE GROUND PIPING

A. Note that piping from the combination meter to the RPBP must be in piping suitable for domestic water (i.e., stainless steel).

B. Steel Pipe: ASTM A53 Grade B, ASTM A135, ASTM A795 Schedule 40 black; Schedule 10 UL listed light wall; ASTM A-795 Type E, Grade A Eddy-Flow or Dyna-Flow UL listed thin wall flow pipe.
1. Steel Fittings: ASME 16.9, wrought steel, butt welded; ASME B16.25, butt weld; ASTM A234, wrought carbon steel and alloy steel; ASME B16.5, steel flanges and fittings; ASME B16.11, forged steel socket welded and threaded.
2. Cast Iron Fittings: ASME B16.1 flanges and flanged fittings; ASME B16.4, threaded fittings.
3. Malleable Iron Fittings: ASME B16.3, threaded.
4. Ductile Iron Fittings: ASTM A536, Grade 65-45-12. In applicable sizes, fittings shall be short pattern, with flow equal to standard pattern fittings. Basis of Design: Victaulic FireLock.
5. Mechanical Grooved Couplings: Ductile iron housing clamps to engage and lock, "C" shaped elastomeric sealing gasket, steel bolts, nuts, and washers. ASTM A449. Victaulic, Gruvlok or approved equal.
   a. Rigid Type: Housings cast with offsetting, angle-pattern, bolt pads to provide system rigidity and support and hanging in accordance with NFPA-13, fully installed at visual pad-to-pad offset contact. (Couplings that require exact gapping at specific torque ratings are not permitted.). Basis of Design: Victaulic Style 009N and 107N.
   b. Flexible Type: For use in locations where vibration attenuation and stress relief are required: Basis of Design: Victaulic Style 177 or Style 77.
6. Installation-Ready™ fittings for Schedule 40/10 grooved end steel piping in fire protection applications sizes 1-¼ thru 2½ inches. Ductile iron housing conforming to ASTM A-536, Grade 65-45-12, with Installation-Ready™ ends, pre-lubricated Grade “E” EPDM Type ‘A’ gasket, and ASTM A449 electroplated steel bolts and nuts. UL listed for a working pressure of 300 psi and FM approved for working pressure 365 psi.

C. Steel Pipe: ASTM A135 Grade A, UL threadable thin wall, black.
1. Cast Iron Fittings: ASME B16.4, threaded fittings.
2. Malleable Iron Fittings: ASME B16.3 threaded type.

2.3 VALVES

A. Manufacturers: UL & FM approved by Nibco, Stockham, Milwaukee or approved equal.

B. Gate Valves:

1. Over 2 inches: Iron body, bronze trim, rising stem pre-grooved for mounting tamper switch, hand wheel, OS&Y, solid bronze or cast iron wedge, flanged or grooved ends. Basis of Design: Victaulic Series 771.
2. Over 2 inches: Iron body, bronze trim, non-rising stem with bolted bonnet, solid bronze wedge, flanged or grooved ends. Basis of Design: Victaulic Series 772, for use with Series 773 (wall) or 774 (upright) post.

C. Ball Valves:
1. Up to and including 2 inches: Bronze two piece body, brass, chrome plated bronze, or stainless steel ball, teflon seats and stuffing box ring, lever handle, threaded or sweat fitting ends.
2. Supervised valves provided with weatherproof actuator housing, handwheel, and supervisory switches. Basis of Design: Victaulic Series 728.

D. Butterfly Valves:
1. Bronze Body: Stainless steel disc, resilient replaceable seat, threaded or grooved ends, extended neck, hand wheel and gear drive and integral indicating device, and built-in tamper proof switch where required.
2. Cast or Ductile Iron Body: Cast or ductile iron, chrome or nickel plated ductile iron or aluminum bronze disc, resilient replaceable pressure-responsive EPDM seat, stainless steel stem (offset from the disc centerline to provide complete 360-degree circumferential seating), wafer, lug, or grooved ends. With extended neck, weatherproof actuator housing with hand wheel and gear drive and integral indicating device where required. Basis of Design: Victaulic Series 705.

E. Check Valves:
1. Up to 2 inches: Bronze body and swing disc, rubber seat, threaded ends.
2. 2 to 4 inches: Iron body, bronze trim, swing check with rubber disc, renewable disc and seat, grooved or flanged ends.
3. 2 inches and over: Ductile iron body, stainless steel or bronze disc with resilient seal, or elastomer coated ductile iron disc with welded-in nickel seat. Stainless steel spring. Wafer, grooved or flanged ends. Basis of Design: Victaulic Series 717.

F. Drain Valves:
1. Compression Stop: Bronze with hose thread nipple and cap.
2. Ball Valve: Brass with cap and chain, 3/4 inch hose thread.

2.4 BACKFLOW ASSEMBLY

A. Double check valve, detector check or as jurisdiction requires. FDA approved epoxy coated cast iron check valve bodies with bronze seats. Furnish with bronze body ball valve test cocks. Suitable for supply pressures to 175 psi and water temperatures to 140 degrees. Tamper switches on gate valves for monitoring. Ames, Watts, Apollo, FEBCO, Wilkins or approved.

2.5 PIPE HANGERS AND SUPPORTS

A. Conform to NFPA 13.

B. Hangers for Pipe Sizes 1 to 6 inch: Carbon steel, adjustable swivel, band hanger. Tolco Fig 200 or equal.

C. Multiple or Trapeze Hangers: Steel channels with welded spacers and hanger rods.

D. Wall Support for Pipe Sizes to 3 inches: Cast iron hook.

E. Wall Support for Pipe Sizes 4 inches and Over: Welded steel bracket and wrought steel clamp.

F. Vertical Support: Steel riser clamp.

G. Floor Support: Cast iron pipe saddle, lock nut, nipple, floor flange, and concrete pier or steel support.

2.6 FLEXIBLE PIPE CONNECTORS

A. Manufacturers: Metraflex, Mason or approved equal.

B. Steel Piping:
1. UL Listed
2. Inner Hose: Stainless Steel.
3. Exterior Sleeve: Braided stainless steel.
4. Joint: Flanged, threaded with union or welded, as specified for pipe joints.
5. Maximum offset: 3/4 inch.

2.7 FLEXIBLE SPRINKLER HOSE CONNECTIONS

A. Manufacturers: Vic-Flex, FlexHead or approved equal.

B. The drop system shall consist of a braided type 304 stainless steel flexible tube, zinc plated steel Male threaded nipple or Victaulic FireLock IGS Groove Style 108 coupling for connection to branch-line piping, and a zinc plated steel reducer with a female thread for connection to the sprinkler head.

C. Performance:
1. FM Approved for its intended use pursuant to FM 1637 Approval Standard for Flexible Sprinkler Hose with Threaded End Fittings.
2. UL Listed for its intended use pursuant to UL 2443 Standard for Flexible Sprinkler Hose with Fittings for Fire Protection Service.
3. Seismically qualified for use pursuant to ICC-ES AC-156 Acceptance Criteria for Seismic Qualification by Shake-Table Testing of Nonstructural Components and Systems.

D. Flexible Hose Assemblies and End Fittings:
1. 100% Type 304 Stainless Steel.
2. Straight Hose Assembly or Elbow Hose Assembly.
3. ½ inch or ¾ inch outlet.
4. 175 psi / 300 psi maximum rated pressure.
5. Fully welded non-mechanical fittings, braided, leak-tested with minimum 1 inch true-bore internal corrugated hose diameter.
6. Union joints shall be provided for ease of installation.

E. Ceiling Bracket:
1. Type G90 Galvanized Steel.
2. The bracket shall allow installation before the ceiling tile is in place.
3. Direct attachment type, having integrated snap-on clip ends positively attached to the ceiling using tamper-resistant screws.
4. Flexible Hose Attachment: Removable hub type with set screw.

2.8 FIRESTOPPING-APPLIED

A. Manufacturers: RectorSeal, Dow Corning, 3M Fire Protection or approved equal.

B. General:
1. Fire stopping materials shall conform to Flame (F) and Temperature (T) ratings as required by applicable building codes and tested by nationally accepted test agencies per ASTM E 814 or UL 1479 fire tests for through penetrations, and ASTM E 1966 or UL 2079 for construction joints, and UL 2307 for perimeter edge joints.
2. Fire stopping material shall be free of asbestos, PCBs, ethylene glycol, and lead.
3. Do not use any product containing solvents or that requires hazardous waste disposal.
4. Fire stopping shall be performed by a contractor trained or approved by firestop manufacturer.
5. Select products with rating not less than rating of wall or floor being penetrated.

C. Single Source Responsibility: Provide firestop systems for all conditions from a single supplier.

D. Product Description: Provide Latex caulk/sealant, Silicone caulk/sealant, Intumescent Wrap Strip, Firestop Putty, Firestop Collar or Intumescent Sleeve to meet each specific application and performance requirement.

E. Primer: Type recommended by firestopping manufacturer for specific substrate surfaces and suitable for required fire ratings.

F. Installation Accessories: Provide clips, collars, fasteners, temporary stops or dams, and other devices required to position and retain materials in place.
1. Forming/Damming Materials: Mineral fiberboard, backer rod or other type recommended by Manufacturer’s tested system.

2.9 MECHANICAL SLEEVE SEALS

A. Manufacturers: Metraflex Metraseal, Thunderline Link-Seal or approved equal.

B. Product Description: Modular mechanical type, consisting of interlocking synthetic rubber links shaped to continuously fill annular space between object and sleeve, connected with bolts and pressure plates causing rubber sealing elements to expand when tightened, providing watertight seal and electrical insulation.

2.10 PIPING ACCESSORIES

A. Manufacturers: Grinnell, EMCO Wheaton, OPW or approved equal.

B. Pipe Alignment Guides: Two piece welded steel with enamel paint, bolted, with spider to fit standard pipe, frame with four mounting holes, clearance for minimum 1 inch thick insulation, minimum 3 inch travel.

C. Swivel Joints: Fabricated steel, bronze, ductile Iron or cast steel body, double ball bearing race, field lubricated, with rubber or Buna-N o-ring seals.

2.11 PIPE MARKERS

A. Color and Lettering shall conform to ASME A13.1.

B. Fire service piping labels shall be red background with white lettering. Legend shall indicate service of pipe.

C. Plastic Pipe Markers: Factory fabricated, flexible, semi-rigid plastic, preformed to fit around pipe or pipe covering. Larger sizes may have maximum sheet size with spring fastener.

D. Plastic Tape Pipe Markers: Flexible, vinyl film tape with pressure sensitive adhesive backing and printed markings.

PART 3 EXECUTION

3.1 PREPARATION - PIPING

A. Ream pipe and tube ends. Remove burrs. Bevel plain end ferrous pipe.

B. Remove scale and foreign material, from inside and outside, before assembly.

C. Prepare piping connections to equipment with flanges, unions or grooved couplings.

3.2 INSTALLATION - PIPING

A. Install piping in accordance with NFPA 13 for sprinkler systems.

B. Route piping in orderly manner, plumb and parallel to building structure. Maintain gradient.

C. Install piping to conserve building space, to not interfere with use of space and other work.

D. Group piping whenever practical at common elevations.

E. Install pipe sleeve at piping penetrations through footings, partitions, walls, and floors. Seal pipe and sleeve penetrations to maintain fire resistance equivalent to fire separation.

F. Install piping to allow for expansion and contraction without stressing pipe, joints, or connected equipment.

G. Pipe Hangers and Supports:
1. Install in accordance with NFPA 13.
2. Install hangers with minimum 1/2 inch space between finished covering and adjacent work.
3. Place hangers within 12 inches of each horizontal elbow.
4. Use hangers with 1-1/2 inch minimum vertical adjustment. Design hangers for pipe movement without disengagement of supported pipe.
5. Support vertical piping at every floor. Support riser piping independently of connected horizontal piping.
6. Where installing several pipes in parallel and at same elevation, provide multiple or trapeze hangers.
7. Install copper plated hangers and supports for copper piping.
8. Prime coat exposed steel hangers and supports. Hangers and supports located in crawl spaces, pipe shafts, and suspended ceiling spaces are not considered exposed.

H. Slope piping and arrange systems to drain at low points.

I. Prepare pipe, fittings, supports, and accessories for finish painting. Where pipe support members are welded to structural building framing, scrape, brush clean, and apply one coat of zinc rich primer to welding.

J. Do not penetrate building structural members unless indicated.

K. Where more than one piping system material is specified, install compatible system components and joints. Install flanges, union, and couplings at locations requiring servicing.

L. Die cut threaded joints with full cut standard taper pipe threads with red lead and linseed oil or other non-toxic joint compound applied to male threads only.

M. Install valves with stems upright or horizontal, not inverted. Remove protective coatings after installation.

N. Install gate, ball, or butterfly valves for shut-off or isolating service.

O. Install drain valves at main shut-off valves, low points of piping and apparatus.

3.3 INSTALLATION – SEISMIC CONTROLS

A. Provide seismic restraints and hangers in compliance with NFPA 13.

B. Seismic Bracing: Follow NFPA 13 and the following.
1. Bracing shall be bidder designed to resist seismic loading.
2. Provide seismic calculations as required for Ip = 1.5.

3.4 INSTALLATION – FIRESTOPPING AND SEALS AT PARTITIONS

A. Install material at fire rated construction perimeters and openings containing penetrating sleeves, piping and other items requiring firestopping.

B. Apply primer where recommended by manufacturer for type of firestopping material and substrate involved, and as required for compliance with required fire ratings. Primers must comply with VOC limits per Green Seal standards GS-03 (1997), GS-11 (1993), or SCAQMD Rule #1113 (2004).

C. Place intumescent coating in sufficient coats to achieve rating required.

D. Clean adjacent surfaces of firestopping materials.

E. Fire Rated Surface:
1. Seal opening at floor, wall, partition, ceiling, and/or roof as follows:
a. Install sleeve through opening and extending beyond minimum of 1 inch on both sides of building element.
b. Size sleeve allowing minimum of 1 inch void between sleeve and building element.
c. Pack void with backing material.
d. Seal ends of sleeve with UL listed fire resistive silicone compound to meet fire rating of structure penetrated.

F. Non-Rated Surfaces:
1. Seal opening through non-fire rated wall, partition, floor, ceiling, and/or roof opening as follows:

a. Install sleeve through opening and extending beyond minimum of 1 inch on both sides of building element.
b. Size sleeve allowing minimum of 1 inch void between sleeve and building element.

2. Install escutcheons where piping penetrates non-fire rated surfaces in occupied spaces.
3. Exterior wall openings below grade: Assemble rubber links of mechanical sealing device to size of piping and tighten in place, in accordance with manufacturer's instructions.
4. Interior partitions: Seal pipe penetrations air tight. Apply sealant to both sides of penetration to completely fill annular space between sleeve and conduit.

3.5 INSTALLATION - IDENTIFICATION

A. Identification is not required on sprinkler branch lines and run-outs to heads.

B. Identification is required on:
1. Bulk mains
2. Incoming fire service
3. FDC piping
4. Standpipe (not in stairwell)

C. Identify service and flow direction (and pressure where more than one pressure is used). Install in clear view and align with axis of piping. Locate identification not to exceed 20 feet on straight runs including risers and drops, adjacent to each valve and tee, at each side of penetration of structure or enclosure, and at each obstruction. Install a minimum of one label for each story traversed by piping.

D. Install plastic nameplates with corrosive-resistant mechanical fasteners, or adhesive.

E. Install labels with sufficient adhesive for permanent adhesion.

3.6 INTERFACE WITH OTHER PRODUCTS

A. Inserts:
1. Install inserts for placement in concrete forms.
2. Install inserts for suspending hangers from reinforced concrete slabs and sides of reinforced concrete beams.
3. Install hooked rod to concrete reinforcement section for inserts carrying pipe over 4 inches.
4. Where concrete slabs form finished ceiling, locate inserts flush with slab surface.

3.7 MANUFACTURER'S FIELD SERVICES

A. Furnish inspection services by flexible pipe manufacturer's representative for final installation and certify installation is in accordance with manufacturer's recommendations and connectors are performing satisfactorily.

END OF SECTION

SECTION 21 13 16 - DRY-PIPE SPRINKLER SYSTEMS

PART 1 GENERAL

1.1 SUMMARY

A. Section includes dry-pipe sprinkler system design, installation, and certification.

1.2 SYSTEM DESCRIPTION

A. This section requires design and installation of dry pipe sprinkler systems for building fire protection.

B. Perform work in accordance with NFPA 13, state and local municipality having jurisdiction.

C. Determine volume and pressure of incoming water supply from water flow test data. Revise design when test data become available prior to submittals.

D. Interface system with building fire and smoke alarm system.

E. Fire suppression system shall not contain ozone depleting substances such as halons, CFC's and HCFC's.

1.3 QUALITY ASSURANCE

A. Perform work in accordance with NFPA 13, state and local municipality having jurisdiction.

PART 2 PRODUCTS

2.1 SPRINKLERS

A. Manufacturers: Tyco, Reliable, Viking or approved equal.

B. Provide "quick response" heads in all residential occupancies.

C. Provide "quick response" heads in all light hazard occupancies.

D. Suspended T-bar Ceiling Type:
1. Type: Semi-recessed pendant type with matching escutcheon plate.
2. Sprinkler and escutcheon plate finish: Chrome plated factory finish.
3. Fusible Link: Glass bulb type temperature rated for specific area hazard.

E. GWB Ceiling Type:
1. Type: Semi-recessed pendant type with matching escutcheon plate.
2. Sprinkler and escutcheon plate finish: Chrome plated factory finish.
3. Fusible Link: Glass bulb type temperature rated for specific area hazard.

F. Exposed Area Type:
1. Type: Standard upright type.
2. Finish: Brass
3. Fusible Link: Glass bulb type temperature rated for specific area hazard.

G. Side wall Type:
   1. Type: Standard \ Semi-recessed horizontal side wall type with matching escutcheon plate.
   2. Sprinkler and escutcheon plate finish: Brass \ Chrome plated finish.
   3. Fusible Link: Glass bulb type temperature rated for specific area hazard.

H. Guards: Finish matching sprinkler finish.

2.2 PIPING SPECIALTIES

A. Dry Pipe Sprinkler Alarm Valve: Existing.

B. Electric Alarm: Electrically operated chrome plated gong with pressure alarm switch.

C. Pressure Switch: Two contacts; rated 10 amp at 125 volt AC and 2.5 amp at 24 volt DC.

2.3 AIR COMPRESSOR

A. Existing

2.4 ELECTRICAL CHARACTERISTICS AND COMPONENTS

A. Controls: Supervisory switches, Water Level Supervisory Switches, Tank Temperature Supervisory Switches, Room Temperature Supervisory Switches.

B. Disconnect Switch: Factory mount in control panel \ on equipment.

PART 3 EXECUTION

3.1 INSTALLATION

A. Install in accordance with NFPA 13.

B. Install outside alarm on exterior building wall.

C. Install piping to minimize obstruction with other work.

D. It shall be a specific requirement that insofar as possible, all sprinkler system mains and branches shall be installed as close as possible to the structural members, not the ceiling.

E. Install main piping in concealed spaces above finished ceilings or soffits; branch piping in joist space or other concealed space to sprinkler heads.

F. Center sprinklers in two directions in ceiling tile and install piping offsets.

G. Install guards on sprinklers exposed to potential damage.

H. Provide drains at system low points.

I. Hydrostatically test entire system.

J. Test must be witnessed by Authority having jurisdiction.

3.2 CLEANING

A. Flush entire piping system of foreign matter.

3.3 PROTECTION OF INSTALLED CONSTRUCTION

A. Apply masking tape or paper cover to protect concealed sprinklers, cover plates, and sprinkler escutcheons not receiving field paint finish. Remove after painting. Replace painted sprinklers with new.

END OF SECTION

SECTION 22 00 00 - PLUMBING GENERAL CONDITIONS

PART 1 GENERAL

1.1 GENERAL REQUIREMENTS

A. Conform to General Conditions, Supplementary Conditions, the modifications thereto and Division 01 - General Requirements for all work in Division 22.

1.2 SUMMARY

A. Provide labor, materials and appliances necessary for satisfactory installation of mechanical work ready to operate in strict accordance with these specifications and drawings. Work of Division 22 includes, but is not limited to, that as delineated in the following specification sections:

22 00 00	Plumbing General Conditions
22 05 00	Common Work Results for Plumbing
22 07 00	Plumbing Insulation
22 11 00	Facility Water Distribution
22 13 00	Facility Sanitary Sewerage
22 26 00	Liquid Petroleum Gas Systems
22 40 00	Plumbing Fixtures

B. TEST AND BALANCE: Provided by 23 05 93. Provide all necessary coordination, assistance and documentation.

C. Related Sections:
016000 Product Requirements
017419 Construction Waste Management

1.3 CODES AND STANDARDS

A. Conform to following code and agency requirements having jurisdictional authority over mechanical installations.
1. Uniform Plumbing Code (UPC) with local amendments.
2. International Mechanical Code (IMC) with local amendments.
3. International Building Code (IBC) with local amendments.
4. International Fuel Gas Code (IFGC) with local amendments.
5. National Electrical Code (NEC) NFPA 70.
6. Requirements of OSHA and EPA.
7. National Fire Protection Association (NFPA) Codes and Standards.
8. ASME code for construction of pressure vessels.
9. American Gas Association (AGA) Standards.
10. ASTM, ANSI and NEMA standards, as referenced in subsequent sections.
11. Local Sewer District Requirements.
12. Local Water District Requirements.
13. Local Health Department Requirements.

14. Washington State Energy Code.

1.4 PERFORMANCE REQUIREMENTS

A. Firestopping: Conform to International Building Code with local amendments, FM and UL for fire resistance ratings and surface burning characteristics.

1.5 PRODUCT SUBSTITUTIONS:

A. Manufacturers and models of equipment and material indicated herein and on drawings are those upon which mechanical design is based. Other manufacturers with products considered equal in general quality may be listed without specific model designation. Manufacturers not listed must be submitted for approval.

B. Substitutions will be evaluated based on product manufacturer only. Specific product model, specifications, options and accessories will be evaluated during submittals. Approval of a manufacturer substitution does not constitute approval of the submitted product.

C. Any equipment other than the basis of design is considered a substitution.

D. In selecting substitute equipment, the Contractor is responsible for and must guarantee equal performance and fit. Cost of redesign and all additional costs incurred to accommodate the substituted equipment shall be borne by the Contractor.

E. Unless indicated otherwise, "or approved" may be assumed for all products in Division 22.

1.6 SUBMITTALS

A. Provide one electronic copy of product data submittals for all products listed under “Part 2 Products” of Division 22 and all additional products noted on drawings or required for completion of sequence of operations.

B. Electronic: **All sections of Division 22 shall be submitted together in one complete PDF file with bookmarks for each section. Multi-part submittals will be returned without review.**
   1. First Page: Name of Project, Owner, Location & Contracting Company.
   2. Index Page: List of specification sections with contents by Tag or item.
   3. Bookmarks: Electronic bookmark of each specification section corresponding to listing in index.

C. Clearly indicate on each page the equipment schedule designation (Tag) and/or specification section, as applicable. Indicate selected model and all accessories intended for use.

D. Equipment vendor cover page with contact information shall precede submittal by that vendor.

E. Submitted product information shall include (as applicable) but not be limited to the following information:
   1. Product description
   2. Manufacturer and model
   3. Dimensions
   4. Performance Ratings (i.e. capacity, rpm, HP, temperature)
   5. Construction Materials

6. Ratings (i.e. UL, ASTM, NEMA, etc)
7. Electrical data
8. Sound level data (corresponding to scheduled values)
9. Vibration Isolation
10. Controls and wiring diagrams
11. Accessories
12. Engineering technical data (i.e. pressure drops, leakage rates, pump curves)

F. If requested by Architect or Engineer, submit Manufacturer's Installation Instructions on any equipment, procedures, or certifications so requested.

G. Do no ordering, fabrication or manufacturing of products until return of approved submittals.

1.7 SHOP DRAWINGS

A. The Contractor shall also submit drawings and/or diagrams for review and for job coordination in all cases where deviation from the Contract Drawings are contemplated because of job conditions, interference or substitution of equipment, or when requested by the Engineer for purposes of clarification of the Contractor's intent. Also submit detailed drawings, rough-in sheets, etc., for all special or custom-built items or equipment. Drawings and details under the section shall include (but not be limited to) the following, where applicable to this project:
1. Electrical interlock wiring diagrams.
2. Piping layout plans and interference details.
3. Custom sink layout.

B. By submission of plumbing shop drawings, the Contractor acknowledges that coordination has been done to ensure that all piping fits and no conflicts exist.

C. The Architect's review of shop drawings shall not relieve the Contractor of responsibility for deviations from the Contract drawings or specifications, unless he has, in writing, called the attention of the Architect to such deviations at the time of the submission, nor shall it relieve him from responsibility for errors or omission in such shop drawings.

1.8 COMMISSIONING

A. See 23 08 00 for roles and responsibilities of commissioning.

B. Provide all necessary commissioning assistance, equipment and documentation as required by the Commissioning Plan.

C. The duty and responsibility for all Division 22 commissioning work shall be assigned to a specific individual. Inform the General Contractor, Commissioning Professional (CCXP) of the contact information for the person so assigned.

D. Perform corrective actions needed to resolve deficiencies identified during commissioning. Record action taken on commissioning deficiency log.

1.9 PLUMBING PERMIT

A. Plumbing contractor shall obtain the Plumbing Permit. The Plumbing Permit has been submitted and paid for by the Owner. Plumbing contractor is responsible to submit, pay for and obtain any additional permits required.

B. Plumbing contractor shall prepare all documents for additional required permit application(s), submit for and obtain the permit(s). All costs and fees to obtain the permit(s) shall be paid by the Plumbing Contractor. Additional permit(s) may include but are not limited to:
   1. Mechanical permit for Heat Pump Water Heater Equipment.
   2. Pressure Vessel permit for Hot Water Storage Tanks.

C. Contractor shall not commence work until permit is obtained. Contractor is solely responsible to insure that the permit application and any revisions are submitted in a timely manner so as not to impact project schedule.

1.10 QUALITY ASSURANCE

A. Perform Work in accordance with ASME B31.9 – Building Services Piping for installation of piping systems and ASME Section IX – Welding and Brazing Qualifications for welding materials and procedures.

B. Perform Work in accordance with the Uniform Plumbing Code including State and local amendments.

C. Provide products requiring electrical connections listed and classified by UL as suitable for purpose specified and indicated.

D. Perform Work in accordance with Washington State Energy Code.

1.11 QUALIFICATIONS

A. Manufacturer: Company specializing in manufacturing Products specified in this section with minimum three years' experience.

B. Installer: Company specializing in performing Work of this section with minimum three years' experience.

1.12 SEQUENCING

A. Sequence balancing between completion of systems tested and Date of Substantial Completion.

1.13 DELIVERY, STORAGE, AND HANDLING

A. Accept materials on site in original factory packaging, labeled with manufacturer's identification.

B. Protect all equipment, materials, and insulation from weather, construction traffic, dirt, water, chemicals, and damage by storing in original packaging and under cover. Where original packaging is insufficient, provide additional protection. Maintain protection in place until installation.

C. Inspect all products and materials for damage prior to installation.

D. Protect piping from all entry of foreign materials by providing temporary end caps or closures on piping and fittings. Furnish temporary protective coating on cast iron and steel valves.

E. Protect heat exchangers and tanks with temporary inlet and outlet caps. Maintain caps in place until installation.

F. Protect materials and finishes during handling and installation to prevent damage.

G. Comply with manufacturer's installation instruction for rigging, unloading and transporting units.

H. Protect installed fixtures from damage by securing areas and by leaving factory packaging in place to protect fixtures and prevent use.

1.14 ENVIRONMENTAL REQUIREMENTS

A. Do not apply fire stopping materials when temperature of substrate material and ambient air is below 60 degrees F. Maintain this minimum temperature before, during, and for minimum 3 days after installation of fire stopping materials.

B. Provide ventilation in areas to receive solvent cured materials.

C. Do not install underground piping or valves when bedding is wet or frozen.

D. Install insulation only when ambient temperature and humidity conditions are within range recommended by manufacturer. Maintain temperature during and after installation for minimum period of 24 hours.

E. Do not install instruments when areas are under construction, except rough in, taps, supports and test plugs.

1.15 FIELD MEASUREMENTS

A. Verify field measurements prior to fabrication.

B. Verify by field measurements, sizes and configurations are compatible with wall construction and layout.

C. Existing systems and utility lines indicated on drawings are in accordance with information furnished to the Architect and may not be complete. Contractor is responsible for locating, uncovering, disposing of or maintaining existing systems.

1.16 COORDINATION

A. Visit the site and become familiar with existing conditions affecting work.

B. Verify locations of any overhead or buried utilities on or near site. Determine such locations in conjunction with all public and private utility companies and with all authorities having jurisdiction.

C. Existing systems and utility lines indicated on drawings are in accordance with information furnished to the Architect and may not be complete. Contractor is responsible for locating, uncovering, disposing of or maintaining existing systems.

D. Plumbing drawings are diagrammatic and do not indicate all possible site conditions. The contractor shall verify all measurements, dimensions and connections on site and coordinate between trades to preclude interferences. The contractor shall provide adjustments to piping as necessary to fit conditions including but is not limited to relocation, offsets, and transitions.

E. In the event of a conflict with other trades of work, the following priority from highest to lowest shall be followed: Structural, lighting, HVAC, plumbing/piping and sprinklers.

Starting with the lowest priority, the HVAC, plumbing, and sprinkler contractors shall provide whatever materials, offsets, labor etc. is required to resolve the conflict.

F. When discrepancies occur between plans and specifications, the Architect will determine which takes precedence and the Contractor shall perform the selected requirement at no additional cost.

G. Prior to ordering equipment cross-check plumbing and electrical drawings and specifications to assure proper location and electrical characteristics of connections serving mechanical and electrical equipment.

H. Advise the Architect of any modifications required to suit equipment furnished. Costs for modifications due to equipment substitution will be borne by the contractor.

I. Wherever conflicts occur between different parts of the Contract Documents the greater quantity, the better quality, or larger size shall prevail unless the Architect informs the Contractor otherwise in writing.

J. The scale of each drawing is relatively accurate, but the Contractor is warned to obtain the necessary dimensions for any exact takeoffs from the Architect. No additional cost to the Owner will be considered for failure to obtain exact dimensions where not clear or in error on the drawings. Any device or fixture roughed in improperly and not positioned on implied centerlines or as required by good practice must be repositioned at no cost to the Owner.

K. Where the word ‘verify’ is used on the documents, the contractor shall field verify the existing conditions and modify the scope of the installation as required to meet the verified conditions without additional cost to the Owner.

L. Coordinate trenching, excavating, bedding, backfilling of buried systems with requirements of this specification.

M. Coordinate wall openings, piping rough-in locations, concrete housekeeping pads, and electrical rough-in locations to accommodate Work of this Section.

1.17 CUTTING, FITTING, REPAIRING AND PATCHING

A. Arrange and pay for all cutting, fitting, repairing, patching and finishing of work by other trades where necessary for installation of plumbing work. Perform work only with craftsmen skilled in their respective trades.

B. Avoid cutting, where possible, by setting sleeves, frames, etc., and by coordinating for openings in advance. Assist other trades in securing correct location and placement of rough-frames, sleeves, openings, etc. for piping.

C. Cut all holes neatly and as small as possible to admit work. Perform cutting in manner so as not to weaken walls, partitions or floors. Drill holes required to be cut in floors without breaking out around holes.

1.18 SALVAGE

A. Remove excess piping and plug or cap any unused branch connections. Remove scrap pipe and all other excess materials from the site.

B. Comply with contractor’s Construction Waste Management Plan.

1.19 ELECTRICAL

A. Motors:
1. Temperature Rating: Rated for 40 degree C environment with maximum 50 degree C temperature rise for continuous duty at full load.
2. Starting Capability: Not less than 12 starts per hour.
3. Phase Characteristics: Squirrel-cage induction poly-phase motors for 3/4 HP and larger, and capacitor-start single-phase motors for 1/2 HP and smaller. At equipment manufacturer's option, 1/6 HP and smaller may be split-phase type.
4. Service Factor: 1.15 for polyphase motors and 1.35 for single-phase motors.
5. Enclosure Type: Open drip-proof motors for indoor use where satisfactorily housed or remotely located during operation, and guarded drip-proof motors where exposed to contact by employees or building occupants. Weather-protected Type I for outdoor use, Type II, where not housed.
6. Overload Protection: Built-in thermal overload protection.
7. Name Plate: Indicate full identification of manufacturer, ratings, characteristics, construction, special features and similar information.
8. All motor efficiencies shall conform to Washington State Energy Code and NEMA MG-1.

B. Motor Starters: By plumbing equipment manufacturer where factory mounted controls are provided. Variable frequency drives by Division 22, all other starters provided by Electrical Contractor.

C. Power Wiring: By Electrical Contractor.

D. Control Wiring: Responsibility of Division 22, including all line and low voltage control wiring. Owner will not entertain additional cost due to lack of coordination between Plumbing Contractor and Electrical Contractor.

1.20 PROJECT CLOSEOUT

A. Completion, submission and approval of the following is required for final project closeout.
1. Execution of Architect's and Engineer’s final observation reports (punchlist)
2. Operating and Maintenance Instructions
3. Operating and Maintenance Manual
4. Equipment and Pipe Cleaning
5. Record Drawings
6. Testing
7. Commissioning
8. Warranty

B. See Division 01 for additional requirements.

1.21 OPERATING AND MAINTENANCE INSTRUCTIONS

A. General: In addition to requirements of Division 01, following initial operation of plumbing systems and prior to acceptance by the Architect, perform the following services.

B. At least two weeks prior to each instruction period, give written notification of readiness to proceed to the Architect and Owner, and obtain mutually acceptable dates.

C. Conduct demonstrations and instructions for the Owner's representatives, pointing out requirements for operating, servicing and maintaining equipment and systems. Describe

general system operation and specific equipment functions. Cover all equipment calibration, setpoint adjustment, safeties and alarms.

D. Furnish qualifications of Contractor's personnel in charge of the instruction; foreman position is minimum acceptable. Where equipment startup is performed by supplier's or manufacturer's personnel, those personnel should also provide training on that equipment.

E. During demonstrations and instructions include and reference information from maintenance manuals and contract drawings.
   1. Provide documentation of all instruction which includes:
      a. Date and time of instruction
      b. Name, affiliation and qualifications of the instructor
      c. Name and affiliation of the attendees
      d. Topics, systems, and equipment covered
      e. Length of instruction

F. Minimum duration of instruction periods:
   1. Plumbing Systems 2 hours

1.22 OPERATING AND MAINTENANCE MANUALS

A. Contents: Furnish, in accord with Division 1, one PDF and one bound copy of operating and maintenance manuals to include the following:
   1. Manufacturers, suppliers, contractor names, addresses and phone numbers.
   2. Warranty service contractors' names, address and phone numbers (if different from above).
   3. Schedule and description of routine maintenance for each component to include oiling, lubrication and greasing data.
   4. Test data log.
   5. Manufacturer's cuts and rating tables, including brochures for all submittal items.
   6. Part numbers of all replaceable items.
   7. Control diagrams and operation sequence.
   8. Written guarantees.
   9. Record drawings corrected and completed.
   10. Completed equipment start-up forms and checklists.

B. Operation and Maintenance Data:
   1. Submit frequency of treatment required for interceptors. Include, spare parts lists, exploded assembly views for pumps and equipment.
   2. Submit fixture, trim, exploded view and replacement parts lists.
   3. Submit replacement part numbers and availability, and nearest service depot location and telephone number.

C. Binders:
   1. Furnish typewritten or printed index and tabbed dividers between principal categories.
   2. Bind each manual in a hard-backed loose-leaf binder.

D. Imprint on cover:
   1. Name of project.
   2. Owner.
   3. Location of project.
   4. Architect.
   5. Contractor.

6. Year of completion.

E. Imprint on backing:
1. Name of project.
2. Year of completion.

F. Submittals:
1. Preliminary Copies: Prior to scheduled completion of the project, submit one PDF copy for review by the Architect.
2. Final Copies: After approval of the preliminary copy, submit one PDF and one bound copy to the Owner.

1.23 EQUIPMENT AND PIPE CLEANING

A. Clean interior and exterior of all equipment. Equipment shall be free of dirt, construction debris, corrosion, etc.

B. Adequate provisions shall be made during construction to eliminate dirt, debris or other material from entering and collecting inside of pipe and equipment. Any collection of material shall be thoroughly cleaned before equipment startup and if necessary again before owner occupancy.

C. Clean exterior of all exposed pipe and equipment.

1.24 RECORD DRAWINGS

A. Submit one digital file with all drawings in PDF format.

B. Show location of equipment, location and size of piping. Locate all valves and similar equipment with tag or label identification. Indicate locations and elevations of exterior pipe and utility connections. Maintain continuously updated drawings during progress of project.

C. Record actual locations of equipment, clean-outs, controlling devices, and all above grade, under-floor, and buried piping.

1.25 TESTING

A. Provide completed start-up forms and checklists.

B. Coordinate Test and Balance with Division 23 05 93. Provide all necessary assistance and documentation.

1.26 WARRANTIES AND CONTRACTOR'S GUARANTEE

A. All work, material and equipment shall be free of defect, complete and in perfect operating order at time of delivery to Owner.

B. Furnish one year warranty from date of substantial completion for all systems unless specifically noted otherwise.

C. Without cost to Owner, **correct all defects and failures discovered within one year from date of final acceptance**, except when in the opinion of the Architect a failure is due to neglect or carelessness of the Owner.

D. The guarantee of the Contractor is independent of shorter time limits by any manufacturer of equipment furnished. Submit with Operation and Maintenance Manual all guarantees that exceed one year (e.g.: water heaters).

E. Make all necessary balancing and control adjustments during first year of operation.

F. The presence of any inspector or observer during any construction does not relieve the Contractor from responsibility for defects discovered after completion of the work.

PART 2 NOT USED

PART 3 EXECUTION

3.1 DOCUMENTATION

A. Additional plan submittals to reviewing authority: If additional drawing submittals are required at any time during construction contractor shall submit drawings, review with authority, and pick up subsequent approved drawings. Engineer will revise and/or prepare drawings for submittal.

3.2 INSPECTION

A. Do not allow any work to be covered up or enclosed until inspected, tested and approved by the Architect and all authorities having jurisdiction over the work.

B. Should any work be enclosed or covered up before such inspection and test, Contractor shall at his own expense uncover work, and after it has been inspected, tested and approved, make all repairs as necessary to restore all work disturbed by him to its original condition.

3.3 FIELD QUALITY CONTROL

A. Inspect installed fire stopping for compliance with specifications and submitted schedule.

B. Inspect isolated equipment after installation for proper movement clearance.

C. Test domestic water piping system in accordance with applicable code and local authority having jurisdiction.

D. Test sanitary waste and vent piping system in accordance with applicable code and local authority having jurisdiction.

E. Test storm drainage piping system in accordance with applicable code and local authority having jurisdiction.

3.4 CLEANING

A. Clean adjacent surfaces of fire stopping materials.

B. Clean plumbing fixtures and equipment.

C. Use acceptable cleaning products per IAQ Management Plan.

3.5 PROTECTION OF FINISHED WORK

A. Protect adjacent surfaces from damage by material installation.

B. Do not permit use of plumbing fixtures before final acceptance.

END OF SECTION

SECTION 22 05 00 - COMMON WORK RESULTS FOR PLUMBING

PART 1 GENERAL

1.1 SUMMARY

A. Section Includes:
1. General Plumbing Valves.
2. Hangers and Supports.
3. Vibration and Seismic Controls.
4. Firestopping.
5. Access Panels
6. Tags and Identification.

1.2 GENERAL REQUIREMENTS

A. Comply with requirements and recommendations of Manufacturers Standardization Society of the Valve and Fittings Industry (MSS) Standards SP-58 and SP-69.

B. Comply with Federal "Reduction of Lead in Drinking Water Act" – 2011. Pipes, pipe fittings, plumbing fittings and fixtures shall be "Lead Free" meaning not more than a weighted average of 0.25% lead in wetted surfaces.

1.3 SCOPE

A. This section includes products, assemblies and methods applicable to more than one of the systems specified in the following sections of Division 22.

1.4 MATERIALS AND EQUIPMENT

A. Where two or more units of same class of equipment are required, use products of a single manufacturer. All equipment shall be new and free from damage.

B. Provide major equipment components with manufacturer's name, address, catalog number and capacity indicated on a nameplate, securely affixed in a conspicuous place.

C. Furnish standard and fabricated hangers and supports complete with necessary inserts, bolts, nuts, rods, washers and other accessories.

1.5 QUALITY ASSURANCE

A. Installed products shall have surface Burning Characteristics: 25/50 flame spread/smoke developed index when tested in accordance with ASTM E84.

B. Perform work in accordance with local jurisdiction’s requirements and AWS D1.1 for welding hanger and support attachments to building structure.

PART 2 PRODUCTS

2.1 GENERAL VALVE REQUIREMENTS

A. Bronze valves shall be made with dezincification-resistant materials. Bronze valves made with copper alloy (brass) containing more than 15 percent zinc are not permitted. Brass valves are not permitted.

B. Valve Pressure and Temperature Ratings: Not less than indicated and as required for system pressures and temperatures.

C. Valve Sizes: Same as upstream piping unless otherwise indicated.

2.2 GATE VALVES

A. Manufacturers: NIBCO or equal by Apollo, Hammond, Milwaukee, Stockham or approved equal.

B. 4 inches and Smaller: Use ball valve or butterfly valve in lieu of gate valve.

2.3 BALL VALVES

A. Manufacturers: NIBCO or equal by Apollo, Hammond, Milwaukee, Stockham or approved equal.

B. 2 inches and Smaller: Lead-Free, NSF-61-8, UPC-IGC-157, MSS SP 110, 600 psi WOG, two piece silicon performance bronze body, bronze trim, bronze ball, full port, PTFE seats, blow-out proof stem, solder or threaded ends with union, lever handle. For insulated piping provide 2" extended handles of non-thermal conductive material. Nibco Model T/S-585-80-LF.

2.4 CHECK VALVES

A. Swing Check Valves:
1. Manufacturers: NIBCO or equal by Apollo, Hammond, Milwaukee, Stockham or approved equal.
2. 2 inches and Smaller: Lead-Free, NSF-61-8, MSS SP 80, 200 psi CWP, silicone performance bronze body and cap, bronze disc with PTFE seat, Y-pattern design, solder or threaded ends. Nibco Model T/S-413-Y-LF.

B. Spring Loaded Check Valves:
1. Manufacturers: NIBCO or equal by Apollo, Hammond, Milwaukee, Stockham, Titan or approved equal.
2. 2 inches and Smaller: Lead-Free, NSF-61-8, MSS SP 80, 250 psi CWP, silicone performance bronze body, in-line spring lift check, silent closing, PTFE disc, integral seat, solder or threaded ends. Nibco Model T/S-480-Y-LF.

2.5 PIPE HANGERS AND SUPPORTS

A. Provide hangers and supports with incompressible insulation inserts and shields for all piping to be insulated per 220700.
1. Manufacturer: Pipe Shields, INC or approved equal.
2. Material: Calcium Silicate or Uretherne per temperature application.
3. Thickness: Insert thickness shall match required insulation thickness per 220700.

B. Plumbing Piping - DWV: Cast-iron or PVC
1. Hangers for Pipe Sizes 1/2 to 1-1/2 inch: Carbon steel, adjustable swivel, split ring.
2. Hangers for Pipe Sizes 2 inches and Larger: Carbon steel, adjustable, clevis.
3. Multiple or Trapeze Hangers: Steel channels with welded spacers and hanger rods.
4. Wall Support for Pipe Sizes 3 inches and Smaller: Cast iron hook.
5. Wall Support for Pipe Sizes 4 inches and Larger: Welded steel bracket and wrought steel clamp.

6. Vertical Support: Steel riser clamp.
7. Floor Support: Cast iron adjustable pipe saddle, lock nut, nipple, floor flange, and concrete pier or steel support.
8. Copper Pipe Support: Copper-plated, carbon-steel adjustable, ring.

C. Plumbing Piping - Water: Copper
1. Hangers for Pipe Sizes 1/2 to 1-1/2 inch: Carbon steel, adjustable swivel, split ring, with rigid insulation inserts.
2. Hangers for Cold Pipe Sizes 2 inches and Larger: Carbon steel, adjustable, clevis, with rigid insulation inserts and saddle.
3. Hangers for Hot Pipe Sizes 2 to 4 inches: Carbon steel, adjustable, clevis, with rigid insulation inserts and saddle.
4. Hangers for Hot Pipe Sizes 6 inches and Larger: Adjustable steel yoke, cast iron roll, double hanger, with rigid insulation inserts and saddle.
5. Multiple or Trapeze Hangers: Steel channels with welded spacers and hanger rods.
6. Multiple or Trapeze Hangers for Hot Pipe Sizes 6 inches and Larger: Steel channels with welded spacers and hanger rods, cast iron roll.
7. Wall Support for Pipe Sizes 3 inches and Smaller: Cast iron hook.
8. Wall Support for Pipe Sizes 4 inches and Larger: Welded steel bracket and wrought steel clamp.
9. Wall Support for Hot Pipe Sizes 6 inches and Larger: Welded steel bracket and wrought steel clamp with adjustable steel yoke and cast iron roll.
10. Vertical Support: Steel riser clamp.
11. Floor Support for Cold Pipe: Cast iron adjustable pipe saddle, lock nut, nipple, floor flange, and concrete pier or steel support.
12. Floor Support for Hot Pipe Sizes 4 inches and Smaller: Cast iron adjustable pipe saddle, lock nut, nipple, floor flange, and concrete pier or steel support.
13. Floor Support for Hot Pipe Sizes 6 inches and Larger: Adjustable cast iron roll and stand, steel screws, and concrete pier or steel support.
14. Copper Pipe Support: Copper-plated, Carbon-steel ring.

D. Steel Piping: Natural Gas, LPG, Fuel Oil
1. Hangers for Pipe Sizes 1/2 to 1-1/2 inch: Carbon steel, adjustable swivel, split ring.
2. Hangers for Sizes 2 inches and Larger: Carbon steel, adjustable, clevis.
3. Multiple or Trapeze Hangers: Steel channels with welded spacers and hanger rods.
4. Wall Support for Pipe Sizes 3 inches and Smaller: Cast iron hooks.
5. Wall Support for Pipe Sizes 4 inches and Larger: Welded steel bracket and wrought steel clamp.
6. Vertical Support: Steel riser clamp.
7. Floor Support for Pipe: Cast iron adjustable pipe saddle, lock nut, nipple, floor flange, and concrete pier or steel support.

E. Secondary Pipe Positioning and Supports:
1. Makeshift, field devised methods of plumbing pipe support, such as with the use of scrap framing materials, are not allowed. Support and positioning of piping shall be by means of engineered methods that comply with IAPMO PS 42-96. Hubbard "HOLDRITE" support systems or approved equal.
2. For vertical mid-span supports of piping 4” and under, use HOLDRITE Stout Brackets™ with HOLDRITE Stout Clamps or two-hole pipe clamps (MSS Type 26).
3. For plenum applications use pipe supports that meet ASTM E-84 25/50 standards, such as the HOLDRITE Flame Fighter™ or approved equal.

2.6 HANGER ACCESSORIES

A. Hanger Rods: Mild steel threaded both ends, threaded on one end, or continuous threaded.

2.7 INSERTS

A. Malleable iron case of galvanized steel shell and expander plug for threaded connection with lateral adjustment, top slot for reinforcing rods, lugs for attaching to forms; size inserts to suit threaded hanger rods.

2.8 ACCESS PANELS

A. Milcor or approved equal.

B. Include an allowance for a minimum of 6 access panels.

C. Architectural grade, 16 guage frame and door, painted steel or stainless steel based on application.

2.9 UNIONS AND FLANGES

A. Unions for Pipe 2 inches and Smaller:
1. Ferrous Piping: Class 150, 300 psi CWP, malleable iron, threaded.
2. Copper Piping: Class 150, 300 psi CWP, bronze unions.
3. Dielectric Connections: Union with galvanized or plated steel threaded end, copper solder end, water impervious isolation barrier.
4. PVC Piping: PVC.
5. CPVC Piping: CPVC.

B. PVC Pipe Materials: For connections to equipment and valves with threaded connections, furnish solvent-weld socket to screwed joint adapters and unions, or Schedule 80 threaded PVC pipe (ASTM D2464).

2.10 FLASHING

A. Metal Flashing: 26 gage galvanized steel.

B. Metal Counterflashing: 22 gage galvanized steel.

C. Lead Flashing:
1. Waterproofing: 5 lb./sq. ft sheet lead.
2. Soundproofing: 1 lb./sq. ft sheet lead.

D. Flexible Flashing: 47 mil thick sheet butyl; compatible with roofing.

E. Caps: Steel, 22 gage minimum; 16 gage at fire resistant elements.

2.11 SLEEVES

A. Sleeves for Pipes Through Non-fire Rated Floors: 18 gage galvanized steel.

B. Sleeves for Pipes Through Non-fire Rated Beams, Walls, Footings, and Potentially Wet Floors: Steel pipe or 18 gage galvanized steel.

C. Sealant: Acrylic

D. Size large enough to allow for movement due to expansion and to provide for continuous insulation or installation of fire sealant at fire-rated walls. Note that insulation is discontinuous at fire walls.

2.12 MECHANICAL SLEEVE SEALS

A. Manufacturers: Metraflex Metraseal, Thunderline Link-Seal or approved equal.

B. Product Description: Modular mechanical type, consisting of interlocking synthetic rubber links shaped to continuously fill annular space between object and sleeve, connected with bolts and pressure plates causing rubber sealing elements to expand when tightened, providing watertight seal and electrical insulation.

2.13 FORMED STEEL CHANNEL

A. Manufacturers: Allied Tube & Conduit, B-Line Systems, Unistrut or approved equal.

B. Product Description: Galvanized 12 gage steel with holes 1-1/2 inches on center.

2.14 SUPPORT ACCESSORIES

A. Pipe Alignment Guides: Two piece welded steel with enamel paint, bolted, with spider to fit standard pipe, frame with four mounting holes, clearance for minimum 1 inch thick insulation, minimum 3 inch travel.

B. Swivel Joints: Bronze body, double ball bearing race, field lubricated, with rubber (Buna-N) o-ring seals.

2.15 FIRESTOPPING-APPLIED

A. Manufacturers: RectorSeal, Dow Corning, 3M Fire Protection or approved equal.

B. General:
1. Fire stopping materials shall conform to Flame (F) and Temperature (T) ratings as required by applicable building codes and tested by nationally accepted test agencies per ASTM E 814 or UL 1479 fire tests for through penetrations, and ASTM E 1966 or UL 2079 for construction joints, and UL 2307 for perimeter edge joints.
2. Fire stopping material shall be free of asbestos, PCBs, ethylene glycol, and lead.
3. Do not use any product containing solvents or that requires hazardous waste disposal.
4. Fire stopping shall be performed by a contractor trained or approved by firestop manufacturer.
5. Select products with rating not less than rating of wall or floor being penetrated.

C. Single Source Responsibility: Provide firestop systems for all conditions from a single supplier.

D. Product Description: Provide Latex caulk/sealant, Silicone caulk/sealant, Intumescent Wrap Strip, Firestop Putty, Firestop Collar or Intumescent Sleeve to meet each specific application and performance requirement.

E. Primer: Type recommended by firestopping manufacturer for specific substrate surfaces and suitable for required fire ratings.

F. Installation Accessories: Provide clips, collars, fasteners, temporary stops or dams, and other devices required to position and retain materials in place.
   1. Forming/Damming Materials: Mineral fiberboard, backer rod or other type recommended by Manufacturer's tested system.

2.16 VIBRATION ISOLATORS

A. Manufacturers: Mason, Amber Booth or approved equal.

B. Neoprene Pad Isolators:
   1. Rubber or neoprene-waffle pads.
      a. 30 durometer.
      b. Minimum 1/2 inch thick.
      c. Maximum loading 40 psi.
      d. Height of ribs: not to exceed 0.7 times width.
   2. Configuration: Single layer.

C. Rubber Mount or Hanger: Molded rubber designed for 0.5 inches deflection with threaded insert.

2.17 TAGS

A. Plastic Tags: Laminated three-layer plastic with engraved black letters on light contrasting background color. Tag size minimum 1-1/2 inches high.

B. Metal Tags: Brass, Aluminum or Stainless Steel with stamped letters; tag size minimum 1-1/2 inches diameter with finished edges. Plain English designations.

C. Information Tags: Clear plastic with printed "Danger," "Caution," or "Warning" and message; size 3-1/4 x 5-5/8 inches with grommet and self-locking nylon ties.

D. Tag Chart: Plain English designations so no chart or index is required.

2.18 PIPE MARKERS

A. Color and Lettering shall conform to ASME A13.1 and UPC. Specific examples are noted in the table below.

Service	**Background Color**	**Letter Color**	**Legend**
Domestic Cold Water	Green	White	DOMESTIC COLD WATER
Domestic Hot Water	Green	White	DOMESTIC HOT WATER
Domestic Recirculation	Green	White	DHW RECIRC
Tempered Domestic Water	Green	White	TEMPERED WATER
Waste	Black	White	SANITARY SEWER
Vent	Black	White	SANITARY VENT
Condensate Drain	Black	White	CONDENSATE
Non-potable Water (NPW)	Yellow	Black	CAUTION: NONPOTABLE WATER, DO NOT DRINK

Compressed Air	Blue	White	COMPRESSED AIR {xxx} PSI
Propane	Yellow	Black	PROPANE GAS

B. Plastic Pipe Markers: Factory fabricated, flexible, semi-rigid plastic, preformed to fit around pipe or pipe covering. Larger sizes may have maximum sheet size with spring fastener.

C. Plastic Tape Pipe Markers: Flexible, vinyl film tape with pressure sensitive adhesive backing and printed markings.

2.19 CEILING TACKS

A. Description: Steel with 3/4 inch diameter color-coded head.

B. Color code plumbing valves green.

2.20 LOCKOUT DEVICES

A. Lockout Hasps: Anodized aluminum hasp with erasable label surface; size minimum 7-1/4 x 3 inches.

B. Valve Lockout Devices: Nylon device preventing access to valve operator, accepting lock shackle.

PART 3 EXECUTION

3.1 EXISTING WORK

A. Provide access to existing piping and equipment and other installations remaining active and requiring access.

B. Extend existing piping installations using materials and methods compatible with existing installations.

3.2 SURFACE PREPARATION

A. Clean substrate surfaces of dirt, dust, grease, oil, loose material, or other matter affecting bond of firestopping material.

B. Remove incompatible materials affecting bond of adhesives or firestopping.

C. Install backing or damming materials to arrest liquid material leakage.

D. Obtain permission from Architect/Engineer before drilling or cutting structural members.

E. Degrease and clean surfaces to receive adhesive for identification materials.

3.3 INSTALLATION-CLEARANCE

A. Appliances and equipment shall be accessible for inspection, service, repair and replacement.

B. A minimum of 36” of clearance shall be provided in front of the control side of appliances and equipment. Provide additional space when required by NEC.

3.4 INSTALLATION - INSERTS

A. Install inserts for placement in concrete forms.

B. Install inserts for suspending hangers from reinforced concrete slabs and sides of reinforced concrete beams.

C. Provide hooked rod to concrete reinforcement section for inserts carrying pipe 4 inches and larger.

D. Where concrete slabs form finished ceiling, locate inserts flush with slab surface.

E. Where inserts are omitted, drill through concrete slab from below and provide through-bolt with recessed square steel plate and nut recessed into and grouted flush with slab.

3.5 INSTALLATION – ACCESS PANELS

A. Furnish access panels for installation at all concealed equipment which requires service, maintenance or adjustment to include but not limited to equipment, valves, open drains, control valves and controls.

B. Provide location layout and required size for all access panels to general contractor. Layout shall be regular and consistent, maintain a uniform wall panel height of 24” centerline above finished floor, unless noted otherwise.

C. Provide fire rated access panels where installed in fire rated assembly.

D. Provide stainless steel access panels where installed in tile surfaces.

E. Furnish access panels to general contractor for installation.

F. Paint installed access panels to match wall or ceiling. Verify that panels are not painted shut.

3.6 INSTALLATION - VALVES

A. Install valves with stems upright or horizontal, not inverted.

B. Install brass male adapters each side of valves in copper piped system. Solder adapters to pipe.

C. Install 3/4 inch ball valves with cap for drains at main shut-off valves, low points of piping, bases of vertical risers, and at equipment.

D. Install valves with clearance for installation of insulation and allowing access.

E. Provide access panels where valves and fittings are not accessible.

F. Insulate valves according to application in Section 22 07 00.

G. For installation of valves in domestic water systems refer to Section 22 11 00.

3.7 VALVE APPLICATIONS

A. Install ball or butterfly valves for shut-off and to isolate equipment, part of systems, or vertical risers.

B. Install globe valves for throttling, bypass, or manual flow control services.

C. Install spring loaded check valves on discharge of pumps.

3.8 INSTALLATION - PIPE HANGERS AND SUPPORTS

A. Support horizontal piping as scheduled.

B. Install hangers with minimum 1/2 inch space between finished covering and adjacent work.

C. Place hangers within 12 inches of each horizontal elbow.

D. Use hangers with 1-1/2 inch minimum vertical adjustment.

E. Support vertical piping at every floor. Support vertical cast iron pipe at each floor at hub.

F. Where piping is parallel and at same elevation, provide multiple pipe or trapeze hangers.

G. Adjust hangers and supports as required to bring system to proper line and grade. Piping shall be plumb with floor and parallel/perpendicular to building structure.

H. Support riser piping independently of connected horizontal piping.

I. Provide copper plated hangers and supports for copper piping, or sheet lead packing between pipe and hanger.

J. Design hangers for pipe movement without disengagement of supported pipe.

K. Prime coat exposed steel hangers and supports. Hangers and supports located in crawl spaces, pipe shafts, and suspended ceiling spaces are not considered exposed.

L. Provide clearance in hangers and from structure and other equipment for installation of insulation. Insulated piping shall have insulation run continuous through hangers and supports with use of rigid inserts. Insulation shall be glued to both sides of insert at hangers and supports, no insulation gaps are allowed. Refer to Section 22 07 00.

M. Support of pipe, tubing and equipment shall be accomplished by means of engineered products, specific to each application. Makeshift, field devised methods shall not be allowed.

N. Support horizontal cast iron pipe adjacent to each hub, with 5 feet maximum spacing between hangers.

3.9 INSTALLATION – SEISMIC CONTROLS

A. Provide seismic restraints and hangers in compliance with IBC 1613 and ASCE 7.

B. Seismic Bracing: Follow IBC 1613, ASCE 7, SMACNA Seismic Restraint Manual and the following.
   1. Bracing shall be bidder designed to resist seismic loading in accord with Chapter 16 of the International Building Code, ASCE 7 or the SMACNA guideline.
   2. Provide seismic calculations as required for Ip = 1.5.

3.10 INSTALLATION-PIPING PROTECTION

A. Provide protective shield plates in concealed locations where piping, other than cast-iron or steel, is installed in studs, joists or rafters. Plates shall be 16 gage steel and cover the pipe area plus 2". Shields may be omitted if piping is more than 1-1/2" from nearest edge of structural member.

B. Prevent contact between dissimilar metals, such as copper tubing and steel, by use of copper-plated, plastic coated, or flexible materials. All supports which contact copper tubing shall be copper plated.

3.11 INSTALLATION - EQUIPMENT BASES AND SUPPORTS

A. Provide housekeeping pads of concrete, minimum 4 inches thick and extending 6 inches beyond supported equipment.

B. Using templates furnished with equipment, install anchor bolts, and accessories for mounting and anchoring equipment.

C. Construct supports of steel members, formed steel channel or steel pipe and fittings. Brace and fasten with flanges bolted to structure.

D. Provide rigid anchors for pipes after vibration isolation components are installed.

E. When water heaters and similar equipment are installed in a suspended application, an engineered and manufactured platform, such as the Hubbard Enterprises/HOLDRITE Suspended Water Heater Platform shall be used. Weight loading capability shall include a minimum safety factor of 2.

3.12 INSTALLATION - FLASHING

A. Provide flexible flashing and metal counterflashing where piping penetrates weather or waterproofed walls, floors, and roofs.

B. Provide acoustical lead flashing around pipes penetrating equipment rooms for sound control.

C. Flash vent and soil pipes projecting 3 inches minimum above finished roof surface with lead worked 1 inch minimum into hub, 8 inches minimum clear on sides with 24 x 24 inches sheet size. For pipes through outside walls, turn flanges back into wall and caulk, metal counter-flash, and seal.

D. Flash floor drains in floors with topping over finished areas with lead, 10 inches clear on sides with minimum 36 x 36 inch sheet size. Fasten flashing to drain clamp device.

E. Seal drains watertight to adjacent materials.

F. Adjust storm collars tight to pipe with bolts; caulk around top edge. Use storm collars above roof jacks. Screw vertical flange section to face of curb.

3.13 INSTALLATION - SLEEVES

A. Exterior watertight entries: Seal with mechanical sleeve seals.

B. Set sleeves in position in forms. Provide reinforcing around sleeves.

C. Size sleeves large enough to allow for movement due to expansion and contraction. Provide for continuous insulation wrapping.

D. Extend sleeves through floors 1 inch above finished floor level. Caulk sleeves.

E. Where piping penetrates floor, ceiling, or wall, close off space between pipe and adjacent work with insulation and caulk or fireproof airtight. Provide close fitting metal collar or escutcheon covers at both sides of penetration.

3.14 INSTALLATION – FIRESTOPPING AND SEALS AT PARTITIONS

A. Install material at fire rated construction perimeters and openings containing penetrating sleeves, piping and other items requiring firestopping.

B. Apply primer where recommended by manufacturer for type of firestopping material and substrate involved, and as required for compliance with required fire ratings.

C. Apply firestopping material in sufficient thickness to achieve required fire and smoke rating and to uniform density and texture. Remove dam material after firestopping material has cured.

D. Place foamed material in layers to ensure homogenous density, filling cavities and spaces. Place sealant to completely seal junctions with adjacent dissimilar materials.

E. Place intumescent coating in sufficient coats to achieve rating required.

F. Clean adjacent surfaces of firestopping materials.

G. Fire Rated Surface:
1. Seal opening at floor, wall, partition, ceiling, and/or roof as follows:
a. Install sleeve through opening and extending beyond minimum of 1 inch on both sides of building element.
b. Size sleeve allowing minimum of 1 inch void between sleeve and building element.
c. Pack void with backing material.
d. Seal ends of sleeve with UL listed fire resistive silicone compound to meet fire rating of structure penetrated.

H. Non-Rated Surfaces:
1. Seal opening through non-fire rated wall, partition, floor, ceiling, and/or roof opening as follows:
a. Install sleeve through opening and extending beyond minimum of 1 inch on both sides of building element.
b. Size sleeve allowing minimum of 1 inch void between sleeve and building element.
2. Install escutcheons where piping penetrates non-fire rated surfaces in occupied spaces.
3. Exterior wall openings below grade: Assemble rubber links of mechanical sealing device to size of piping and tighten in place, in accordance with manufacturer's instructions.
4. Interior partitions: Seal pipe penetrations air tight. Apply sealant to both sides of penetration to completely fill annular space between sleeve and conduit.

3.15 INSTALLATION – VIBRATION ISOLATION

A. Install isolation for motor driven equipment.

B. Install flexible pipe connectors on pipes connected to equipment supported by vibration isolation. Provide line size flexible connectors.

C. Install flexible connectors at right angles to displacement. Install one end immediately adjacent to isolated equipment and anchor other ends. Install in horizontal plane unless indicated otherwise.

D. Provide grooved piping systems with minimum of three flexible couplings instead of flexible connector supported by vibration isolation.

E. Adjust equipment level.

F. Prior to making piping connections to equipment with operating weights substantially different from installed weights, block up equipment with temporary shims to final height. When full load is applied, adjust isolators to load to allow shim removal.

3.16 INSTALLATION - IDENTIFICATION

A. Install identifying devices after completion of coverings and painting.

B. Install plastic nameplates with corrosive-resistant mechanical fasteners, or adhesive.

C. Install labels with sufficient adhesive for permanent adhesion and seal with clear lacquer. For unfinished canvas covering, apply paint primer before applying labels.

D. Identify nonpotable water outlets with plastic permanent mounted sign in uppercase lettering which reads, “CAUTION: NONPOTABLE WATER, DO NOT DRINK.” Signage shall be black lettering on yellow background.

E. Nameplates: Identify plumbing equipment (water heaters, pumps, heat transfer equipment, tanks, and water treatment devices) with plastic nameplates.
1. Identify in-line pumps and other small devices with name tags.
2. Identify control panels and major control components outside panels with plastic nameplates.
3. Identity description should be as numbered on drawings or plain English description. i.e. “WH-1” or “Rain Water Storage Tank”.
4. Label automatic controls, instruments, and relays. Key to control schematic.
5. Label wall controls and switches with associated equipment designation and control function, i.e. “DCP, Timer”.

F. Valve Tags: Identify valves in main and branch piping with tags.
1. Do not provide numbered tags.
2. Provide tags with plain English description of service and function. i.e. “Domestic Hot Water, Kitchen”

G. Pipe Labels: Identify piping, concealed or exposed, with plastic tape pipe markers.
1. Identify service, flow direction, and pressure.
2. Install in clear view and align with axis of piping.
3. Locate identification on straight runs including risers and drops with spacing not to exceed 20 feet.
4. Locate adjacent to each valve and tee, at each side of penetration of structure or enclosure, and at each obstruction.

H. Provide ceiling tacks to locate valves above T-bar type panel ceilings. Locate in corner of panel closest to equipment.

I. Equipment and Valve Tag Index: Plain English designations so no chart or index is required.

3.17 PROTECTION OF FINISHED WORK

A. Protect adjacent surfaces from damage by firestoppping material installation.

3.18 SCHEDULES

A. Pipe Hanger Spacing

PIPE MATERIAL	MAXIMUM HANGER SPACING (Feet)	HANGER ROD DIAMETER (Inches)
ABS (All sizes)	4	3/8
Aluminum (All sizes)	10	1/2
Cast Iron (All Sizes)	5	3/8
Cast Iron (All Sizes) with 10 foot length of pipe	10	3/8
CPVC, 1 inch and smaller	3	1/2
CPVC, 1-1/4 inches and larger	4	1/2
Copper Tube, 1-1/4 inches and smaller	6	1/2
Copper Tube, 1-1/2 inches and larger	10	1/2
PVC (All Sizes)	4	3/8
Steel, 3 inches and smaller	6	1/2
Steel, 4 inches and larger	12	3/8

B. Pipe Isolation Schedule:

Pipe Size Inch	Isolated Distance from Equipment
1	120 diameters
2	90 diameters
3	80 diameters
4	75 diameters

C. Equipment isolation schedule:

ISOLATED EQUIPMENT	BASE		ISOLATOR	
	TYPE	THICKNESS	TYPE	DEFLECTION
Inline Pumps	N/A	N/A	Braided Flex	
Air Compressor	Concrete	4”	Neoprene	
Water Heater			Copper Flex	

END OF SECTION

SECTION 22 07 00 - PLUMBING INSULATION

PART 1 GENERAL

1.1 SUMMARY

A. Section Includes:
1. Piping system insulation.
2. Equipment insulation.
3. Pipe insulation jackets.
4. Equipment insulation jackets.
5. Insulation accessories including vapor retarders and accessories.

1.2 QUALITY ASSURANCE

A. Provide insulation tested for maximum flame spread index of 25 and maximum smoke developed index of not exceeding 50 in accordance with ASTM E84.

B. All systems components subject to heat loss or gain, such as, piping, storage tanks, vessels, valves etc. shall be insulated to conform with the Washington State Energy Code (as minimum).

1.3 IDENTIFICATION

A. Insulation shall bear a manufacturer's mark indicating the product R-value or K-value and thickness. This mark shall be visible after installation and shall be repeated at an interval of no greater than 10 feet.

B. R-values shall be based on insulation at 75 F mean temperature difference.

C. For rigid or spray foam the aged R-value per inch shall be provided in submittals.

PART 2 PRODUCTS

2.1 GLASS FIBER, RIGID

A. Manufacturers: Johns Manville Micro-Lok AP-T Plus or equal by Owens-Corning, Knauf, Manson or approved equal.

B. Insulation: Rigid, noncombustible. ASTM C547.
1. 'K' factor: 0.23 at 75 degrees F.
2. Fiberglass or Earthwool with ECOSE
3. Maximum Service Temperature: 850 degrees F.
4. Maximum Moisture Absorption: 0.2 percent by volume.
5. Density: 3.0 lb/cu ft.

C. Vapor Retarder Jacket: ASJ+ or Type I, reinforced facing, paintable. Longitudinal acrylic adhesive closure system with factory supplied butt strips. ASTM C1136.

D. Rigid clamp/hanger insert: Preformed, incompressible (Calcium Silicate or similar), matching pipe size and insulation thickness.

2.2 GLASS FIBER, BLANKET

A. Manufacturers: Johns Manville Micro-Flex or equal by Owens-Corning, Knauf, Manson or approved equal.

B. Insulation: Semi-rigid, shot-free, continuous fiber, noncombustible. ASTM C1393.
1. 'K' factor: 0.24 at 75 degrees F.
2. Maximum Service Temperature: 850 degrees F.
3. Maximum Moisture Absorption: 0.2 percent by volume.
4. Density: 2.5 lb/cu ft.

C. Vapor Retarder Jacket: Type I, reinforced facing, will accept paint. Seal with pressure sensitive tape. ASTM C1136.

2.3 POLYOLEFIN INSULATION

A. Manufacturers: IMCOA or similar.

B. Polyolefin or Polyethylene pipe insulation is **NOT ACCEPTABLE** for any application.

2.4 ELASTOMERIC CELLULAR FOAM

A. Manufacturers: Armacell AP/Armaflex, Aeroflex Aerocel or approved equal.

B. Preformed flexible, closed-cell, elastomeric thermal insulation: Type I, Tubular form, self-seal or continuous, 25/50-rated, CFC free, low VOC, 'K' factor: 0.27 at 75 degrees F. ASTM C534.

C. Rigid clamp/hanger insert: Armacell Armafix, polyurethane insert and aluminum jacket, single piece with self-adhering closure.

2.5 PIPE INSULATION AND EQUIPMENT JACKETS

A. PVC Plastic Pipe Jacket:
1. Product Description: One piece molded type fitting covers and sheet material, off-white color. ASTM D1784.
2. Thickness: 15 mil indoor, 30 mil outdoor.
3. Connections: Brush on welding adhesive.

B. Canvas Equipment Jacket:
1. Fabric: 6 oz/sq yd, plain weave cotton.
2. Composite of insulation, jacket and laces.

C. Aluminum Pipe Jacket:
1. Thickness: 0.016 inch thick sheet. ASTM B209.
2. Finish: Embossed
3. Joining: Longitudinal slip joints and 2 inch laps.
4. Fittings: 0.016 inch thick die shaped fitting covers with factory attached protective liner.
5. Metal Jacket Bands: 3/8 inch wide; 0.015 inch thick aluminum.

PART 3 EXECUTION

3.1 EXAMINATION

A. Verify piping and equipment has been tested before applying insulation materials.

B. Verify surfaces are clean and dry, with foreign material removed.

3.2 INSTALLATION

A. Apply insulation when building is thoroughly dry to prevent shrinkage.

B. Exposed Piping: Locate insulation and cover seams in least visible locations.

C. Insulate entire piping system including fittings, valves, unions, flanges, strainers, flexible connections, pump fittings, connections to equipment and expansion joints. Use canvas jackets for valves and other irregular shapes.

D. Insulate flanges and unions with removable sections and jackets.

E. Piping Inserts and Shields:
1. Insulation shall be continuous through supports and hangers with incompressible inserts and shields. Do not directly clamp/support pipe scheduled to be insulated.
2. Shields: Galvanized steel saddle between pipe clevis hangers or pipe rollers and insulation. Minimum 6 inches long, of contour matching adjoining insulation; may be factory fabricated.
3. Inserts: Between pipe clamps, hangers or rollers and piping.
4. Insert material: Compression resistant insulating material suitable for insulation type and planned temperature range and service.
5. Glue insulation to both sides of insert.
6. Shields without inserts may be used at clevis hangers on refrigerant piping 5/8” and smaller with continuous insulation.

F. Continue insulation through penetrations of building assemblies or portions of assemblies having fire resistance rating of one hour or less. Provide intumescent firestopping when continuing insulation through assembly. Finish at supports, protrusions, and interruptions.

G. Pipe Exposed in Mechanical Equipment Rooms or Finished Spaces: Finish with PVC jacket and fitting covers.

H. Heat Traced Piping: Insulate fittings, joints, and valves with insulation of like material, thickness, and finish as adjoining pipe. Size insulation large enough to enclose pipe and heat tracer.

I. Exposed Equipment: Locate insulation and cover seams in least visible locations.

J. Apply insulation close to equipment by grooving, scoring, and beveling insulation. Fasten insulation to equipment with studs, pins, clips, adhesive, wires, or bands.

K. Fill joints, cracks, seams, and depressions with bedding compound to form smooth surface. On cold equipment, use vapor retarder cement.

L. Finish insulation at supports, protrusions, and interruptions.

M. Nameplates and ASME Stamps: Bevel and seal insulation around; do not insulate over.

N. Equipment Requiring Access for Maintenance, Repair, or Cleaning: Install insulation for easy removal and replacement without damage.

3.3 SCHEDULES

A. Piping: Provide on piping as listed below. Exception: In residential units only, the water piping downstream of the submeters can be insulated per the minimum Washington State Energy Code requirements.

		PIPE SIZE			
Service	**Insulation Type**	**<1”**	**1" to 1-1/4”**	**1-1/2" to 4"**	**4" to 8”**
Domestic Cold Water	Glass Fiber RIGID	1/2"	1/2"	1/2"	1/2"
Domestic Hot Water Supply	Glass Fiber RIGID	1"	1"	1-1/2"	1-1/2"
Domestic Hot Water Recirc.	Glass Fiber RIGID	1"	1"	1-1/2"	1-1/2"
Tempered Hot Water	Glass Fiber RIGID	1"	1"	1-1/2"	1-1/2"
Domestic water H/C/R/T outside conditioned space	Glass Fiber RIGID	1-1/2”	1-1/2”	2”	2”
Domestic water H/C Building Exterior (3)	Cellular FOAM	2”	2”	2”	2”
Condensate Drains	RIGID / FOAM	1/2"	1/2"	1/2"	1/2"
Roof Drain & Overflow Bowls in conditioned area	Glass Fiber RIGID	1/2"	1/2"	1/2"	1/2"
Rainleader & Overflow Piping in conditioned area	Glass Fiber RIGID	1/2"	1/2"	1/2"	1/2"

1. Do not insulate direct burial rain leader.
2. Do not insulate direct burial cold water.
3. For all exterior piping applications use only Elastomeric Cellular Foam with Aluminum jacket.
4. For all below grade piping application use only insulation specifically engineered for application. (Closed Cell Polyurethane System)

B. Equipment: Provide on equipment as listed below.

Service	Insulation Type	Thickness	Jacket
Valves, strainers, and other domestic piping accessories	Glass Fiber BLANKET / Cellular FOAM	Per pipe schedule	Canvas bag with wire ties.

END OF SECTION

SECTION 22 11 00 - FACILITY WATER DISTRIBUTION

PART 1 GENERAL

1.1 SUMMARY

A. Section Includes:
1. Domestic water piping.
2. Piping Accessories.
3. Circuit balancing valve.
4. Reduce pressure backflow assembly.
5. Thermostatic mixing valves.
6. Pressure balanced mixing valves.

1.2 SCOPE

A. This section includes hot and cold water supply, equipment and accessories.

B. This section includes domestic hot and/or cold water consumption metering with data collection and billing software.

1.3 GENERAL REQUIREMENTS

A. Comply with Federal "Reduction of Lead in Drinking Water Act" – 2011. Pipes, pipe fittings, plumbing fittings and fixtures shall be "Lead Free" meaning not more than a weighted average of 0.25% lead in wetted surfaces.

1.4 SITE MAINS

A. Provide connections to Site water mains as indicated on drawings.

1.5 QUALITY ASSURANCE

A. The grooved coupling manufacturer’s factory trained representative shall provide on-site training for contractor’s field personnel in the use of grooving tools and installation of grooved joint products. The representative shall periodically visit the jobsite and review installation. (A distributor’s representative is not considered qualified to conduct the training or jobsite visit(s).)

B. The mechanical press fitting manufacturer’s factory trained representative shall provide on-site training for contractor’s field personnel in the use of press fittings and crimping tools. The representative shall periodically visit the jobsite and review installation. (A distributor’s representative is not considered qualified to conduct the training or jobsite visit(s).)

PART 2 PRODUCTS

2.1 DOMESTIC WATER PIPING, BURIED WITHIN 5 FEET OF BUILDING

A. Copper Tubing: Type K hard drawn or annealed. ASTM B88.
1. Fittings: ASME B16.22, ASTM B75, wrought copper.
2. Joints: Brazed
a. Copper to copper: Silver/phosphorus/copper alloy (15 percent silver). AWS A5.8 BCuP-5.

b. Copper to brass or steel: AWS Bag-5 Silver (45 percent silver)

2.2 DOMESTIC WATER PIPING, ABOVE GRADE

A. Copper Tubing: Type L hard drawn seamless. ASTM B88.
1. Fittings:
a. Wrought copper and bronze. ASME B16.22, ASTM B75.
b. Copper press with EPDM O-ring, ASME B16.22, 200 psi.
2. Joints:
a. Solder, lead free, 95-5 tin-antimony, or tin and silver. ASTM B32.
b. Press connection, Viega ProPress or approved equal.

B. Copper Tubing: Type L hard drawn, rolled grooved ends. ASTM B88.
1. Copper Grooved-End Fittings: ASME B75 copper tube or bronze ASTM B584 bronze castings, with copper tube dimensioned grooved ends (flaring of tube and fitting ends to IPS dimensions is not permitted).
2. Joints: Grooved mechanical couplings meeting ASTM F1476. Victaulic or approved equal.
a. Housing Clamps: ASTM A395 and ASTM A536 ductile iron cast with offsetting, angle-pattern bolt pads, copper-colored enamel coated, compatible with copper tubing sizes, to engage and lock designed to permit some angular deflection, contraction, and expansion.
b. Gasket: Grade “EHP” EPDM.
c. Accessories: Steel bolts, nuts, and washers.
d. Design: “Installation Ready” designed for direct ‘stab’ installation onto roll grooved copper tube without prior field disassembly and no loose parts. Victaulic Style 607 QuickVic™.

2.3 TRAP PRIMER PIPING

A. Copper Tubing: ½” Type L soft annealed seamless, ASTM B88
1. Fittings: Flared compression.

B. PEX: ½” Uponor, Viega or approved equal
1. PEX-a (Engel-Method Crosslinked Polyethylene) Piping: NSF 61, ASTM F 876 and F877.

2.4 PRESSURE GAUGES

A. Manufacturers: Marsh, Trerice, Weiss or approved equal.

B. Gauge: Rotary stainless steel movement, 316 stainless steel socket, front calibration adjustment, black scale on white background. ASME B40.1. Trerice 700.
1. Case: 304 stainless steel
2. Bourdon Tube and wetted parts: 316 stainless steel.
3. Dial Size: 4 inch diameter within 7' of floor, 6 inch diameter over 7'.
4. Mid-Scale Accuracy: 1/2 percent.
5. Scale: PSI.

2.5 PRESSURE GAUGE TAPS

A. Needle Valve: 316 stainless steel, 1/4 inch NPT for minimum 300 psi. Trerice 735.

B. Pulsation Damper: 316 stainless steel, 1/4 inch NPT connections. Trerice 870

C. Pressure Snubber: 316 stainless steel, 1/4 inch NPT connections. Trerice 872

D. Siphon: 316 stainless steel, 1/4 inch NPT angle or straight pattern. Trerice 885.

2.6 STEM TYPE THERMOMETERS

A. Manufacturers: Marsh, Trerice, Weiss or approved equal.

B. Thermometer: Blue appearing organic, lens front tube, cast aluminum case with epoxy finish, adjustable angle. ASTM E1. Trerice AX/BX.
1. Size: 7-inch scale within 7' of floor, 9-inch scale mounted over 7'.
2. Window: Clear.
3. Stem: 304SS, 3/4 inch NPT.
4. Accuracy: 2 percent.
5. Calibration: Degrees F.

2.7 AUTOMATIC FLOW BALANCING VALVE

A. Manufacturers: Caleffi 127, Nibco Flo-Boss or approved equal.

B. Construction: Low-lead brass body, anti-scale polymer flow cartridge, stainless steel spring, EPDM seals. 200 psi max working pressure. 200 F max temperature.

C. Control: Working pressure ranges 2-14 psid or 2-32 psid for flows from 0.5 gpm to 5 gpm.

2.8 STRAINERS

A. Manufacturers: Apollo/Conbraco, Metraflex, Titan, Nibco or approved equal.

B. 4 inch and Smaller: Threaded or Solder, 400 PSI CWP, lead-free bronze body, Y-pattern with 20 mesh stainless steel perforated screen. Apollo 59LF.

2.9 REDUCED PRESSURE BACKFLOW PREVENTERS (RPBA)

A. Manufacturers: Watts or equal by Apollo/Conbraco, Wilkens or approved equal. Must be listed as acceptable by the State of Washington Cross Connection Manual.

B. 2 inches and Smaller: Lead-Free. Comply with ASSE 1013. Cast copper silicone body with internal pressure differential relief valve located between two positive seating captured spring check valves, inlet Y-strainer, inlet and outlet shutoff ball valves, ball valve test cocks, replaceable polymer seats and silicone seat discs, air gap drain fitting, 175 psi working pressure, 33-180 F operating temperature range. Watts model LF919.

2.10 WATER HAMMER ARRESTORS

A. Manufacturers: Wade, PPP or approved equal.

B. ASSE 1010; stainless steel or copper construction, pre-charged, bellows or piston type sized in accordance with PDI WH-201.

2.11 TEMPERING VALVE (EMERGENCY)

A. Manufacturers: Haws, Lawler, Powers, Acorn or approved equal.

B. General: Prepackaged, fully engineered and tested system for providing tempered water to emergency showers and/or eyewashes. Mixing valve to close on cold water failure and bypass cold water on hot water failure. Haws TWBS.EWE, TWBS.SHE

C. Construction: NSF 61 Lead-Free brass

D. Assembly: Valve and piping assembly with wall bracket, thermostatic mixing valve, high temperature limit valve, bypass valve, outlet temperature gauge with stainless steel stem, pipe unions. Certified to ASSE 1071 standard.

2.12 TEMPERING VALVE (PUBLIC LAV)

A. Manufacturers: Symmons, Leonard, Powers, Acorn or approved equal.

B. General: Lead-Free brass and bronze body with brass and stainless steel flow control components with check stops, vandal resistant lockable handle, rough [bronze] [chrome] finish. Certified to ASSE 1070 standard.

PART 3 EXECUTION

3.1 PREPARATION

A. Ream pipe and tube ends. Remove burrs. Bevel or groove plain end ferrous pipe.

B. Remove scale and dirt, on inside and outside, before assembly.

C. Prepare piping connections to equipment with groove couplings, flanges or unions.

D. Keep open ends of pipe free from scale and dirt. Protect open ends with temporary plugs or caps.

3.2 INSTALLATION - BURIED PIPING SYSTEMS

A. Verify connection to existing piping system size, location, and invert are as indicated on Drawings.

B. Provide connections to site mains as indicated on drawings.

C. Grade piping at 1/4” per foot where possible, but in no case less than 1/8” per foot. Install all main vertical soil and waste stacks with provisions for expansion and extend full size to roof line as vents.

D. Backfill trenching with pea-gravel if available at site for other purposes. If pea-gravel is unavailable, native soil may be used for backfill if all the following conditions are met.
1. All broken concrete and sharp stones (+1” dia.) to be removed from backfill soil.
2. All large stones (3’ dia. or bigger) to be removed from backfill soil.
3. Piping shall be bedded on min. 2” thickness of replaced “rock free” soil and then checked for grade.

E. Establish elevations of buried piping with not less than 3 ft of cover.

F. Establish minimum separation from other services piping in accordance with Code.

G. Route pipe in straight line.

H. Install pipe to allow for expansion and contraction without stressing pipe or joints.

I. Install plastic ribbon tape continuous over top of pipe.

J. Install trace wire continuous over top of pipe.

3.3 INSTALLATION - ABOVE GROUND PIPING

A. Route piping in orderly manner and maintain gradient. Route parallel and perpendicular to walls.

B. Install piping to maintain headroom without interfering with use of space or taking more space than necessary.

C. Group piping whenever practical at common elevations.

D. Install piping on interior side of building insulation.

E. Provide heat tape for all piping in unheated areas.

F. Sleeve pipe passing through partitions, walls and floors.

G. Install piping to allow for expansion and contraction without stressing pipe, joints, or connected equipment.

H. Protection: Where piping, other than cast iron or steel, is installed in a concealed location through holes or notches in framing (i.e. studs, joists, rafters, etc.), less than 1-1/2 from framing edge, provide shield plates. Shield plates shall be 16 gauge steel and cover the piping area within framing plus 2” on each side along framing.

I. Provide clearance in hangers and from structure and other equipment for installation of insulation and access to valves and fittings. Refer to Section 22 07 00.

J. Grooved Joints: Install in accordance with the manufacturer's (Victaulic) guidelines and recommendations. The gasket style and elastomeric material (grade) shall be verified as suitable for the intended service as specified. Grooved end shall be clean and free from indentations, projections, and roll marks in the area from pipe end to groove for proper gasket sealing. A factory-trained field representative shall provide on-site training for contractor's field personnel in the proper use of grooving tools and installation of grooved piping products. Factory-trained representative shall periodically review the product installation. Contractor shall remove and replace any improperly installed products.

K. Provide access panel where valves and fittings are not accessible.

L. Install non-conducting dielectric connections wherever jointing dissimilar metals.

M. Slope piping and arrange systems to drain at low points. Provide hose bibb if low point is not at a plumbing fixture.

N. Protect piping systems from entry of foreign materials by temporary covers, completing sections of the Work, and isolating parts of completed system.

O. Insulate piping. Refer to Section 22 07 00.

P. Install pipe identification in accordance with Section 22 05 00.

3.4 INSTALLATION - DOMESTIC WATER PIPING SYSTEMS

A. Install domestic water piping system in accordance with ASME B31.9.

B. Grade piping to drain at low points. Provide hose bibb if low point is not at plumbing fixture.

C. Install water piping on interior side of building insulation. Provide heat tape for all piping in unheated areas.

D. Install water hammer arrestors on hot and cold water of each fixture group (e.g.: one arrestor may serve each service to a toilet). Select unit sizes and install in accord with PDI Standard WH-201.

3.5 VALVES

A. Use ball valves for up to 4” piping. Gate valves are not approved for use up to 4” piping. Gate valves are for 6” piping and larger only.

B. Gate valves which are part of a valve assembly are acceptable.

3.6 INSTALLATION - THERMOMETERS AND GAUGES

A. Install pressure gauges on each side of domestic water service assembly (i.e double check, PRV, etc.).

B. Install one pressure gauge for each pump, locate taps before strainers and on suction and discharge of pump; pipe to gauge.

C. Install gauge taps in piping.

D. Install pressure gauges with pulsation dampers. Provide needle valve or ball valve to isolate each gauge.

E. Install thermometers in piping systems in sockets in short couplings. Enlarge pipes smaller than 2-1/2 inches for installation of thermometer sockets. Allow clearance from insulation.

F. Provide instruments with scale ranges selected according to service with largest appropriate scale.

G. Install gauges and thermometers in locations where they are easily read from normal operating level. Install vertical to 45 degrees off vertical.

H. Adjust gauges and thermometers to final angle, clean windows and lenses, and calibrate to zero.

3.7 INSTALLATION - SERVICE CONNECTIONS

A. Provide new water service complete with approved double check back-flow preventer, pressure reducing valve, by-pass valves, pressure gauges and strainer.

B. Provide sleeve in wall for service main and support at wall with reinforced-concrete bridge. Caulk enlarged sleeve and make watertight with pliable material. Anchor service main inside to concrete wall.

C. Provide 18 gauge galvanized sheet metal sleeve around service main to 6 inch above floor and 6 feet minimum below grade. Size for minimum of 2 inches of loose batt insulation stuffing.

3.8 FIELD QUALITY CONTROL

A. Test domestic water piping system at 100 psig minimum for a period of not less than 4 hours.

3.9 CLEANING

A. Flush system with water for minimum of 60 minutes to remove all dirt and foreign materials. Use minimum of 80 psi flushing pressure.

B. Inject disinfectant, free chlorine in liquid, powder, tablet or gas form, throughout system to obtain residual from 50 to 80 mg/L.

C. Bleed water from outlets to obtain distribution and test for disinfectant residual at a minimum of 15 percent of outlets.

D. Maintain disinfectant in system for 24 hours.

E. Flush disinfectant from system until residual concentration is equal to incoming water or 1.0 mg/L.

END OF SECTION

SECTION 22 13 00 - FACILITY SANITARY SEWERAGE

PART 1 GENERAL

1.1 SUMMARY

A. Section Includes:
1. Sanitary sewer piping, buried within 5 feet of building.
2. Sanitary sewer piping, above grade.
3. Condensate drains
4. Floor drains.
5. Trench drains.
6. Floor sinks.
7. Cleanouts.

PART 2 PRODUCTS

2.1 SANITARY SEWER PIPING, BURIED WITHIN 5 FEET OF BUILDING

A. Cast Iron Pipe & Fittings: ASTM A888, CISPI 301, hub-less. Made in USA by AB&I, Charlotte or Tyler marked with collective trademark of the Cast Iron Soil Pipe Institute (CISPI) and listed by NSF International.
1. Fittings: ASME B16.45 or ASSE 1043, long pattern cast iron, hubless.
2. Joints: Heavy-Duty, Shielded, Stainless-Steel coupling with all type 304 stainless steel shield and band assembly, 80 in/lbs worm drive. ASTM C-564 Neoprene gasket. CISPI 310 and certified by NSF international. Minimum 4 clamps up to 4”, 6 clamps for 5” and larger. Husky SD (Super-Duty) 4000, Clamp-All 125, Ideal Tridon Super Heavy-Duty, Mifab QXHUB Heavy Duty or approved equal.

B. ABS Pipe: Schedule 40, ABS material, DWV, Cellular Core, bell and spigot style solvent sealed ends. NSF Standard 14, ASTM F628, ASTM D3965.
1. Fittings: ABS, DWV, ASTM D2661.
2. Joints: Solvent weld. ASTM D2235.

C. PVC Pipe: Schedule 40 solid wall PVC, bell and spigot solvent sealed ends. NSF Standard 14, ASTM D1785, ASTM D1784.
1. Fittings: Schedule 40, PVC, ASTM D2665.
2. Joints: Solvent weld with ASTM D2564 solvent cement.

2.2 SANITARY SEWER PIPING, ABOVE GRADE

A. Cast Iron Pipe & Fittings: ASTM A888, CISPI 301, hub-less. Made in USA by AB&I, Charlotte or Tyler marked with collective trademark of the Cast Iron Soil Pipe Institute (CISPI) and listed by NSF International.
1. Fittings: ASME B16.45 or ASSE 1043, long pattern cast iron, hubless.
2. Joints: Heavy-Duty, Shielded, Stainless-Steel coupling with all type 304 stainless steel shield and band assembly, 80 in/lbs worm drive. ASTM C-564 Neoprene gasket. CISPI 310 and certified by NSF international. Minimum 4 clamps up to 4”, 6 clamps for 5” and larger. Husky SD (Super-Duty) 4000, Clamp-All 125, Ideal Tridon Super Heavy-Duty, Mifab QXHUB Heavy Duty or approved equal.

B. Copper Tube (Use only for short piping sections where dimensional constraints require thin wall pipe): ASTM B306 DWV.

1. Fittings: Long Pattern, ASME B16.23, cast bronze, or ASME B16.29, wrought copper.
2. Joints: Solder, lead free, ASTM B32, 95-5 tin-antimony, or tin and silver.

C. Steel Pipe (water closet connections only): Schedule 40, galvanized. ASTM A53.
1. Fittings: Cast Iron, ASME B16.4, threaded fittings.
2. Joints: Threaded.

D. **[VENT ONLY]** ABS Pipe: Schedule 40, ABS, DWV, Cellular Core, bell and spigot style solvent sealed ends (If approved by local authorities). NSF Standard 14, ASTM F628, ASTM D3965. **Not for use in air plenum.**
1. Fittings: ABS, DWV, ASTM D2661.
2. Joints: Solvent weld. ASTM D2235.

E. **[VENT ONLY]** PVC Pipe: Schedule 40 solid wall PVC, bell and spigot solvent sealed ends (If approved by local authorities). NSF Standard 14, ASTM D1785, ASTM D1784. **Not for use in air plenum.**
1. Fittings: Schedule 40, PVC, ASTM D2665.
2. Joints: Solvent weld with ASTM D2564 solvent cement.

2.3 NO-HUB TRANSITION COUPLING FOR JOINING CAST IRON AND PVC PIPE

A. Coupling shall be Tested and Certified to ASTM C 1460 and be constructed with type 304 stainless steel shield, thickness 0.015, gasket material to meet ASTM C564, 1-1/2" - 4" will be 3" wide with four (4) 304 stainless steel bands and 6" - 10" will be 4" wide with six (6) 304 stainless steel bands and 3/8" 305 stainless steel hex head screws torqued to 80 inch pounds. Husky SD 4000 PVC x CI or approved equal.

2.4 EQUIPMENT DRAINS (CONDENSATE)

A. Copper Tubing: Type L, hard drawn. ASTM B88.
1. Fittings: ASME B16.18, cast brass, or ASME B16.22 solder wrought copper.
2. Joints: Solder, lead free, ASTM B32, 95-5 tin-antimony, or tin and silver, with melting range 430 to 535 degrees F.

B. CPVC Pipe: Schedule 40. ASTM D2846. **Not for use in air plenum.**
1. Fittings: Schedule 40 CPVC. ASTM D2846.
2. Joints: Solvent weld with ASTM F493 solvent cement. ASTM D2846.

2.5 FLOOR DRAINS

A. Manufacturers: Zurn, Josam, J.R. Smith, Wade or approved equal.

B. General Service: Cast iron body, membrane clamp, adjustable collar, polished nickel bronze strainer, trap primer connection. Provide funnel where scheduled.

C. Garage: Square top heavy duty parking deck drain with coated cast iron body, gasketed drain support flange, heavy duty slotted grate, underdeck clamp.

2.6 TRENCH DRAIN

A. Manufacturers: Zurn, J.R. Smith, Aco or approved equal.

B. 6” wide, sloped modular channel sections with interlocking end and radiused bottom, HDPE, extra heavy duty frame with anchor studs and grate lockdown, ductile iron cast bar grate with H-20 rating.

2.7 FLOOR SINKS

A. Manufacturers: Zurn, Josam, J.R. Smith, Wade or approved equal.

B. Cast iron body with white acid resisting porcelain enamel coating on body and grate, sump dome strainer, trap primer connection.

2.8 CLEANOUTS

A. Manufacturers: Zurn, J.R. Smith, Josam, Wade or approved equal.

B. Exterior or interior vehicle areas: Heavy-Duty round coated cast iron body and cover with bronze plug.

C. Exterior Surfaced Areas: Round cast nickel bronze access frame with bronze gasket threaded plug and non-skid cover.

D. Exterior Unsurfaced Areas: Line type with lacquered cast iron body and bronze gasket threaded plug.

E. Interior Finished Floor Areas: Type of ferrule, top and cover as required for the type of floor construction, finish surface and traffic conditions. Cleanout construction material to match waste piping with anchor flange, threaded top assembly, and round scored cover with gasket in service areas and round depressed cover with gasket to accept floor finish in finished floor areas. For carpet provide marker. For cast iron construction provide bronze gasket threaded plug.

F. Interior Finished Wall Areas: Cleanout construction material to match waste piping, line type with round gasket threaded plug, and round stainless steel access cover secured with machine screw. For cast iron construction provide bronze gasket threaded plug.

G. Interior Unfinished Accessible Areas: Threaded type. Provide bolted stack cleanouts on vertical waste stacks.

2.9 FLASHING AND COUNTERFLASHING

A. 3lb. lead soldered joints and seams, 24 x 24 base pad and counterflashed into pipe.

2.10 TRAP PRIMER

A. Manufacturers: PPP, Wade, J.R. Smith, Josam, Watts, Zurn or approved equal.

B. Construction: Automatic, bronze body, integral vacuum breaker.

C. See 221100 for trap primer piping.

2.11 TRAP PRIMER TAIL PIECE

A. Manufacturers: PPP or approved equal.

B. Construction: 1-1/2” tail piece trap primer assembly with ½” stainless steel flexible priming water line and chrome plated escutcheon.

C. See 221100 for trap primer piping.

2.12 AIR GAP FITTING

A. Manufacturers: Zurn Z-1025 or equal by J.R. Smith or approved equal.

B. Construction: Inline, fixed air gap, coated cast iron.

PART 3 EXECUTION

3.1 PREPARATION

A. Remove scale and dirt, on inside and outside, before assembly.

B. Prepare piping connections to equipment with flanges or unions.

C. Verify and provide required extensions, clamps and drain styles to match floor construction and finish.

3.2 INSTALLATION

A. Coordinate location of floor drains in mechanical spaces with mechanical contractor equipment layout.

B. Protect floor drain strainer during construction.

C. Traps:
1. Install trap seal maintenance devices only where called for on plans or approved by engineer; at all other drain locations provide automatic trap primers.
2. Install automatic trap primers throughout at site drains and floor drains except those located in showers or provided with trap seal maintenance devices.
3. Provide access panels for automatic trap primers.
4. Adjust automatic trap primer pressure setting for proper operation.

D. Align square floor drains with floor tiles or parallel with walls.

E. Install interceptors with top flush with adjacent surface or grade. Provide quantity and size of vents as indicated in manufacturer's literature. Terminate vents minimum 10 feet above grade or through roof at a location determined by the architect.

3.3 CONDENSATE PIPING

A. Provide condensate piping for air-conditioning and high-efficiency gas fired equipment. Coordinate quantity required with mechanical contractor. Provide minimum 3" deep p-trap at equipment.

B. Determine best routing to nearest indirect waste using minimum 3/4" piping with minimum 1/8" per foot slope. Acceptable indirect waste locations are service sink, laundry sink, floor drain or air gap fitting into waste pipe. Provide open drain box or access panel for air gap fitting as approved by local authority. Discharge onto roof or at grade is acceptable if allowed by local code, provide splash block.

C. If proper slope cannot be achieved advise Mechanical Contractor to provide condensate pump.

3.4 INSTALLATION - BURIED PIPING SYSTEMS

A. Verify connection to existing piping system size, location, and invert are as indicated on Drawings.

B. Provide connections to site mains as indicated on drawings.

C. Grade piping at 1/4” per foot where possible, but in no case less than 1/8” per foot. Install all main vertical soil and waste stacks with provisions for expansion and extend full size to roof line as vents.

D. Install buried ABS piping per ASTM D2321 and ASTM F1668.

E. Backfill trenching with pea-gravel if available at site for other purposes. If pea-gravel is unavailable, native soil may be used for backfill if all the following conditions are met.
1. All broken concrete and sharp stones (+1” dia.) to be removed from backfill soil.
2. All large stones (3’ dia. or bigger) to be removed from backfill soil.
3. Piping shall be bedded on min. 2” thickness of replaced “rock free” soil and then checked for grade.

F. Establish elevations of buried piping with not less than 3 ft of cover.

G. Establish minimum separation from other services piping in accordance with Code.

H. Provide piping layout to satisfy the UPC requirements for suds relief.

I. Route pipe in straight line.

J. Install pipe to allow for expansion and contraction without stressing pipe or joints.

K. Install plastic ribbon tape continuous over top of pipe.

L. Install trace wire continuous over top of pipe.

3.5 INSTALLATION - ABOVE GROUND PIPING

A. Route piping in orderly manner and maintain gradient at 1/4” per foot where possible, but in no case less than 1/8” per foot. Route parallel and perpendicular to walls.

B. Install piping to maintain headroom without interfering with use of space or taking more space than necessary.

C. Group piping whenever practical at common elevations.

D. Install piping on interior side of building insulation.

E. Provide heat tape for all p-traps in unheated areas.

F. Sleeve pipe passing through partitions, walls and floors.

G. Install piping to allow for expansion and contraction without stressing pipe, joints, or connected equipment.

H. Protection: Where piping, other than cast iron or steel, is installed in a concealed location through holes or notches in framing (i.e. studs, joists, rafters, etc.), less than 1-1/2 from

framing edge, provide shield plates. Shield plates shall be 16 gauge steel and cover the piping area within framing plus 2” on each side along framing.

I. Provide clearance in hangers and from structure and other equipment for installation of insulation and access to valves and fittings.

J. Provide access panel where valves and fittings are not accessible.

K. Install non-conducting dielectric connections wherever jointing dissimilar metals.

L. Establish invert elevations, slopes for drainage to 1/4 inch per foot minimum. Provide 1/8 inch per foot only where necessary and allowed by local jurisdiction. Maintain gradients.

M. Provide piping layout to satisfy the UPC requirements for suds relief.

N. Protect piping systems from entry of foreign materials by temporary covers, completing sections of the Work, and isolating parts of completed system.

O. Install piping penetrating roofed areas to maintain integrity of roof assembly.

P. Insulate piping. Refer to Section 22 07 00.

Q. Install pipe identification in accordance with Section 22 05 00.

3.6 INSTALLATION - SANITARY WASTE AND VENT SYSTEMS

A. Install sanitary waste and vent piping systems in accordance with ASME B31.9 and local plumbing code.

B. Support cast iron drainage piping at every joint.

C. Flash and counterflash. Install vents passing through roof with roof flashing and counterflashing assemblies. 3lb. lead soldered joints and seams, 24 x 24 base pad and counterflashed into pipe.

D. Install automatic trap primers throughout at floor drains except those located in showers. Provide access panel for trap primers.

E. Provide piping layout to satisfy the UPC requirements for suds relief.

F. Provide cleanouts every 50 feet and install at all locations required by code and to permit cleaning of all waste piping. Provide cleanouts full size of pipe, but no larger than 4”. Coordinate with Architect when cleanouts are located in finished rooms. Install cleanout threads with graphite. Locate cleanouts to clear cabinet work and to be easily accessible.

3.7 FIELD QUALITY CONTROL

A. Obtain written approval of local Plumbing Authority prior to covering or concealing any work.

B. Test sanitary waste and vent piping system to hydrostatic test of 10 feet head of water.

END OF SECTION

SECTION 22 26 00 - LIQUID PETROLEUM GAS SYSTEMS

PART 1 GENERAL

1.1 SUMMARY

A. Section Includes:
1. LPG piping buried within 5 feet of building.
2. LPG piping above grade.
3. Valves & Strainers.

1.2 SYSTEM DESCRIPTION

A. Where more than one piping system material is specified, provide compatible system components and joints. Use non-conducting dielectric connections when joining dissimilar metals in systems.

B. Provide flanges, unions, or couplings at locations requiring servicing. Use unions, flanges, or couplings downstream of valves and at equipment connections. Do not use direct welded or threaded connections to valves, equipment.

C. Use ball valves for shut-off and to isolate equipment, part of systems, or vertical risers.

1.3 DEFINITIONS

A. Where designation LPG is used, it is abbreviation for Liquefied Petroleum Gas, most commonly Propane.

1.4 QUALITY ASSURANCE

A. Perform LPG Work in accordance with NFPA 58.

B. Perform work in accordance with applicable code. Contractor shall coordinate all clearance requirements with local gas company prior to locating the tank pad and piping into the building. Gas company requirements may be more strict than NFPA 58.

C. Furnish shutoff valves complying with ASME B16.33 or ANSI Z21.15.

PART 2 PRODUCTS

2.1 LPG PIPING, BURIED WITHIN 5 FEET OF BUILDING

A. Steel Pipe: ASTM A53, Schedule 40 black, seamless. Manufactured in the USA.
1. Fittings: ASTM A234, forged steel welding type.
2. Joints: ASME B31.9, welded.
3. Jacket: AWWA C105 polyethylene jacket or double layer, half-lapped 10 mil polyethylene tape.

2.2 LPG PIPING, ABOVE GRADE

A. Steel Pipe: ASTM A53, Schedule 40 black, seamless. Manufactured in the USA.
1. Fittings: ASME B16.3, malleable iron, or ASTM A234, forged steel welding type.
2. Joints: 2 inch and smaller pipe - Threaded.
3. Joints: 2-1/2 inches and larger pipe – welded.

B. Steel Pipe: ASTM A53, Schedule 40 black, seamless. Manufactured in the USA.
   1. Fittings: Viega MegaPress G, ANSI LC4-2012, zinc and nickel coating, HNBR sealing element, 420 stainless steel grip ring, 304 stainless steel separator ring and smart connect feature.
   2. Joints: 4 inch and smaller pipe - Viega MegaPress G Ridgid tool press.

C. Copper Tubing: ASTM B88, Type L annealed.
   1. Fittings: ASME B16.26, cast bronze, compression type.
   2. Joints: Flared.

2.3 BALL VALVES

A. Manufacturers: Nibco, Stockham, Milwaukee, or approved equal.

B. 1/4 inch to 1 inch: MSS SP 110, Class 125, two piece, threaded ends, bronze body, chrome plated bronze ball, reinforced teflon seats, blow-out proof stem, lever handle, UL 842 listed for flammable liquids and LPG, full port. (Nibco T585-70-UL)

C. 1-1/4 inch to 3 inch: MSS SP 110, Class 125, two piece, threaded ends, bronze body, chrome plated bronze ball, reinforced teflon seats, blow-out proof stem, lever handle, UL 842 listed for flammable liquids and LPG, conventional port. (Nibco T580-70-UL)

2.4 STRAINERS

A. 2 inch and Smaller: Screwed brass or iron body for 175 psig working pressure, Y pattern with 1/32 inch stainless steel perforated screen.

PART 3 EXECUTION

3.1 LPG SERVICE AND DISTRIBUTION

A. Refer to plans for LPG tank location and coordinate with the gas company for installation and size. Pay all charges necessary for complete installation.

3.2 PREPARATION

A. Ream pipe and tube ends. Remove burrs. Bevel plain end ferrous pipe.

B. Remove scale and dirt, on inside and outside of pipe, before assembly.

C. Prepare piping connections to equipment with flanges or unions.

3.3 INSTALLATION - BURIED PIPING SYSTEMS

A. Install LPG piping in accordance with NFPA 58.

B. Verify connection to existing piping system size, location, and invert.

C. Establish elevations of buried piping with not less than 2 ft of cover.

D. Establish minimum separation from other services piping in accordance with code.

E. Install pipe on prepared bedding.

F. Route pipe in straight line.

G. Install pipe to allow for expansion and contraction without stressing pipe or joints.

3.4 INSTALLATION - ABOVE GROUND PIPING SYSTEMS

A. Install LPG piping in accordance with NFPA 58.

B. Provide non-conducting dielectric connections wherever jointing dissimilar metals.

C. Grade horizontal pipe not less than ¼" in 15 feet.

D. Route piping in orderly manner and to conserve building space and not interfere with use of space.

E. Group piping whenever practical at common elevations.

F. Provide 6" long drip leg at bottom of vertical pipe.

G. Take from top or side of horizontal pipe.

H. Install piping to allow for expansion and contraction without stressing pipe, joints, or connected equipment.

I. Sleeve pipe passing through partitions, walls and floors.

J. Install firestopping at fire rated construction perimeters and openings containing penetrating sleeves and piping.

K. Provide clearance for access to valves and fittings.

L. Provide access doors where valves and fittings are not exposed.

M. Do not embed any building service low pressure pipe in concrete, in masonry, or below grade. Install such pipe in Schedule 40 welded pipe sleeves and vent to roof.

N. Provide support for utility meters in accordance with requirements of utility company.

O. Prepare pipe, fittings, supports, and accessories not pre-finished, ready for finish painting.

P. Install identification on piping systems including underground piping.

Q. Install valves with stems upright or horizontal, not inverted.

R. Protect piping systems from entry of foreign materials by temporary covers, completing sections of the Work, and isolating parts of completed system.

3.5 INSTALLATION – EQUIPMENT CONNECTION

A. Provide shutoff valve and flexible pipe at connections to all equipment. Use sufficient flexible pipe length to allow for 4" of movement.

B. Connect piping to unit, full size of unit gas train inlet. Arrange piping with clearance for burner and equipment service.

C. Provide drip leg.

D. Provide strainer.

3.6 FIELD QUALITY CONTROL

A. Pressure test LPG piping in accordance with NFPA 58.

B. Subject pipe to air pressure of 60 psig for 30 minutes with no perceptible drop in pressure.

C. When pressure tests do not meet specified requirements, remove defective work, replace and retest.

END OF SECTION

SECTION 22 40 00 - PLUMBING FIXTURES

PART 1 GENERAL

1.1 SUMMARY

A. Section Includes:
1. General Plumbing Fixtures: Water closets, Urinals, Lavatories, Sinks, Service sinks, Bathtubs, Showers, Drinking fountains, Electric water coolers.
2. Faucets and valves
3. Emergency Fixtures: Emergency showers, Emergency Eye and Face Wash.
4. Hose bibbs & Hydrants.
5. Accessories.

1.2 SCOPE

A. This section includes all plumbing fixtures, trim and installation, to include owner furnished equipment.

1.3 REQUIREMENTS

A. All china fixtures shall be white or manufacturer's standard unless otherwise indicated.

B. Ensure that that all china fixtures install in a room or area are the exact same color and hue, especially if from different manufacturers.

C. Fixtures by type and material shall be of the same manufacturer except when scheduled or approved otherwise.

D. Fixtures shall be designed or equipped to meet the following water use efficiency standards:

1.	Water closets (tank or flush valve)	1.28 GPF
2.	Urinals	0.125 GPF
3.	Shower heads	1.8 GPM (WaterSense)
4.	Lavatory faucets (Private)	0.8 - 1.2 GPM
5.	Lavatory faucets (Public)	0.5 GPM
6.	Kitchen Sink faucets	1.8 GPM
7.	Sink faucets	2.2 GPM
8.	Metered faucets	0.25 GPC
9.	Pre-Rise Spray Valve	1.6 GPM

PART 2 PRODUCTS

2.1 SINKS

A. Manufacturers: Elkay, Just, Acorn or approved equal.

B. Single Compartment: Seamless 18 gauge. Type 304 stainless steel, self-rimming, radius corners, sound deadening undercoat.

C. Double Compartment: Seamless 18 gauge. Type 304 stainless steel, self-rimming, radius corners, sound deadening undercoat.

D. Bar: Seamless 18 gauge. Type 304 stainless steel, self-rimming, radius corners, sound deadening undercoat.

E. Scullery: 14 gauge stainless steel, welded construction ground smooth, 1/4” radius corners, wall and floor mounted with tubular stainless steel legs, 8” high full length backsplash with 45 deg. slope top, 1-1/2” wide inward slopping top channel rims, integral drainboards sloped to drain, drilled for faucet and drain outlets, satin finish.

2.2 FAUCET, SINK

A. Manufacturers: Chicago, Delta HDF, Symmons or approved equal.

B. Swing Spout:
1. Single Handle: Polished chrome plated cast brass, deck mount, metal lever handle, ceramic mixing cartridge, temperature limit stop. Spout length, drain and hole spacing as scheduled.

C. Gooseneck:
1. Dual Handle: Polished chrome plated cast brass, deck mount, metal indexed wristblade handles. Spout height, reach, drain and hole spacing as scheduled.

2.3 FAUCET, SERVICE

A. Manufacturers: T&S Brass, Chicago, Delta HDF, Symmons, or approved equal.

B. Wall Mount: Chrome plated brass, vacuum breaker spout with pail hook and wall brace, indexed level handles, hose thread outlet, adjustable supply arms, integral stops and supply check valves.

2.4 FAUCET, DECON

A. Manufacturers: T&S or approved equal.

B. Polished chrome plated brass, backsplash mount, lever handles with spring checks & color coded indexes, 14” swing spout, pre-rise spray riser with wall bracket, finger hook, spray valve and stainless spring wound rubber hose.

2.5 EMERGENCY EYE AND FACE WASH

A. Manufacturers: Haws, Bradley, Guardian, Speakman, Acorn or approved equal.

B. Wall mounted eye/face wash with 11” stainless steel bowl, wall bracket, twin soft anti-surge eyewash heads, stainless steel face spray ring, hand flag control, chrome plated waste tailpiece and trap, dust cover, brass stay-open ball valve, in-line 50x50 mesh brass strainer, CSA certified to meet ANSI Z358.1. Include universal emergency signage 8”x11”.

2.6 HOSE BIBBS

A. Manufacturers: Woodford, Zurn, JR Smith or approved equal.

B. Interior: Bronze or brass with integral mounting flange, automatic draining, anti-siphon vacuum breaker, 3/4” hose thread, wheel handle.

C. Exterior (Freeze Proof): Automatic draining, freezeless, hose connection backflow protection, two check valves, 3/4” hose thread, loose key handle, wall clamp.

2.7 HOSE STATION

A. Manufacturers: Leonard or approved equal.

B. Hot & Cold: Panel-type recessed stainless steel cabinet with stainless steel cover, inlets with stops, check valves and color coded handles, outlet dial thermometer, vacuum breaker hose connection, stainless steel hose rack, [10] feet of 3/4" heavy duty EPDM hose with industrial rubber coated bronze nozzle.

2.8 FIXTURE SUPPLIES

A. Manufacturers: Brass Craft, McGuire, Chicago or approved equal.

B. Chrome plated all brass angle stops with brass stems (no plastic). Fixed key metal handle and chrome plated escutcheon. Chrome plated copper flexible supplies for exposed connections, braided supplies acceptable where concealed. Provide stop and supply type as applicable to specific fixtures. Supply shall be marked with manufacturer's name and comply with ANSI NSF 61 "No Lead".

2.9 TRAPS

A. Manufacturers: Brass Craft, Dearborn Brass, McGuire or approved equal.

B. Adjustable type, polished chrome plated cast brass, 17 gauge, with escutcheon. Provide type as applicable to specific fixture installation. PVC acceptable only where concealed.

2.10 LAVATORY INSULATION KIT

A. Manufacturers: Truebro, Plumberex, McGuire or approved equal.

B. Where lavatories or sinks have exposed traps or supplies furnish the following for ADA compliance: Safety Covers conforming to ANSI A177.1 and consisting of insulation kit of molded closed cell vinyl construction, 3/16 inch thick, white color, for insulating tailpiece, P-trap, valves, and supply piping. Furnish with weep hole and angle valve access covers, antimicrobial, with flush reusable fasteners.

PART 3 EXECUTION

3.1 EXAMINATION

A. Verify walls and floor finishes are prepared and ready for installation of fixtures.

B. Verify electric power is available and of correct characteristics.

C. For all lavatories and sinks verify required number of holes and hole spacing before ordering.

D. Verify finish floor elevation and flooring material for shower stall installation.

3.2 PREPARATION

A. Rough-in fixture piping connections in accordance with minimum sizes indicated in fixture rough-in schedule for particular fixtures and in accordance with manufacturer's details.

B. Locate fixtures in accordance with architectural drawings, details on structural drawings and/or Engineer's direction in field. Mount ADA fixtures according to dimensions on architectural drawings.

C. If drain, tailpiece, strainer or other accessories are not furnished by fixture manufacturer then provide accessories by Brass Craft or approved equal.

D. Provide vandal proof features on faucets, aerators, bubblers and pop-up waste assemblies on fixtures in public areas.

3.3 INSTALLATION

A. Install shut-off valves on water lines servicing a fixture group.

B. Support piping at stop, valve or flush valve.

C. Align fixtures and equipment installed in accord with architectural drawings.

D. Seal fixtures to wall and floor surfaces with silicon sealant, color to match fixture.

E. Solidly attach water closets to floor with lag screws. Lead flashing is not intended hold fixture in place.

3.4 INTERFACE WITH OTHER PRODUCTS

A. Review millwork shop-drawings. Confirm location and size of fixtures and openings before rough in and ordering.

3.5 ADJUSTING

A. Adjust stops or valves for intended water flow rate to fixtures without splashing, noise, or overflow.

B. Adjust flush lever or valve for intended flow rate and operation.

END OF SECTION

SECTION 23 00 00 - HVAC GENERAL CONDITIONS

PART 1 GENERAL

1.1 GENERAL REQUIREMENTS

A. Conform to General Conditions, Supplementary Conditions, the modifications thereto and Division 01 - General Requirements for all work in Division 23.

1.2 SUMMARY

A. Provide labor, materials and appliances necessary for satisfactory installation of mechanical work ready to operate in strict accordance with these specifications and drawings. Work of Division 23 includes, but is not limited to, that as delineated in the following specification sections:

23 00 00	HVAC General Conditions
23 05 00	Common Work Results for HVAC
23 05 93	Testing, Adjusting and Balancing
23 07 00	HVAC Insulation
23 08 00	Project Commissioning
23 09 00	Instrumentation and Control for HVAC
23 23 00	Refrigerant Piping
23 31 00	HVAC Ducts and Casings
23 33 00	Air Duct Accessories
23 37 00	Air Outlets and Inlets
23 40 00	HVAC Filters
23 72 00	Energy Recovery Units
23 81 26	Split-System Air-Conditioners & Heat Pumps
23 83 23	Electrical Terminal Heating Units

B. Related Sections:
016000 Product Requirements
017419 Construction Waste Management

1.3 CODES AND STANDARDS

A. Conform to following code and agency requirements having jurisdictional authority over mechanical installation.
1. Uniform Plumbing Code (UPC) with local amendments.
2. International Mechanical Code (IMC) with local amendments.

3. International Building Code (IBC) with local amendments.
4. International Fuel Gas Code (IFGC) with local amendments.
5. National Electrical Code (NEC) NFPA 70.
6. Requirements of OSHA and EPA.
7. National Fire Protection Association (NFPA) Codes and Standards.
8. ASME code for construction of pressure vessels.
9. American Gas Association (AGA) Standards.
10. ASTM, ANSI and NEMA standards, as referenced in subsequent sections.
11. Local Sewer District Requirements.
12. Local Water District Requirements.
13. Local Health Department Requirements.
14. Washington State Energy Code.

1.4 PERFORMANCE REQUIREMENTS

A. Firestopping: Conform to International Building Code with local amendments, FM, and UL for fire resistance ratings and surface burning characteristics.

B. Provide vibration isolation on motor driven equipment over 0.5 hp, plus connected piping and ductwork.

C. Provide minimum static deflection of isolators for equipment as follows:
1. 5 hp and less: 1 inch
2. Over 5 hp: 2 inch

1.5 PRODUCT SUBSTITUTIONS

A. Manufacturers and models of equipment and material indicated herein and on drawings are those upon which mechanical design is based. Other manufacturers with products considered equal in general quality may be listed without specific model designation. Manufacturers not listed shall be submitted for approval, see Division 01.

B. Substitutions will be evaluated based on product manufacturer only. Specific product model, specifications, options and accessories will be evaluated during submittals. Approval of a manufacturer substitution does not constitute approval of the submitted product.

C. Any equipment other than the basis of design is considered a substitution.

D. In selecting substitute equipment, the Contractor is responsible for and shall guarantee equal performance and fit. Cost of redesign and all additional costs incurred to accommodate the substituted equipment shall be borne by the Contractor.

E. Unless indicated otherwise, “or approved” may be assumed for all products in Division 23.

1.6 SUBMITTALS

A. Provide one electronic copy of product data submittals for all products listed under “Part 2 Products” of Division 23 and all additional products noted on drawings or required for completion of sequence of operations.

B. Electronic: **All sections of Division 23 shall be submitted together in one complete PDF file with bookmarks for each section. Multi-part submittals will be returned without review.**

1. First Page: Name of Project, Owner, Location & Contracting Company.
2. Index Page: List of specification sections with contents by Tag or item.
3. Bookmarks: Electronic bookmark of each specification section corresponding to listing in index.

C. Clearly indicate on each page the equipment schedule designation (Tag) and/or specification section, as applicable. Indicate selected model and all accessories intended for use.

D. Equipment vendor cover page with contact information shall precede submittal by that vendor.

E. Submitted product information shall include (as applicable) but not be limited to the following information:
1. Product description
2. Manufacturer and model
3. Dimensions
4. Performance Ratings (i.e. capacity, rpm, HP, temperature)
5. Construction Materials
6. Ratings (i.e. UL, ASTM, NEMA, etc)
7. Electrical data
8. Sound level data (corresponding to scheduled values)
9. Vibration Isolation
10. Controls and wiring diagrams
11. Accessories
12. Engineering technical data (i.e. pressure drops, leakage rates, pump curves, fan curves)

F. If requested by Architect or Engineer, submit Manufacturer's Installation Instructions on any equipment, procedures, or certifications so requested.

G. Do no ordering, fabrication or manufacturing of products until return of approved submittals.

1.7 SHOP DRAWINGS

A. The Contractor shall submit drawings and/or diagrams for review and for job coordination in all cases where deviation from the Contract Drawings are contemplated because of job conditions, interference, or substitution of equipment, or when requested by the Engineer for purposes of clarification of the Contractor’s intent.

B. Submit detailed drawings, rough-in sheets, etc., for all special or custom-built items or equipment. Drawings and details under the section shall include (but not be limited to) the following, where applicable to this project:
1. Electrical interlock wiring diagrams.
2. Piping layout plans and interference details.

C. By submission of piping and ductwork shop drawings, the Contractor acknowledges that coordination has been done to ensure that all piping and ductwork fits and that no conflicts exist.

D. The Architect’s review of shop drawings shall not relieve the Contractor of responsibility for deviations from the Contract drawings or specifications, unless he has, in writing, called the attention of the Architect to such deviations at the time of the submission, nor shall it relieve him from responsibility for errors or omission in such shop drawings.

1.8 COMMISSIONING

A. See Section 23 08 00 for roles and responsibilities of commissioning.

B. Provide all necessary commissioning assistance, equipment and documentation as required by the Commissioning Plan.

C. The duty and responsibility for mechanical commissioning work shall be assigned to a specific individual. Inform the General Contractor and Certified Commissioning Professional (CCXP) of the contact information for the person so assigned.

D. Perform corrective actions needed to resolve deficiencies identified during commissioning. Record action taken on commissioning deficiency log.

1.9 COMMISSIONING PLAN

A. The Commissioning Plan shall be submitted with other mechanical submittals.

B. Approval of commissioning plan is required before commencement of work.

1.10 HVAC PERMIT

A. HVAC contractor shall obtain the Mechanical Permit. The Mechanical Permit has been submitted and paid for by the Owner. HVAC contractor is responsible to submit, pay for and obtain any additional permits required.

B. Contractor shall not commence work until permit is obtained. Contractor is solely responsible to ensure that the permit application and any revisions are submitted in a timely manner so as not to impact project schedule.

C. Contractor shall retain services of a third-party structural engineer to provide support, anchoring and seismic calculations for all applicable equipment.

1.11 QUALITY ASSURANCE

A. Perform Work in accordance with ASME B31.9 – Building Services Piping for installation of piping systems and ASME Section IX – Welding and Brazing Qualifications for welding materials and procedures.

B. Perform Work in accordance with the International Mechanical Code including State and local amendments.

C. Provide products requiring electrical connections listed and classified by UL as suitable for purpose specified and indicated.

D. Perform Work in accordance with Washington State Energy Code.

1.12 QUALIFICATIONS

A. Manufacturer: Company specializing in manufacturing products specified in this section with minimum three years' experience.

B. Installer: Company specializing in performing Work of this section with minimum three years' experience.

1.13 SEQUENCING

A. Sequence balancing between completion of systems tested and Date of Substantial Completion.

1.14 DELIVERY, STORAGE, AND HANDLING

A. Accept materials on site in original factory packaging, labeled with manufacturer's identification.

B. Protect all equipment, materials, and insulation from weather, construction traffic, dirt, water, chemicals, and damage by storing in original packaging and under cover. Where original packaging is insufficient, provide additional protection. Maintain protection in place until installation.

C. Inspect all products and materials for damage prior to installation.

D. Protect piping from all entry of foreign materials by providing temporary end caps or closures on piping and fittings. Furnish temporary protective coating on cast iron and steel valves.

E. Protect heat exchangers and tanks with temporary inlet and outlet caps. Maintain caps in place until installation.

F. Protect dampers from damage to operating linkages and blades.

G. Protect materials and finishes during handling and installation to prevent damage.

H. Protect coil fins from crushing and bending by leaving in shipping cases until installation, and by storing indoors. Protect coils from entry of dirt and debris with pipe caps or plugs.

I. Comply with manufacturer's installation instruction for rigging, unloading and transporting units.

J. Comply with contractor’s construction Indoor Air Quality (IAQ) Plan.

1.15 ENVIRONMENTAL REQUIREMENTS

A. Do not apply fire stopping materials when temperature of substrate material and ambient air is below 60 degrees F. Maintain this minimum temperature before, during, and for minimum 3 days after installation of fire stopping materials.

B. Provide ventilation in areas to receive solvent cured materials.

C. Do not install underground piping, tanks, or tank foundations when bedding is wet or frozen.

D. Install insulation only when ambient temperature and humidity conditions are within range recommended by manufacturer. Maintain temperature during and after installation for minimum period of 24 hours.

E. Do not install instruments when areas are under construction, except rough in, taps, supports and test plugs.

F. Do not install duct sealant when temperatures are less than those recommended by sealant manufacturers. Maintain temperatures during and after installation of duct sealant.

G. Maintain water integrity of roof during and after installation of chimney or vent.

H. Do not install condensing unit foundation pad when ground is frozen or muddy.

1.16 FIELD MEASUREMENTS

A. Verify field measurements prior to fabrication.

B. Verify by field measurements, sizes and configurations are compatible with wall construction and layout.

C. Existing systems and utility lines indicated on drawings are in accordance with information furnished to the Architect and may not be complete. Contractor is responsible for locating, uncovering, disposing of or maintaining existing systems.

1.17 COORDINATION

A. Visit the site and become familiar with existing conditions affecting work.

B. Verify locations of any overhead or buried utilities on or near site. Determine such locations in conjunction with all public and private utility companies and with all authorities having jurisdiction.

C. Existing systems and utility lines indicated on drawings are in accordance with information furnished to the Architect and may not be complete. Contractor is responsible for locating, uncovering, disposing of or maintaining existing systems.

D. HVAC drawings are diagrammatic and do not indicate all possible site conditions. The contractor shall verify all measurements, dimensions and connections on site and coordinate between trades to preclude interferences. The contractor shall provide adjustments to piping or ductwork as necessary to fit conditions including but is not limited to relocation, offsets, and transitions.

E. In the event of a conflict with other trades of work, the following priority from highest to lowest shall be followed: Structural, lighting, HVAC, plumbing/piping and sprinklers. Starting with the lowest priority, the HVAC, plumbing, and sprinkler contractors shall provide whatever materials, offsets, labor etc. is required to resolve the conflict.

F. When discrepancies occur between plans and specifications, the Architect will determine which takes precedence and the Contractor shall perform the selected requirement at no additional cost.

G. Prior to ordering equipment cross-check mechanical and electrical drawings and specifications to assure proper location and electrical characteristics of connections serving mechanical and electrical equipment.

H. Advise the Architect of any modifications required to suit equipment furnished. Costs for modifications due to equipment substitution will be borne by the contractor.

I. Wherever conflicts occur between different parts of the Contract Documents the greater quantity, the better quality, or larger size shall prevail unless the Architect informs the Contractor otherwise in writing.

J. The scale of each drawing is relatively accurate, but the Contractor is warned to obtain the necessary dimensions for any exact takeoffs from the Architect. No additional cost to the Owner will be considered for failure to obtain exact dimensions where not clear or in error on the drawings. Any device or equipment roughed in improperly and not positioned on implied centerlines or as required by good practice shall be repositioned at no cost to the Owner.

K. Where the word 'verify' is used on the documents, the contractor shall field verify the existing conditions and modify the scope of the installation as required to meet the verified conditions without additional cost to the Owner.

L. Coordinate trenching, excavating, bedding, backfilling of buried systems with requirements of this specification.

M. Coordinate wall openings, piping rough-in locations, concrete housekeeping pads, and electrical rough-in locations to accommodate Work of this Section.

N. Coordinate all equipment with building control work.

O. Coordinate installation of
1. Condensing units with concrete pad and roof structure.
2. Air handling units with building structure.
3. Unit installation with roof structure, piping systems, and ceiling for unit access.
4. Roof curbs with roof structure, roof deck and roof membrane installation.

1.18 CUTTING, FITTING, REPAIRING AND PATCHING

A. Arrange and pay for all cutting, fitting, repairing, patching and finishing of work by other trades where necessary for installation of mechanical work. Perform work only with craftsmen skilled in their respective trades.

B. Avoid cutting, where possible, by setting sleeves, frames, etc., and by coordinating for openings in advance. Assist other trades in securing correct location and placement of rough-frames, sleeves, openings, etc. for ducts and piping.

C. Cut all holes neatly and as small as possible to admit work. Perform cutting in manner so as not to weaken walls, partitions or floors. Drill holes required to be cut in floors without breaking out around holes.

1.19 SALVAGE

A. Remove excess piping and ductwork, plug or cap any unused branch connections. Remove scrap pipe and all other excess materials from the site.

B. Comply with contractor's Construction Waste Management Plan. Retain and submit all trip and tip tickets for all construction debris and waste hauling, indicating material content, tonnage, date hauled and facility to where materials were hauled.

1.20 ELECTRICAL

A. Short-Circuit Current Rating (SCCR): All HVAC and refrigeration equipment with multi-motor or combination electrical loads shall comply with NEC 110.10 & 440.4 and must include a SCCR greater than the Available Interrupting Current (AIC) of the electrical circuit serving the equipment. See electrical drawings for required AIC kA rating. Equipment SCCR may be presented in writing from the manufacturer or shown on the unit nameplate. Refrigeration or air-conditioning equipment over 60 Amps MOCP must

list the SCCR on the unit nameplate. If the AIC rating is unavailable or cannot be determined provide equipment with a minimum SCCR of 10kA.

B. Motor Starters: By mechanical equipment manufacturer where factory mounted controls are provided. Variable frequency drives by Division 23, all other starters provided by Electrical Contractor.

C. Power Wiring: By Electrical Contractor.

D. Control Wiring: Responsibility of Division 23, including all line and low voltage control wiring. Owner will not entertain additional cost due to lack of coordination between HVAC Contractor and Electrical Contractor.

1.21 EXTRA MATERIALS

A. Furnish
1. Two refrigerant oil test kits each containing everything required for conducting one test.
2. Three sets of disposable filters for each unit.
3. One set of fan belts for each unit.

1.22 PROJECT CLOSEOUT

A. Completion, submission and approval of the following is required for final project closeout.
1. Execution of Architect's and Engineer’s final observation reports (punchlist)
2. Operating and Maintenance Instructions
3. Operating and Maintenance Manual
4. Equipment and Pipe Cleaning
5. Record Drawings
6. Testing
7. Commissioning
8. Warranty

B. See Division 01 for additional requirements.

1.23 OPERATING AND MAINTENANCE INSTRUCTIONS

A. General: In addition to requirements of Division 01, following initial operation of HVAC systems and prior to acceptance by the Architect, perform the following services.

B. At least two weeks prior to each instruction period, give written notification of readiness to proceed to the Architect and Owner, and obtain mutually acceptable dates.

C. Conduct demonstrations and instructions for the Owner's representatives, pointing out requirements for operating, servicing and maintaining equipment and systems. Describe general system operation and specific equipment functions. Cover all equipment calibration, setpoint adjustment, safeties and alarms.

D. Furnish qualifications of Contractor's personnel in charge of the instruction; foreman position is minimum acceptable. Where equipment startup is performed by supplier’s or manufacturer’s personnel, those personnel should also provide training on that equipment.

E. During demonstrations and instructions include and reference information from maintenance manuals and contract drawings.

1. Provide documentation of all instruction which includes:
   a. Date and time of instruction
   b. Name, affiliation and qualifications of the instructor
   c. Name and affiliation of the attendees
   d. Topics, systems, and equipment covered
   e. Length of instruction

F. Minimum duration of instruction periods:
   1. HVAC Systems 2 hours
   2. Control Systems 2 hours

1.24 OPERATING AND MAINTENANCE MANUALS

A. Contents: Furnish, in accord with Division 1, one PDF and one bound copy of operating and maintenance manuals to include the following:
   1. Manufacturers, suppliers, contractor names, addresses and phone numbers.
   2. Warranty service contractors' names, address and phone numbers (if different from above).
   3. Schedule and description of routine maintenance for each component to include oiling, lubrication and greasing data.
   4. Manufacturer's cuts and rating tables, including brochures for all submittal items.
   5. Part numbers of all replaceable items.
   6. Control diagrams and operation sequence.
   7. Written guarantees.
   8. Record drawings corrected and completed.
   9. Completed equipment start-up forms and checklists.
   10. Final copy of testing, adjusting, and balancing report.

B. Operation and Maintenance Data:
   1. Include, spare parts lists, exploded assembly views for all equipment.
   2. Submit installation instructions, adjustment instructions, spare parts lists, exploded assembly views for all equipment.
   3. Submit inspection period, cleaning methods, recommended cleaning materials, and calibration tolerances.
   4. Submit manufacturer's descriptive literature, operating instructions, and maintenance and repair data. Include directions for resetting constant volume regulators.

C. Filters: Operation and Maintenance Data: Submit instructions for operation, changing, and periodic cleaning.

D. Binders:
   1. Furnish typewritten or printed index and tabbed dividers between principal categories.
   2. Bind each manual in a hard-backed loose-leaf binder.

E. Imprint on cover:
   1. Name of project.
   2. Owner.
   3. Location of project.
   4. Architect.
   5. Contractor.
   6. Year of completion.

F. Imprint on backing:

1. Name of project.
2. Year of completion.

G. Submittals:
1. Preliminary Copies: Prior to scheduled completion of the project, submit one PDF copy for review by the Architect.
2. Final Copies: After approval of the preliminary copy, submit one PDF and one bound copy to the Owner.

1.25 EQUIPMENT AND PIPE CLEANING

A. Clean interior and exterior of all equipment. Equipment shall be free of dirt, construction debris, corrosion, etc.

B. Adequate provisions shall be made during construction to eliminate dirt, debris or other material from entering and collecting inside of pipe, ductwork and equipment. Any collection of material shall be thoroughly cleaned before equipment startup and if necessary again before owner occupancy.

C. Clean exterior of all exposed pipe and ductwork.

1.26 RECORD DRAWINGS

A. Submit one digital file with all drawings in PDF format.

B. Make all notes and revisions on PDF set in red.

C. Show location of equipment, location and size of piping, location and size of ductwork. Locate all valves, control dampers and similar equipment with tag or label identification. Indicate locations and elevations of exterior pipe and utility connections. Maintain continuously updated drawings during progress of project.

D. Record actual locations of tagged valves and control dampers; include valve tag numbers. Record actual locations of flexible connectors and expansion joints.

E. Record actual locations of equipment, clean-outs, controlling devices, and all above grade, under-floor, and buried piping and ductwork. Provide dimensions from gridline or walls to indicate specific locations.

1.27 TESTING

A. Provide completed start-up forms and checklists.

B. Perform testing and balancing of HVAC systems as described in this Division and as required by applicable codes and ordinances.

C. Provide changes in sheaves, belts, and dampers as required for correct balance.

D. Provide commissioning of Control System, and all mechanical components in compliance with the applicable Energy Code, the commissioning notes on the drawings and commissioning specifications of this Division. Written verification of test to be signed by Owner's Representative

1.28 COMMISSIONING REPORT

A. Submit three (3) copies of the preliminary commissioning report as outlined on drawing commissioning notes and specifications of this Division. This report is an execution and fulfillment of the commissioning plan. This report shall be completed before the final mechanical permit inspection. At a minimum this report shall include:
1. Test and balance report
2. Complete equipment startup checklists
3. Functional test reports
4. Sequence of Operation test reports
5. O&M materials
6. Record drawings
7. Owner training documentation
8. Note any discrepancies observed during testing and any corrective actions taken or date when corrective action will be taken.
9. Note any tests which could not be performed due to weather conditions.

B. After receiving review comments from the preliminary commissioning plan make corrections indicated and submit three (3) copies of the final commissioning report. At a minimum this report shall include the information from the preliminary commissioning report and the following:
1. Corrective measures taken in response to preliminary report or field observation report.

1.29 WARRANTIES AND CONTRACTOR'S GUARANTEE

A. All work, material and equipment shall be free of defect, complete and in perfect operating order at time of delivery to Owner.

B. Furnish one year warranty from date of substantial completion for all systems unless specifically noted otherwise.

C. Without cost to Owner, **correct all defects and failures discovered within one year from date of final acceptance**, except when in the opinion of the Architect a failure is due to neglect or carelessness of the Owner.

D. The guarantee of the Contractor is independent of shorter time limits by any manufacturer of equipment furnished. Submit with Operation and Maintenance Manual all guarantees which exceed one year.

E. Make all necessary balancing and control adjustments during first year of operation.

F. The presence of any inspector or observer during any construction does not relieve the Contractor from responsibility for defects discovered after completion of the work.

PART 2 NOT USED

PART 3 EXECUTION

3.1 DOCUMENTATION

A. Additional plan submittals to reviewing authority: If additional drawing submittals are required at any time during construction contractor shall submit drawings, review with

authority, and pick up subsequent approved drawings. Engineer will revise and/or prepare drawings for submittal.

3.2 INSPECTION

A. Do not allow any work to be covered up or enclosed until inspected, tested and approved by the Architect and all authorities having jurisdiction over the work.

B. Should any work be enclosed or covered up before such inspection and test, Contractor shall at his own expense uncover work, and after it has been inspected, tested and approved, make all repairs as necessary to restore all work disturbed by him to its original condition.

C. Energy Code C104 specifically requires the following inspections.
1. Mechanical Equipment Efficiency and Economizer: To be made after all equipment and controls required by the Energy Code and this specification are installed and prior to the concealment of such equipment or controls.
2. Mechanical Pipe and Duct Insulation: To be made after all pipe and duct insulation is in place, but before concealment.
3. Motor Inspections: To be made after installation of all equipment covered by the Energy Code and this specification but before concealment.

3.3 FIELD QUALITY CONTROL

A. Inspect isolated equipment after installation for proper movement clearance.

3.4 CLEANING

A. Clean adjacent surfaces of fire stopping materials.

B. Clean ductwork and equipment.

3.5 PROTECTION OF FINISHED WORK

A. Protect adjacent surfaces from damage by material installation.

END OF SECTION

SECTION 23 05 00 - COMMON WORK RESULTS FOR HVAC

PART 1 GENERAL

1.1 SUMMARY

A. Section Includes:
1. Hangers and Supports.
2. Expansion Fittings and Loops.
3. Vibration and Seismic Controls.
4. Motors
5. Firestopping.
6. Condensate Pumps
7. Access Panels
8. Tags and Identification.
9. Execution

1.2 GENERAL REQUIREMENTS

A. Comply with requirements and recommendations of Manufacturers Standardization Society of the Valve and Fittings Industry (MSS) Standards SP-58 and SP-69.

B. Comply with requirements and recommendations of Sheetmetal and Air Conditioning Contractors National Association (SMACNA) HVAC Duct Construction Standards.

C. Conform to requirements of IBC 1613 and SMACNA "Seismic Restraint Manual Guidelines for Mechanical Systems".

1.3 MATERIALS AND EQUIPMENT

A. Where two or more units of same class of equipment are required, use products of a single manufacturer. All equipment shall be new and free from damage.

B. Protect stored material and equipment against weather, corrosion and dirt. Protect installed mechanical components, including but not limited to piping, ductwork, and equipment against weather damage, corrosion, dirt and construction dust. Seal equipment and ductwork where and when necessary to be kept clean.

C. Provide major equipment components with manufacturer's name, address, catalog number and capacity indicated on a nameplate, securely affixed in a conspicuous place.

D. Furnish standard and fabricated hangers and supports complete with necessary inserts, bolts, nuts, rods, washers and other accessories.

1.4 REQUIREMENTS

A. Provide incompressible inserts and shields at all piping supports on pipe to be insulated per 23 07 00.

B. Provide vibration isolation on motor driven equipment, plus connected piping.

C. Provide structural work and equipment required for expansion and contraction of piping. Verify anchors, guides, and expansion joints provide and adequately protect system.

D. Firestopping Materials: Provide to achieve fire ratings as noted on architect's drawings for adjacent construction, but not less than 1 hour fire rating. ASTM and UL.
   1. Ratings may be 3-hours for firestopping in through-penetrations of 4-hour fire rated assemblies unless otherwise required by applicable codes.
   2. Surface Burning: UL 723 with maximum flame spread / smoke developed rating of 25/50.
   3. Firestop interruptions to fire rated assemblies, materials, and components.

E. Prevent contact between dissimilar metals, such as copper tubing and steel, by use of copper-plated, plastic coated, or flexible materials. All supports which contact copper tubing shall be copper plated.

F. Firestop interruptions to fire rated assemblies, materials and components.

1.5 QUALITY ASSURANCE

A. Installed products shall have surface Burning Characteristics: 25/50 flame spread/smoke developed index when tested in accordance with ASTM E84.

B. Perform work in accordance with local jurisdiction's requirements and AWS D1.1 for welding hanger and support attachments to building structure.

C. Conform to ASME A13.1 for color scheme for identification of piping systems and accessories.

PART 2 PRODUCTS

2.1 DUCT HANGERS AND SUPPORTS

A. Hanger straps and rods shall be in accord with SMACNA Duct Construction Standards.

B. Fasten bracing to ductwork, including riveting, bolting, and tack welding per SMACNA.

C. Provide galvanized steel band or fabricated angle iron brackets for wall supports.

D. Exposed ducts shall be supported/anchored to structure at closer spacing and using heavier materials, wherever so indicated on drawings.

E. Hanger Rods: Carbon Steel, with hex nuts and flat washers.

F. Concrete Inserts:
   1. Continuous channel - Unistrut or approved.
   2. Universal, malleable iron - Type 18, FS WW-H-171.

G. Beam Clamps and Attachments as required.

2.2 PIPE HANGERS AND SUPPORTS

A. Provide hangers and supports with incompressible insulation inserts and shields for all piping to be insulated per 230700.
   1. Manufacturer: Pipe Shields, INC or approved equal.
   2. Material: Calcium Silicate or Uretherne per temperature application.
   3. Thickness: Insert thickness shall match required insulation thickness per 230700.

B. Refrigerant Piping:

1. Hangers for rigid pipe: Carbon steel, adjustable swivel, split ring with Armacell Armafix insulated rigid insert.
2. Hangers for flexible pipe: Carbon steel, adjustable, clevis with Armacell Armafix insulated rigid insert and saddle.
3. Hangers for paired flexible pipe: Carbon steel, adjustable, clevis with 1" wide overlapping steel band and saddle.

2.3 HANGER ACCESSORIES

A. Hanger Rods: Mild steel threaded both ends, threaded on one end, or continuous threaded.

2.4 INSERTS

A. Malleable iron case of steel shell and expander plug for threaded connection with lateral adjustment, top slot for reinforcing rods, lugs for attaching to forms; size inserts to suit threaded hanger rods.

2.5 ACCESS PANELS

A. Milcor or approved equal.

B. Include an allowance for a minimum of 4 access panels.

C. Architectural grade, 14 guage frame and door, painted steel or stainless steel based on application.

2.6 UNIONS AND FLANGES

A. Unions for Pipe 2 inches and Smaller:
1. Ferrous Piping: Class 150, 300 psi CWP, malleable iron, threaded.
2. Copper Piping: Class 150, 300 psi CWP, bronze unions.
3. Dielectric Connections: Union with galvanized or plated steel threaded end, copper solder end, water impervious isolation barrier.
4. PVC Piping: PVC.
5. CPVC Piping: CPVC.

2.7 FLASHING

A. Metal Flashing: 26 gage thick galvanized steel.

B. Metal Counterflashing: 22 gage thick galvanized steel.

C. Lead Flashing:
1. Waterproofing: 5 lb./sq. ft sheet lead.
2. Soundproofing: 1 lb./sq. ft sheet lead.

D. Flexible Flashing: 47 mil thick sheet butyl; compatible with roofing.

E. Caps: Steel, 22 gauge minimum; 16 gauge at fire resistant elements.

2.8 EQUIPMENT CURBS

A. Manufacturers' curbs where indicated on drawings.

B. Fabricated: Welded 18 gage galvanized steel shell and base, mitered 3-inch cant, variable step to match roof insulation, 1-1/2 inch thick insulation, wood nailer.

2.9 SLEEVES

A. Sleeves for Pipes Through Non-fire Rated Floors: 18 gage thick galvanized steel.

B. Sleeves for Pipes Through Non-fire Rated Beams, Walls, Footings, and Potentially Wet Floors: Steel pipe or 18 gage thick galvanized steel.

C. Sleeves for Ductwork: 18 gage thick galvanized steel.

D. Sealant: Acrylic

E. Size large enough to allow for movement due to expansion and to provide for continuous insulation or installation of fire sealant at fire-rated walls. Note that insulation is discontinuous at fire walls.

2.10 MECHANICAL SLEEVE SEALS

A. Manufacturers: Metraflex Metraseal, Thunderline Link-Seal or approved equal.

B. Product Description: Modular mechanical type, consisting of interlocking synthetic rubber links shaped to continuously fill annular space between object and sleeve, connected with bolts and pressure plates causing rubber sealing elements to expand when tightened, providing watertight seal and electrical insulation.

2.11 FORMED STEEL CHANNEL

A. Manufacturers: Allied Tube & Conduit, B-Line Systems, Unistrut or approved equal.

B. Product Description: Galvanized 12 gage thick steel, with holes 1-1/2 inches on center.

2.12 SUPPORT ACCESSORIES

A. Pipe Alignment Guides: Two piece welded steel with enamel paint, bolted, with spider to fit standard pipe, frame with four mounting holes, clearance for minimum 1 inch thick insulation, minimum 3 inch travel.

B. Swivel Joints: Steel / Bronze body, double ball bearing race, field lubricated, with rubber (Buna-N) o-ring seals.

2.13 MOTORS

A. General:
1. Temperature Rating: Rated for 40 degree C environment with maximum 50 degree C temperature rise for continuous duty at full load.
2. Starting Capability: Not less than 12 starts per hour.
3. Service Factor: 1.15 for polyphase motors and 1.35 for single-phase motors.
4. Enclosure Type: Open drip-proof motors for indoor use where satisfactorily housed or remotely located during operation, and guarded drip-proof motors where exposed to contact by employees or building occupants. Weather-protected Type I for outdoor use, Type II, where not housed.
5. Overload Protection: Built-in thermal overload protection.
6. Name Plate: Indicate full identification of manufacturer, ratings, characteristics, construction, special features and similar information.

B. Motors <= 1 hp:
   1. Provide ECM motor with speed control.

C. 1 hp > Motors < 7.5 hp:
   1. Provide ECM or NEMA Premium efficiency motor.

D. Motors >= 7.5 hp:
   1. Provide NEMA Premium efficiency motor rated for VFD usage.
   2. Provide with Variable Frequency Drive.

E. All motor efficiencies shall conform to Washington State Energy Code and NEMA MG-1.

2.14 FIRESTOPPING-APPLIED

A. Manufacturers: RectorSeal, Dow Corning, 3M Fire Protection or approved equal.

B. General:
   1. Fire stopping materials shall conform to Flame (F) and Temperature (T) ratings as required by applicable building codes and tested by nationally accepted test agencies per ASTM E 814 or UL 1479 fire tests for through penetrations, and ASTM E 1966 or UL 2079 for construction joints, and UL 2307 for perimeter edge joints.
   2. Fire stopping material shall be free of asbestos, PCBs, ethylene glycol, and lead.
   3. Do not use any product containing solvents or that requires hazardous waste disposal.
   4. Fire stopping shall be performed by a contractor trained or approved by firestop manufacturer.
   5. Select products with rating not less than rating of wall or floor being penetrated.

C. Single Source Responsibility: Provide firestop systems for all conditions from a single supplier.

D. Product Description: Provide Latex caulk/sealant, Silicone caulk/sealant, Intumescent Wrap Strip, Firestop Putty, Firestop Collar or Intumescent Sleeve to meet each specific application and performance requirement.

E. Primer: Type recommended by firestopping manufacturer for specific substrate surfaces and suitable for required fire ratings.

F. Installation Accessories: Provide clips, collars, fasteners, temporary stops or dams, and other devices required to position and retain materials in place.
   1. Forming/Damming Materials: Mineral fiberboard, backer rod or other type recommended by Manufacturer's tested system.

2.15 PENETRATIONS OF NON-RATED SURFACES

A. Stamped steel, chrome plated, hinged, split ring escutcheons or floor plates or ceiling plates for covering openings in occupied areas where piping is exposed.

B. For exterior wall openings below grade, furnish mechanical sealing device to continuously fill annular space between piping and cored opening or water-stop type wall sleeve.

2.16 CONDENSATE PUMP

A. Manufacturer: BlueDiamond MaxiBlue or approved equal.

B. Rotary elastomer diaphragm technology, 3.7 gal/hr, 23 feet hd, 16.5 feet lift, 21 dba. Thermistor level sensing. Capable of running dry. Provide with reservoir and accessories.

2.17 CONDENSATE OVERFLOW SWITCH

A. Manufacturer: Rectorseal Safe-T-Switch or approved equal.

B. Sealed, waterproof reed/magnet float switch installed on the overflow outlet of drain pans or on an auxiliary drain pan. UL 508, 24 volt AC.

2.18 VIBRATION ISOLATORS

A. Manufacturers: Metraflex, Mason, Amber Booth or approved equal.

B. Restrained Closed Spring Isolators:
1. Spring Isolators:
a. For Exterior and Humid Areas: Furnish hot dipped galvanized housings and neoprene coated springs.
b. Code: Color code springs for load carrying capacity.
2. Type: Closed spring mount with top and bottom housing separated with neoprene rubber stabilizers.
3. Springs: Minimum horizontal stiffness equal to 75 percent vertical stiffness, with working deflection between 0.3 and 0.6 of maximum deflection.
4. Housings: Incorporate neoprene isolation pad meeting requirements for neoprene pad isolators, and neoprene side stabilizers with minimum 0.25 inch clearance and limit stops.

C. Spring Hanger:
1. Spring Isolators:
a. For Exterior and Humid Areas: Furnish hot dipped galvanized housings and neoprene coated springs.
b. Code: Color code springs for load carrying capacity.
2. Springs: Minimum horizontal stiffness equal to 75 percent vertical stiffness, with working deflection between 0.3 and 0.6 of maximum deflection.
3. Housings: Incorporate [neoprene isolation pad meeting requirements for neoprene pad isolators] [rubber hanger with threaded insert].
4. Misalignment: Capable of 20 degree hanger rod misalignment.

D. Neoprene Pad Isolators:
1. Rubber or neoprene-waffle pads.
a. 30 durometer.
b. Minimum 1/2 inch thick.
c. Maximum loading 40 psi.
d. Height of ribs: not to exceed 0.7 times width.
2. Configuration: Single layer.

E. Rubber Mount or Hanger: Molded rubber designed for 0.5 inches deflection with threaded insert.

2.19 TAGS

A. Plastic Tags: Laminated three-layer plastic with engraved black letters on light contrasting background color. Tag size minimum 1-1/2 inches high.

B. Metal Tags: Brass, Aluminum or Stainless Steel with stamped letters; tag size minimum 1-1/2 inches diameter with finished edges. Plain English designations.

C. Information Tags: Clear plastic with printed "Danger," "Caution," or "Warning" and message; size 3-1/4 x 5-5/8 inches with grommet and self-locking nylon ties.

D. Tag Chart: Plain English designations so no tag or valve chart is required.

2.20 PIPE MARKERS

A. Color and Lettering: Conform to ASME A13.1. Specific examples are noted in the table below.

Service	Background Color	Letter Color	Legend
Refrigerant	Purple	White	R-{TYPE} REFRIGERANT (EXAMPLE: R-410A REFRIGERANT)

B. Plastic Pipe Markers: Factory fabricated, flexible, semi-rigid plastic, preformed to fit around pipe or pipe covering. Larger sizes may have maximum sheet size with spring fastener.

C. Plastic Tape Pipe Markers: Flexible, vinyl film tape with pressure sensitive adhesive backing and printed markings.

2.21 CEILING TACKS

A. Description: Steel with 3/4 inch diameter color-coded head.

B. Color code as follows:
1. HVAC equipment: Yellow.
2. Fire dampers/smoke dampers: Red.
3. Heating/cooling valves: Blue.

2.22 LOCKOUT DEVICES

A. Lockout Hasps: Anodized aluminum hasp with erasable label surface; size minimum 7-1/4 x 3 inches.

B. Valve Lockout Devices: Nylon device preventing access to valve operator, accepting lock shackle.

2.23 PAINT

A. Factory Finished Equipment: See individual equipment specification.

B. Ductwork: Paint interior of ductwork visible through grilles and diffusers with a flat black paint. Prepare and paint surfaces in accord with Division 9.

2.24 SEISMIC SUPPORTS

A. Provide seismic support as required by IBC 1613 and local authorities.

B. Sway bracing for ductwork, piping, and equipment shall consist of steel angles, rods or pipes. Shapes, lengths and methods of attachment shall be in accord with SMACNA "Guidelines for Seismic Restraints of Mechanical Systems".

PART 3 EXECUTION

3.1 EXISTING WORK

A. Provide access to existing piping, ductwork, equipment and other installations remaining active and requiring access.

B. Extend existing piping and ductwork installations using materials and methods compatible with existing installations.

3.2 SURFACE PREPARATION

A. Clean substrate surfaces of dirt, dust, grease, oil, loose material, or other matter affecting bond of firestopping material.

B. Remove incompatible materials affecting bond of adhesives or firestopping.

C. Install backing or damming materials to arrest liquid material leakage.

D. Obtain permission from Architect/Engineer before drilling or cutting structural members.

E. Degrease and clean surfaces to receive adhesive for identification materials.

3.3 INSTALLATION-CLEARANCE

A. Appliances and equipment shall be accessible for inspection, service, repair and replacement.

B. Clearance shall be provided for the replacement of filters.

C. A minimum of 30" of clearance shall be provided in front of the control side of appliances and equipment. Provide additional space when required by NEC.

D. All control components shall be accessible for inspection and replacement.

3.4 INSTALLATION - INSERTS

A. Install inserts for placement in concrete forms.

B. Install inserts for suspending hangers from reinforced concrete slabs and sides of reinforced concrete beams.

C. Provide hooked rod to concrete reinforcement section for inserts carrying pipe 4 inches and larger.

D. Where concrete slabs form finished ceiling, locate inserts flush with slab surface.

E. Where inserts are omitted, drill through concrete slab from below and provide through-bolt with recessed square steel plate and nut recessed into and grouted flush with slab.

3.5 INSTALLATION - PIPE HANGERS AND SUPPORTS

A. Support horizontal piping as scheduled.

B. Install hangers with minimum 1/2 inch space between finished covering and adjacent work.

C. Place hangers within 12 inches of each horizontal elbow.

D. Use hangers with 1-1/2 inch minimum vertical adjustment.

E. Support vertical piping at every floor.

F. Where piping is parallel and at same elevation, provide multiple pipe or trapeze hangers.

G. Support riser piping independently of connected horizontal piping.

H. Provide copper plated hangers and supports for copper piping.

I. Design hangers for pipe movement without disengagement of supported pipe.

J. Adjust hangers and supports as required to bring system to proper line and grade. Piping shall be plumb with floor and parallel/perpendicular to building structure.

K. Prime coat exposed steel hangers and supports. Hangers and supports located in crawl spaces, pipe shafts, and suspended ceiling spaces are not considered exposed.

L. Provide clearance in hangers and from structure and other equipment for installation of insulation. Insulated piping shall have insulation run continuous through hangers and supports with use of rigid inserts. Insulation shall be glued to both sides of insert at hangers and supports, no insulation gaps are allowed. Refer to Section 23 07 00.

M. Support of pipe, tubing and equipment shall be accomplished by means of engineered products, specific to each application. Makeshift, field devised methods shall not be allowed.

3.6 INSTALLATION-PIPING PROTECTION

A. Provide protective shield plates in concealed locations where piping, other than cast-iron or steel, is installed in studs, joists or rafters. Plates shall be 16 gage steel and cover the pipe area plus 2”. Shields may be omitted if piping is more than 1-1/2” from nearest edge of structural member.

3.7 INSTALLATION – DUCTWORK

A. Locate hangers, supports and accessories to handle loads imposed by ductwork, and air distribution devices and with maximum spacing noted.

B. Support all ductwork to prevent sag, undue play and swing.

C. Maximum support spacing per SMACNA standards. Spacing shall not exceed 10 feet.

D. Before concrete is placed, install embedded inserts and secure firmly to form work.

E. Assemble and install hangers and supports on ductwork.

F. All supports and attachments for exposed ducts shall have non-removable fasteners.

G. Attachments to fireproofed steel structure shall be made prior to spraying of fireproofing material. If necessary to disturb fireproofing after initial spraying, provide respraying or repairs necessary to restore the integrity of the fireproofing.

H. Adjust hangers and supports as required to bring system to proper line and grade. Ductwork shall be plumb with floor and parallel/perpendicular to building structure.

3.8 INSTALLATION – SEISMIC CONTROLS

A. Provide seismic restraints and hangers in compliance with IBC 1613 and ASCE 7.

B. Seismic Bracing is specifically required for but not limited to:
1. All smoke control ductwork.
2. All ductwork associated with life safety systems (Including stair and elevator pressurization.
3. All ductwork with a cross sectional area of 6 square feet or a diameter of 34 inches or greater.

C. Seismic Bracing: Follow IBC 1613, ASCE 7, SMACNA Seismic Restraint Manual and the following.
1. Bracing shall be bidder designed to resist seismic loading in accord with Chapter 16 of the International Building Code, ASCE 7 or the SMACNA guideline.
2. Provide seismic calculations as required for Ip = 1.5.
3. Transverse bracing shall occur at a maximum interval of 30 feet, at each duct turn and at the end of a duct run.
4. Longitudinal bracing shall occur at a maximum interval of 60 feet.
5. Bracing may be omitted where duct hangers are less than 12 inches in length.

3.9 INSTALLATION - EQUIPMENT BASES AND SUPPORTS

A. Provide housekeeping pads of concrete, minimum 4 inches thick and extending 6 inches beyond supported equipment.

B. Using templates furnished with equipment, install anchor bolts, and accessories for mounting and anchoring equipment.

C. Construct supports of formed steel channel or steel pipe and fittings. Brace and fasten with flanges bolted to structure.

D. Provide rigid anchors for pipes after vibration isolation components are installed.

3.10 INSTALLATION - FLASHING

A. Provide flexible flashing and metal Counterflashing where piping and ductwork penetrate weather or waterproofed walls, floors, and roofs.

B. Provide acoustical lead flashing around ducts and pipes penetrating equipment rooms for sound control.

C. Provide curbs for roof installations 14 inches minimum high above roofing surface. Flash and counter-flash with sheet metal; seal watertight. Attach Counterflashing to equipment and lap base flashing on roof curbs. Flatten and solder joints.

D. Adjust storm collars tight to pipe with bolts; caulk around top edge. Use storm collars above roof jacks. Screw vertical flange section to face of curb.

3.11 INSTALLATION - SLEEVES

A. Exterior watertight entries: Seal with mechanical sleeve seals.

B. Set sleeves in position in forms. Provide reinforcing around sleeves.

C. Size sleeves large enough to allow for movement due to expansion and contraction. Provide for continuous insulation wrapping.

D. Extend sleeves through floors 1 inch above finished floor level. Caulk sleeves.

E. Where piping or ductwork penetrates floor, ceiling, or wall, close off space between pipe or duct and adjacent work with insulation and caulk or fireproof airtight. Provide close fitting metal collar or escutcheon covers at both sides of penetration.

3.12 INSTALLATION – ACCESS PANELS

A. Furnish access panels for installation at all concealed equipment which requires service, maintenance or adjustment to include but not limited to equipment, dampers, control valves, filters and controls.

B. Provide location layout and required size for all access panels to general contractor. Layout shall be regular and consistent, maintain a uniform wall panel height of 24” center line above finished floor, unless noted otherwise.

C. Furnish fire rated access panels where installed in fire rated assembly.

D. Provide stainless steel access panels where installed in tile surfaces.

E. Furnish access panels to general contractor for installation

F. Paint installed access panels to match wall or ceiling. Verify that panels are not painted shut.

3.13 INSTALLATION – FIRESTOPPING AND SEALS AT PARTITIONS

A. Installation of Firestop shall be performed by either a specialty contractor specializing in firestop application (FM G 4991 or UL Qualified Firestop Contractor), or general or sub-contractors with experience in similar applications and projects with installers qualified, trained, and certified by the firestop manufacturer. Installation shall be performed in strict accordance with manufacturer’s detailed installation procedures.

B. Install material at fire rated construction perimeters and openings containing penetrating sleeves, piping, ductwork, and other items, requiring firestopping.

C. Apply primer where recommended by manufacturer for type of firestopping material and substrate involved, and as required for compliance with required fire ratings.

D. Apply firestopping material in sufficient thickness to achieve required fire and smoke rating, to uniform density and texture.

E. Install dams when required to properly contain Fire stopping materials within openings and as required to achieve required fire resistance rating. Combustible damming material

must be removed after appropriate curing. Incombustible damming materials may be left as a permanent component of the Firestop system.

F. Place foamed material in layers to ensure homogenous density, filling cavities and spaces. Place sealant to completely seal junctions with adjacent dissimilar materials.

G. Place intumescent coating in sufficient coats to achieve rating required.

H. Clean adjacent surfaces of firestopping materials.

I. Seal openings at surface as follows:
   1. Install sleeve through opening and extending beyond minimum of 1 inch on both sides of building element.
   2. Size sleeve allowing minimum of 1 inch void between sleeve and building element.
   3. Pack void with backing material.
   4. Seal ends of sleeve with UL listed fire resistive silicone compound to meet fire rating of structure penetrated.

3.14 INSTALLATION - PENETRATIONS OF NON-RATED SURFACES

A. Seal opening through non-fire rated wall, partition, floor, ceiling, and/or roof opening as follows:
   1. Install sleeve through opening and extending beyond minimum of 1 inch on both sides of building element.
   2. Size sleeve allowing minimum of 1 inch void between sleeve and building element.

B. Install escutcheons where piping penetrates non-fire rated surfaces in occupied spaces.

C. Exterior wall openings below grade: Assemble rubber links of mechanical sealing device to size of piping and tighten in place, in accordance with manufacturer's instructions.

D. Interior partitions: Seal pipe penetrations air tight. Apply sealant to both sides of penetration to completely fill annular space between sleeve and conduit.

3.15 INSTALLATION-VIBRATION ISOLATION

A. Install isolation for motor driven equipment.

B. Install flexible pipe connectors on pipes connected to equipment supported by vibration isolation. Provide line size flexible connectors.

C. Install flexible connectors at right angles to displacement. Install one end immediately adjacent to isolated equipment and anchor other ends. Install in horizontal plane unless indicated otherwise.

D. Adjust equipment level.

E. Install spring hangers without binding.

F. On closed spring isolators, adjust so side stabilizers are clear under normal operating conditions.

G. Prior to making piping connections to equipment with operating weights substantially different from installed weights, block up equipment with temporary shims to final height. When full load is applied, adjust isolators to load to allow shim removal.

3.16 INSTALLATION – CONDENSATE

A. For all cooling coils, high efficiency gas burners and other equipment requiring condensate drainage, provide appropriately sized condensate pumps where gravity drainage is not possible or where scheduled.

B. Coordinate number and type of condensate pumps required with Plumbing Contractor.

C. Provide condensate overflow switches on cooling coils where damage to building components could occur as a result of overflow as required by IMC.

D. For wall mounted fan coils, condensate pump, reservoir, wiring and piping shall not be exposed to view. Field fabricated concealment is not acceptable.

E. For pumps located in equipment cabinet, above ceiling, fascia kit or unfinished space, obtain power for condensate pump directly from electrical terminal block on unit served. Coordinate with electrical contractor.

F. For wall mount fan coils with pumps located above a ceiling, obtain power from electrical circuit. Coordinate with electrical contractor.

G. Connect condensate pump alarm wiring to unit served power terminals per manufacturer's installation instructions. Coordinate with electrical contractor. Unit served shall shut down when condensate reservoir is full to prevent overflow.

3.17 INSTALLATION-IDENTIFICATION

A. Install identifying devices after completion of coverings and painting.

B. Install plastic nameplates with corrosive-resistant mechanical fasteners, or adhesive.

C. Install labels with sufficient adhesive for permanent adhesion and seal with clear lacquer. For unfinished canvas covering, apply paint primer before applying labels.

D. Install tags using corrosion resistant chain. Use plain English designations so no index or chart is required.

E. Nameplates: Identify mechanical equipment (air handling units, air terminal units, pumps, heat transfer equipment, tanks, and water treatment devices) with plastic nameplates.
1. Identify in-line pumps and other small devices with name tags.
2. Identify control panels and major control components outside panels with plastic nameplates.
3. Identity description should be as numbered on drawings or plain English description. i.e. "EF-1" or "Boiler Controls".
4. Label automatic controls, instruments, and relays. Key to control schematic.
5. Label wall controls and switches with associated equipment designation and control function, i.e. "EF-1 Switch".

F. Valve Tags: Identify valves in main and branch piping and radiator valves with tags.
1. Do not provide numbered tags.
2. Provide tags with plain English description of service and function. i.e. "Hot Water Supply, 2nd Floor"

G. Pipe Labels: Identify piping, concealed or exposed, with plastic tape pipe markers.
   1. Identify service, flow direction, and pressure.
   2. Install in clear view and align with axis of piping.
   3. Locate identification on straight runs including risers and drops with spacing not to exceed 20 feet.
   4. Locate adjacent to each valve and tee, at each side of penetration of structure or enclosure, and at each obstruction.

H. Provide ceiling tacks to locate valves or dampers above T-bar type panel ceilings. Locate in corner of panel closest to equipment.

I. Equipment and Valve Tag Index: Plain English designations so no chart or index is required.

3.18 CLEANING

A. Contractor shall make all mechanical components free of dust and dirt prior to startup.

3.19 PROTECTION OF FINISHED WORK

A. Protect adjacent surfaces from damage by material installation.

3.20 SCHEDULES

A. Copper and Steel Pipe Hanger Spacing:

PIPE SIZE Inches	COPPER TUBING MAXIMUM HANGER SPACING Feet	STEEL PIPE MAXIMUM HANGER SPACING Feet	COPPER TUBING HANGER ROD DIAMETER Inches	STEEL PIPE HANGER ROD DIAMETER Inches
1/2	5	7	3/8	3/8
3/4	5	7	3/8	3/8
1	6	7	3/8	3/8
1-1/4	7	7	3/8	3/8
1-1/2	8	9	3/8	3/8

B. Plastic and Ductile Iron Pipe Hanger Spacing:

PIPE MATERIAL	MAXIMUM HANGER SPACING Feet	HANGER ROD DIAMETER Inches
ABS (All sizes)	4	3/8
FRP (All Sizes)	4	3/8
Ductile Iron (Note 2)		
PVC (All Sizes)	4	3/8

C. Note 1:Refer to manufacturer's recommendations for grooved end piping systems.

D. Note 2: 20 feet maximum spacing, minimum of one hanger for each pipe section close to joint behind bell. Provide hanger at each change of direction and each branch

connection. For pipe sizes 6 inches and smaller, subjected to loadings other than weight of pipe and contents, limit span to maximum spacing for water service steel pipe.

3.21 SCHEDULES

A. Pipe Isolation Schedule:

Pipe Size Inch	Isolated Distance from Equipment diameters
1	120 diameters
2	90 diameters
3	80 diameters

END OF SECTION

SECTION 23 05 93 - TESTING, ADJUSTING, AND BALANCING

PART 1 GENERAL

1.1 SCOPE

A. Testing, adjusting and balancing of air systems.

B. Measurement of final operating conditions of above systems.

C. Duct pressure (leakage) testing as required by 23 31 00.

D. Preparation of formal report.

1.2 PERFORMANCE CRITERIA

A. Work shall be performed by approved independent testing and balancing agency.

B. Perform testing and balancing in accordance with Associated Air Balance Council (AABC) or National Environmental Balancing Bureau (NEBB). All work shall be supervised.

C. Calibrate instruments used for testing and balancing within a period of six months of start of work.

D. Mechanical contractor shall assist Balancing Agency in testing and balancing of mechanical system.

1.3 SUBMITTAL

A. Provide three (3) copies of typed and bound report to be included in Preliminary Commissioning Report.

B. Provide three (3) additional copies of updated and/or corrected report for Final Commissioning Report.

1.4 FORMAT

A. Report shall consist of test sheets similar to AABC Standard Forms for Diffusers and Grilles, Air Handling Equipment, Exhaust Fans, and Pumps (i.e., Form 12666 for Diffusers and Grilles).

B. Report shall include the following.
1. Preface suggesting abnormalities and problems encountered.
2. Instrumentation List including type, model, manufacturer, serial number, and calibration dates.
3. System Identification reporting location of equipment, zones, supply, return, and exhaust openings.
4. Record following for each piece of air handling equipment.
   a. Manufacturer, model number, and serial number.
   b. Design and manufacturer rated data.
   c. Actual CFM
   d. Suction and discharge static pressure of each fan.
   e. Outside-air and return-air total CFM.

f. Actual operating current, voltage, and brake horsepower of each fan motor.
g. Final RPM of each motor.
h. Fan and motor sheave manufacturer, model, size, number of grooves and center distance.
i. Belt size and quantity.
j. Static-pressure controls final operating set points.

1.5 QUALIFICATIONS

A. Work of this section shall be performed by independent Air Testing and Balance Agency specializing in testing and balancing of heating, ventilating, and cooling systems to balance, adjust, and test air moving equipment, air distribution, and exhaust systems.

B. Agency shall provide proof of having successfully completed at least five years of specialized experience in air and hydronic system balancing. Work by this Agency shall be done under direct supervision of qualified heating and ventilating engineer employed by Agency.

C. Agency shall be approved in writing by Architect.

D. Neither Architect's engineering consultant nor anyone performing work on this Project under Division 23 shall be permitted to do this work.

1.6 ACCEPTABLE TEST AND BALANCE COMPANIES

A. AIRTEST Co., Inc. 425-313-0172

B. Neudorfer Engineers, Inc. 206-621-1810

C. Hardin & Sons 253-862-6645

PART 2 PRODUCTS

Not Used.

PART 3 EXECUTION

3.1 EXAMINATION

A. Verify systems are complete and in good working order before commencing work. Then, put all systems and equipment into operation and continue operation until all adjusting, balancing, testing, demonstrations, instructions and cleaning of systems have been completed. Verify the following:
1. Systems are started and operating in safe and normal condition.
2. Temperature control systems are installed complete and operable.
3. Proper thermal overload protection is in place for electrical equipment.
4. Final filters are clean and in place.
5. Duct systems are clean of debris.
6. Fans are rotating correctly.
7. Fire and volume dampers are in place and open.
8. Air coil fins are cleaned and combed.
9. Access doors are closed and duct end caps are in place.
10. Air outlets are installed and connected.

11. Duct system leakage is minimized.
12. Hydronic systems are flushed, filled, and vented.
13. Pumps are rotating correctly.
14. Proper strainer baskets are clean and in place or in normal position.
15. Service and balancing valves are open.

3.2 PREPARATION

A. If requested, conduct tests in presence of Architect.

B. Instruments used by Agency shall be accurately calibrated and maintained in good working order.

C. Furnish instruments required for testing, adjusting, and balancing operations including ladders, scaffolding, additional dampers and clean filters.

D. Make instruments available to Architect/Engineer to facilitate spot checks during testing.

E. During balancing technician's initial test of air handling systems, the Mechanical Contractor shall have his sheetmetal foreman present to assist in any drive changes or dampers necessary.

3.3 INSTALLATION TOLERANCES

A. Diffuser, register and grille air flow rates shall be measured and adjusted to deliver final flow rates within 10% and within 50 cfm of design rates, whichever is less.

B. Fan air flow rates shall be measured and adjusted to deliver final flow rates within 10% and within 100 cfm of design rates, whichever is less.

C. Two-speed fans: Balance fans and airflow control devices at both minimum and maximum airflow settings.

3.4 ENERGY RECOVERY VENTILATION (ERV) SYSTEM TOLERANCE

A. Test and balance ERVs to maintain scheduled airflow differential between outside air and exhaust air quantities. The tested differential in airflows shall not be less than scheduled.

B. Spaces which have both outside air and exhaust air from an ERV shall maintain tolerance on the differential between the air quantities. Outside air and exhaust air flow rates shall be measured and adjusted to deliver final flow rates whose differential is within 10% and within 50 cfm of design rates, whichever is less.

C. ERV systems with supply air duct static pressure control for Demand Control Ventilation: Balance system airflows and set supply duct static pressure setpoint based on minimum design airflow. Adjust DCV control(s) to provide maximum design airflow(s). Verify that supply fan speed increases in response to duct pressure loss when DCV controls are at maximum airflow.

D. Two-speed systems: Balance fans and airflow control devices at both minimum and maximum airflow settings.

3.5 ADJUSTING

A. Ensure that clean filters, of the type specified, are installed prior to air balancing.

B. Provide additional volume dampers as necessary to accomplish design balances.

C. Set minimum position of motorized dampers for scheduled minimum outside air.

D. Pumps shall be proportionally balanced to minimize throttling losses, and then the pump impeller shall be trimmed or the pump speed modified to meet design flow conditions.

E. Check motors for proper rotation, coupling and drive alignment, belt tension and freedom from vibration, etc.

F. Provide belt drive/sheave changes to adjust fan rpm as necessary to accomplish design balances.

G. Verify recorded data represents actual measured or observed conditions.

H. Permanently mark settings of valves, dampers, and other adjustment devices allowing settings to be restored. Set and lock memory stops.

I. After adjustment, take measurements to verify balance has not been disrupted. If disrupted, verify correcting adjustments have been made.

J. Report defects and deficiencies noted during performance of services, preventing system balance.

K. Leave systems in proper working order, replacing belt guards, closing access doors, closing doors to electrical switch boxes, and restoring thermostats to specified settings.

L. After completion of testing and balancing, operate systems under normal conditions for at least two days of 8 hours each to demonstrate specified performance.

3.6 AIR SYSTEM PROCEDURE

A. Perform soloing testing and balancing functions in accordance with Associates Air Balance Council National Standards.

B. Adjust air handling and air distribution systems to obtain design supply, return, and/or exhaust air quantities.
   1. Test and adjust total system CFM by adjustment of fan speeds. Provide sheave drive changes as necessary.
   2. Perform tests at high and low speeds of variable speed systems.
   3. Adjust branch air quantities by damper regulation. Multi-diffuser branch ducts shall have at least one outlet or inlet volume damper completely open to minimize throttling losses.
   4. Make air quantity measurements in main ducts and for outside air by Pitot tube traverse of entire cross sectional area of duct.
   5. Measure air quantities at air inlets and outlets.

C. Diffusers, Registers and Grilles:
   1. Adjust air distribution to obtain uniform space temperatures free from objectionable drafts.
   2. Use volume control devices to regulate air quantities only to the extent that the adjustments do not create objectionable air motion or sound levels.
   3. Effect volume control by using volume dampers located in ducts.

D. Provide system schematic:
   1. Identify the location and area of each grille, diffuser, register, and terminal box.

2. Record the required and actual air quantities at each outlet or inlet.
3. Record size, type, and manufacturer of each diffuser, grille, and register on air outlet data sheets.

E. Air Temperature:
1. Measure wet and dry bulb air temperatures on entering and leaving side of each cooling coil and unit in cooling mode.
2. Measure dry bulb temperatures on entering and leaving side of each heating coil and unit in heating mode.

F. Pressure:
1. Measure static pressure conditions on air units, including filter and coil pressure drops, and total pressure across fan with suction and discharge pressures.
2. Make air balancing allowances for 50 percent loading of filters.
3. Measure building static pressure.

G. Electrical:
1. Record nameplate motor current and voltage.
2. Measure actual motor current and voltage at balanced condition.

H. Dampers:
1. Adjust outside air, return air, and exhaust dampers for design conditions.
2. At modulating damper locations, take measurements and balance at extreme conditions.

I. Permanently mark all outside air, supply air, and return air damper positions after balancing has been completed.

J. Smoke testing, or some other approved means, may be required to determine leak locations if air balance report indicated that any system's CFM total is less than 10 percent of design CFM. Prior to test, verify that system's duct joints have been sealed as specified and that air moving device in question is supplying required design system air flow. Architect will approve test method required. If smoke test is selected, use following procedure. Provide necessary precautions to protect those performing or observing test from being exposed to smoke.
1. Use zinc chloride smoke candles, titanium tetrachloride ampules or sticks, or other devices acceptable to Architect to generate smoke.
2. Close openings in duct except for one opening at farthest end of duct run.
3. If re-balancing is required, submit revised air test and balance reports to Architect before Substantial Completion.
4. Spot balance and rebalance shall be performed at no additional cost to Owner.

3.7 FINAL INSPECTION AND ADJUSTMENTS

A. System shall be balanced and reports submitted before substantial completion inspection.

B. Balancing Agency shall be represented at inspection meeting(s) by qualified testing personnel with balancing equipment and two copies of current air balancing test report.
1. Architect will choose and direct spot balancing. Differences greater than specified tolerance between the spot balance and test report will be justification for requiring repeat of testing and balancing for entire building and submission of a new test report. In such case a new inspection will be made.
2. Perform rebalancing in presence of Architect/Engineer and subject to their approval.

3. If re-balancing is required, submit revised air test and balance reports to Architect before Substantial Completion.
4. Spot balance and rebalance shall be performed at no additional cost to Owner.

C. Where systems provides over 5 percent more air than schedule requirements, rooms supplied by that system shall have their supply air quantities increased by ratio of actual total air quantity supplied to minimum air quantity required by system schedule.

3.8 SUPPLEMENTAL WARRANTY

A. Test and balance agency shall include an extended warranty of 90 days, after occupancy, during which the Owner's representative, at his discretion, may request a recheck or resetting of any outlet, supply air or exhaust fan, as listed in test report.

END OF SECTION

SECTION 23 07 00 - HVAC INSULATION

PART 1 GENERAL

1.1 SUMMARY

A. Section Includes:
1. Piping system insulation.
2. Equipment insulation.
3. Pipe insulation jackets.
4. Equipment insulation jackets.
5. Insulation accessories including vapor retarders and accessories.
6. Ductwork insulation.
7. Ductwork insulation jackets.
8. Duct liner.

1.2 QUALITY ASSURANCE

A. Insulation must have maximum flame spread index of 25 and maximum smoke developed index of not exceeding 50 in accordance with ASTM E84.

B. All systems components subject to heat loss or gain, such as, piping, storage tanks, vessels, valves etc. shall be insulated to conform with the Washington State Energy Code (as minimum) and this section.

1.3 IDENTIFICATION

A. Insulation shall bear a manufacturer's mark indicating the product R-value, or K-value and thickness. This mark shall be visible after installation and shall be repeated at an interval of no greater than 10 feet.

B. External duct insulation shall be legibly printed or identified at intervals not greater than 36 inches with name of manufacturer, R-value, thickness, flame spread and smoke-developed index.

C. R-values shall be based on insulation at 75 F mean temperature difference.

D. For rigid or spray foam the aged R-value per inch shall be provided in submittals.

1.4 REQUIREMENTS

A. Where multiple products are listed for the same application, select a single product to provide throughout.

B. For round and flat oval ductwork use only liner specific for round application. Using flat liner is not acceptable.

PART 2 PRODUCTS

2.1 POLYOLEFIN INSULATION

A. Manufacturers: IMCOA or similar.

B. Polyolefin or Polyethylene pipe insulation is **NOT ACCEPTABLE** for any application.

2.2 ELASTOMERIC CELLULAR FOAM (PIPE)

A. Manufacturers: Armacell AP/Armaflex, Aeroflex Aerocel or approved equal.

B. Preformed flexible, closed-cell, elastomeric thermal insulation: Type I, Tubular form, self-seal or continuous, 25/50-rated, CFC free, low VOC, 'K' factor: 0.27 at 75 degrees F. ASTM C534.

C. Rigid clamp/hanger insert: Armacell Armafix, polyurethane insert and aluminum jacket, single piece with self-adhering closure.

2.3 FLEXIBLE GLASS FIBER DUCT LINER (SOUND LINER)

A. Manufacturers: Johns Manville Linacoustic RC or equal by Knauf, Manson or approved equal.

B. Description: Flexible duct liner, glass fiber bonded with thermosetting resin, airstream surface protected with reinforced coating.
1. ASTM E84, UL 723
2. Installed R Value: 1" R-4.2, 2” R-8.0
3. Maximum service temperature: 250 degrees F.
4. Maximum Velocity on Coated Air Side: 6,000 fpm.
5. Acrylic polymer coating to prevent dust incursion and biological growth.

C. Liner Fasteners: Galvanized steel, impact applied or welded with integral head.

D. Field coat edges with Superseal edge treatment.

2.4 ELASTOMERIC CELLULAR FOAM DUCT LINER (SOUND LINER)

A. Manufacturers: Armacell AP/Coilflex or approved equal.

B. Description: Fiber-free, non-particulating, formaldehyde-free, low VOC elastomeric form roll which conforms to duct corners without compression. Microban antimicrobial protection inhibits mold and mildew.
1. ASTM E84, UL 723
2. Installed R Value: 1” R-4.2, 1-1/2” R-6.0
3. Maximum service temperature: 180 degrees F
4. Maximum velocity: 10,000 fpm.

C. Install as a cross-section single piece fitting around corners.

D. Apply with water based adhesive.

2.5 POLYESTER DUCT LINER (SOUND LINER)

A. Manufacturers: Ductmate PolyArmor or approved equal.

B. Description: Fiberglass free, hypoallergenic polyester blanket with FSK facing.
1. ASTM E84, UL 723
2. Installed R Value: 1” R-4.2, 1-1/4” R-5, 1-1/2” R-6.0, 2” R-8.0
3. Maximum service temperature: 250 degrees F
4. Maximum velocity: 4,000 fpm.

C. Provide metal nosing and water based edge coating.

D. Apply with water based adhesive and pins.

2.6 GLASS FIBER ROUND DUCT LINER (SOUND LINER)

A. Manufacturers: Johns Manville Spiracoustic Plus or equal by Knauf, Manson or approved equal.

B. Description: High-density fiber glass board with kerfs; acrylic polymer meeting ASTM G21 impregnated surface coat. ASTM C1071.
1. 'K' factor: 0.23 at 75 degrees F.
2. Installed R Value: 1" R-4.3, 2" R-8.4
3. Maximum service temperature: 250 degrees F.
4. Maximum Velocity on Coated Air Side: 4,000 fpm.

2.7 ELASTOMERIC CELLULAR FOAM ROUND DUCT LINER (SOUND LINER)

A. Manufacturers: Armacell AP/Spiralflex or approved equal.

B. Description: Fiber-free, non-particulating, formaldehyde-free, low VOC elastomeric form roll which is self-supporting and conformable to round duct. Microban antimicrobial protection inhibits mold and mildew.
1. ASTM E84, UL 723
2. 'K' factor: 0.28 at 75 degrees F
3. Installed R Value: 1" R-4.2
4. Maximum service temperature: 180 degrees F
5. Maximum velocity: 10,000 fpm.

2.8 GLASS FIBER DUCT WRAP

A. Manufacturers: Johns Manville Microlite XG 75 or equal by Owens-Corning, Knauf, Manson or approved equal.

B. Description: Formaldehyde-free, flame-attenuated glass fibers bonded with thermosetting acrylic resin, FSK facing.
1. 'ASTM E84, UL 723
2. Installed R Value: 1-1/2" R-4.2, 2" R-5.6, 2.5" R-6, 3" R-8.3, 4.5" R-12, 5.75" R-16.
3. Maximum Service Temperature: 250 degrees F.
4. Density: 0.75 lb/cu ft

C. Vapor Retarder Jacket: Reinforced FSK facing. Seal with pressure sensitive 2" tape.

D. Identification: At intervals not greater than 36" print the name of manufacturer, the thermal resistance R-value at insulation thickness, the flame spread and smoke developed indexes.

2.9 PIPE INSULATION AND EQUIPMENT JACKETS

A. PVC Plastic Pipe Jacket:
1. Product Description: One piece molded type fitting covers and sheet material, white color. ASTM D1784.
2. Thickness: 15 mil indoor, 30 mil outdoor.
3. Connections: Brush on welding adhesive.

B. Canvas Equipment Jacket:
1. Fabric: 6 oz/sq yd, plain weave cotton.

2. Composite of insulation, jacket and laces.

C. Aluminum Pipe Jacket:
1. Thickness: 0.016 inch thick sheet. ASTM B209.
2. Finish: Embossed
3. Joining: Longitudinal slip joints and 2 inch laps.
4. Fittings: 0.016 inch thick die shaped fitting covers with factory attached protective liner.
5. Metal Jacket Bands: 3/8 inch wide; 0.015 inch thick aluminum.

PART 3 EXECUTION

3.1 EXAMINATION

A. Verify piping and equipment has been tested before applying insulation materials.

B. Verify surfaces are clean and dry, with foreign material removed.

3.2 INSTALLATION

A. Apply insulation when building is thoroughly dry to prevent shrinkage.

B. Exposed Piping: Locate insulation and cover seams in least visible locations.

C. Insulate entire piping system including fittings, valves, unions, flanges, strainers, flexible connections, pump fittings, connections to equipment and expansion joints. Use canvas jackets for valves and other irregular shapes.

D. Insulate flanges and unions with removable sections and jackets.

E. Piping Inserts and Shields:
1. Insulation shall be continuous through supports and hangers with incompressible inserts and shields. Do not directly clamp/support pipe scheduled to be insulated.
2. Shields: Galvanized steel saddle between pipe clevis hangers or pipe rollers and insulation. Minimum 6 inches long, of contour matching adjoining insulation; may be factory fabricated.
3. Inserts: Between pipe clamps, hangers or rollers and piping.
4. Insert material: Compression resistant insulating material suitable for insulation type and planned temperature range and service.
5. Glue insulation to both sides of insert.
6. Shields without inserts may be used at clevis hangers on refrigerant piping 5/8” and smaller with continuous insulation.

F. Continue insulation through penetrations of building assemblies or portions of assemblies having fire resistance rating of one hour or less. Provide intumescent firestopping when continuing insulation through assembly. Finish at supports, protrusions, and interruptions.

G. Pipe Exposed in Mechanical Equipment Rooms or Finished Spaces: Finish with PVC jacket and fitting covers.

H. Exterior Piping Applications: Use only elastomeric closed-cell foam insulation. Insulate fittings, joints, and valves with insulation of like material and thickness as adjoining pipe, and finish with sealant. Cover with aluminum jacket with seams located at 3 or 9 o’clock position on side of horizontal piping with overlap facing down to shed water or on bottom side of horizontal equipment.

I. Exposed Equipment: Locate insulation and cover seams in least visible locations.

J. Apply insulation close to equipment by grooving, scoring, and beveling insulation. Fasten insulation to equipment with studs, pins, clips, adhesive, wires, or bands.

K. Fill joints, cracks, seams, and depressions with bedding compound to form smooth surface. On cold equipment, use vapor retarder cement.

L. Finish insulation at supports, protrusions, and interruptions.

M. Nameplates and ASME Stamps: Bevel and seal insulation around; do not insulate over.

N. Equipment Requiring Access for Maintenance, Repair, or Cleaning: Install insulation/lagging with removable sections for easy removal and replacement without damage. Label removable sections indicating access type, i.e. “Filter Access”.

O. Insulate exhaust air ductwork where it is outside the insulated building envelope to prevent condensation.

P. For all insulated ductwork:
1. Provide insulation with vapor retarder jackets.
2. Finish with tape and vapor retarder jacket.
3. Continue insulation through walls, sleeves, hangers, and other duct penetrations.
4. Insulate entire system including fittings, joints, flanges, fire dampers, flexible connections, and expansion joints.

Q. Ductwork Exposed in Mechanical Equipment Rooms or Unfinished Spaces: Finish with canvas jacket over duct insulation, sized for finish painting.

R. Duct and Plenum Liner Application:
1. Adhere insulation with adhesive for 100 percent coverage.
2. Secure insulation with mechanical liner fasteners. Comply with SMACNA Standards for spacing.
3. Seal and smooth joints. Seal and coat transverse joints.
4. Seal liner surface penetrations with adhesive.
5. Duct dimensions indicated are net inside dimensions required for airflow. Increase duct size to allow for insulation thickness.

3.3 SCHEDULES

A. Piping: Provide on piping as listed below.

		PIPE SIZE			
Service	**Insulation Type**	**<1”**	**1” to <1-1/2"**	**1-1/2 to < 4"**	**4" to < 8”**
Refrigerant Suction(1)	Elastomeric Cellular FOAM	1"	1"	1-1/2"	-
Refrigerant Hot Gas	Elastomeric Cellular FOAM	1"	1"	1-1/2"	-

1. Note: Insulate Refrigerant Liquid lines same as Suction lines on all heat pump equipment, where noted by manufacturer or called for on plans.
2. For all exterior piping applications use only Elastomeric Cellular Foam with Aluminum jacket.

3. For all below grade piping application use only insulation specifically engineered for application. (Closed Cell Polyurethane System)

B. Ductwork: Provide on ductwork as listed below. Insulation thickness is provided as reference; each application must meet minimum installed R-Value.

Service	Location	Insulation Type	Approx. Thickness	Min. Installed R-Value	Jacket
Supply, Return	Building Exterior (Zone 4C)	Duct Liner	3"	R-8	-
Exhaust (ERV Intake)	Building Exterior (Zone 4C)	Duct Liner	3"	R-8	-
Supply, Return	Attic, crawlspace, parking garage or uninsulated area within building. (Zone 4C)	Duct Wrap	3"	R-8	FSK
Supply, Return, Exhaust	Unconditioned space inside building envelope.	Duct Wrap	2.5"	R-6	FSK
Supply	Concealed Space (3)	Duct Wrap	1-1/2"	R-3.3	FSK
Supply	Exposed (4) in Space With Supply Air Temp ≤55 F or ≥105 F	Duct Liner	1-1/2"	R-3.3	FSK
Supply	Exposed in Space With Supply Air Temp Between 56-104F	None, Except Duct Liner shown on Plans.			
Outside Air (5)	Within Building downstream of damper. <2800 cfm	Duct Wrap / Duct Liner	3"	R-8	FSK
Outside Air (5)	Within Building downstream of damper. >=2800 cfm (Zone 4C)	Duct Wrap / Duct Liner	3"	R-8	FSK
Outside Air (5)	Within Building Between damper & building exterior. >=2800 cfm	Duct Wrap / Duct Liner	5.75”	R-16	FSK
Outside Air (ERV supply)	Between ERV & building spaces	Duct Wrap / Duct Liner	1-1/2"	R-3.3	FSK
Exhaust Air (Environmental Air)	Attic, crawlspace, parking garage or uninsulated area within building.	Duct Wrap	2.5"	R-6	FSK
Exhaust Air (Environmental Air)	Within Building upstream of damper.	None, Except Duct Liner shown on Plans.			

Exhaust Air (Environmental Air)	Building exterior	None			
Relief / Exhaust Air	Between damper & building exterior. <2800 cfm	Duct Wrap	3”	R-8	FSK
Relief / Exhaust Air	Between damper & building exterior. >=2800 cfm	Duct Wrap	5.75”	R-16	FSK
Exhaust Air (ERV Discharge)	Indoor between ERV & building exterior. (Zone 4C)	Duct Wrap	3"	R-8	FSK

1. Secure duct wrap with mechanical fasteners spaced 12” on center, minimum. For horizontal ducts 24” or more in width, duct wrap shall also be secured with mechanical fasteners spaced 18” on center, on centerline of bottom of duct.
2. External insulation is not required on internally sound lined ductwork with sufficient insulating value. For internally insulated ductwork, the required insulation thickness supersedes sound lining requirements.
3. Concealed space: Any space within the insulated building envelope that is concealed from view, i.e. behind ceiling, wall, shaft, soffit, etc.
4. For exposed ductwork in finished spaces which is required to be insulated provide internal liner with equivalent R-value.
5. In addition to the insulation requirements, outside air ductwork shall meet all air leakage and building envelope insulation requirements of the WSEC C402 and building envelope vapor control requirements from the IBC.

C. Equipment: Provide on equipment as listed below.

Service	Insulation Type	Thickness	R-Value	Jacket
Valves, Strainers and other refrigerant piping accessories	Glass Fiber BLANKET	Per pipe schedule	-	Canvas bag with wire ties.

END OF SECTION

SECTION 23 08 00 - PROJECT COMMISSIONING

PART 1 GENERAL

1.1 SUMMARY

A. Section Includes:
1. Project commissioning description.
2. Project commissioning responsibilities.
3. Project commissioning documentation.
4. Commissioning Compliance Checklist

1.2 GENERAL

A. The goal of the commissioning process is to verify the proper operation, functionality and control of building systems and equipment. The by-product of this process is the commissioning plan and report which provides a confirmation record of procedures used and results obtained. The effort and goal is focused on having all systems operating efficiently and correctly.

B. The mechanical contractor shall retain a Commissioning Agent (CA) and commissioning services from one of the following companies or approved equal.
1. AIRTEST Co., Inc. 425-313-0172
2. Neudorfer Engineers, Inc. 206-621-1810

C. The mechanical contractor is responsible for the commissioning process with required documentation and shall furnish labor and material directly or through the Commissioning Agent to accomplish building commissioning as specified herein.

D. The mechanical contractor is responsible to correct deficiencies discovered during the commissioning process.

1.3 COMMISSIONING DESCRIPTION

A. The purpose of the commissioning process is to provide Owner assurance that the systems have been installed in the prescribed manner and will operate within the performance guidelines. Commissioning is intended to enhance the quality of system start-up and aid in the orderly transfer of systems to beneficial use by the Owner.

B. Commissioning includes complete and thorough investigations of mechanical systems to ensure proper installation and operation of all components and systems. It consists of but is not limited to the following elements:
1. The Commissioning Plan
2. Testing and startup of HVAC equipment and systems.
3. Testing and startup of any appropriate plumbing systems, such as water heating plants, circulation pumps and sewage ejectors.
4. Equipment control and system verification checks.
5. Air balancing.
6. Functional performance testing.
7. Sequence of operations testing.
8. Completion of record drawings.
9. Owner training.
10. Operation & Maintenance materials.
11. Preliminary Commissioning Report with deficiencies noted.
12. Final Commissioning Report with corrective actions taken.

1.4 COMMISSIONING AGENT

A. The Commissioning Agent (CA) is the person who manages the commissioning process, prepares the Commissioning Plan, schedules and coordinates commissioning activities in execution of the Commissioning Plan and compiles the Commissioning Report.

B. The CA may directly perform commissioning functions and documentation or may observe tasks assigned to others.

C. The CA provides the Owner an unbiased, objective view of the system's installation, documentation, operation, and performance.

D. The CA will observe the Commissioning procedures and results performed by the Contractor. The Contractor is expected to verify the functional readiness of systems to be tested prior to performing the tests in the presence of the Commissioning Agent.

1.5 COMMISSIONING SUBMITTALS

A. See 23 00 00.

B. Commissioning Plan: Submit copies with mechanical submittals.
1. Narrative description of activities.
2. Start-up test procedure and checklists
3. Functional performance test checklists.
4. Commissioning schedule

C. Preliminary Commissioning Report: Submit three (3) copies at substantial completion.
1. Complete start-up checklists
2. Complete functional test reports
3. Test & Balance report
4. Deficiency report
5. Commissioning Compliance Checklist

D. Final Commissioning Report: Submit three (3) copies at project close out.
1. Preliminary Commissioning Report contents
2. Record drawings
3. Owner training report
4. Deficiency & corrective action report
5. O&M manuals

E. Complete the Commissioning Compliance Checklist and submit with the Preliminary Commissioning Report for Owner Representative review and signature. Signed checklist is required for final mechanical inspection and building certificate of occupancy. A copy of the signed checklist shall be provided to the building official.

1.6 QUALITY ASSURANCE

A. Perform Work in accordance with NEBB or AABC.

B. Perform Work in accordance with ASHRAE Guideline 1.

C. Perform Work in accordance with Commercial Energy Code Section C408.

1.7 COMMISSIONING MEETINGS

A. The CA shall schedule a preliminary commissioning meeting to review the commissioning plan and schedule approximately two weeks prior to the start of commissioning work. The General Contractor, Mechanical Contractor, Electrical Contractor and Electrical Commissioning Agent, applicable sub-contractors and the Engineer shall be invited.

B. The CA shall schedule additional commissioning meetings as necessary for coordination or information with the required participants.

C. The General Contractor, Mechanical Contractor and Mechanical Sub-Contractors are required to attend commissioning meetings when requested by the CA or Engineer.

1.8 SCHEDULING

A. The CA shall prepare a schedule indicating anticipated start dates for the following:
1. Piping systems pressure testing (domestic, gas, hydronic, refrigerant).
2. Piping system flushing and cleaning.
3. Ductwork cleaning.
4. Ductwork pressure testing.
5. Equipment and system startups.
6. Automatic temperature control system checkout.
7. Testing, adjusting, and balancing.
8. Functional performance tests
9. System orientation and training.
10. Operation and maintenance manual submittals.

B. Schedule seasonal tests of equipment and systems during peak weather conditions (actual or simulated) to observe full-load performance.

C. Schedule occupancy sensitive tests during conditions of both minimum and maximum occupancy use.

D. Schedule such that the Preliminary Commissioning Report can be submitted to the Owner for review with written acceptance obtained prior to the final mechanical inspection and the building certificate of occupancy.

E. Within 90 days of receipt of the building certificate of occupancy, the Record Drawings, O&M Manuals, Final Balancing Report, Final Commissioning Report and documentation of completed Owner Training shall be submitted for review.

1.9 COORDINATION

A. The mechanical contractor shall verify the commissioning schedule and notify the Commissioning Agent a minimum of two weeks in advance of the following:
1. Scheduled equipment and system startups.
2. Scheduled automatic temperature control system checkout.
3. Scheduled start of testing, adjusting, and balancing work.
4. Commissioning schedule changes.

B. Coordinate programming of automatic temperature control system with construction and commissioning schedules.

C. Coordinate commissioning of this section with Electrical commissioning.

D. Provide overall coordination and management of the commissioning program as specified herein. The commissioning process will require cooperation of the Contractor, subcontractors, vendors, Architect, Commissioning Agent, and Owner. The commissioning team shall be comprised of the following:
1. Contractor
2. Project Manager
3. Test & Balance Engineer
4. Subcontractors
5. Commissioning Agent
6. Project Engineers
7. Owner Representative(s)
8. Architect
9. Mechanical Consultant
10. Electrical Consultant

PART 2 DOCUMENTATION

2.1 COMMISSIONING PLAN

A. The Commissioning Plan shall be prepared and executed by the Commissioning Agent and at a minimum contain the following.

B. The Commissioning Plan shall be in a hard-backed loose-leaf binder with typewritten or printed index and tabbed dividers between principal categories.
1. Spine: Name of Project
2. Cover: Name of Project, Owner, Location & Commissioning Agent
3. Project Directory: Owner, Architect, Engineer, Commissioning Agent, General Contractor, Mechanical Contractor(s), Plumbing Contractor, Electrical Contractor, Test & Balance Contractor, Controls Contractor.
4. Responsible Party: Include responsible party for each contractor.

C. Narrative:
1. Describe building size, type of use and occupancy.
2. Provide an overview of the building equipment, systems, controls and their functionality.
3. Describe the activities involved in each phase of the commissioning process, including the personnel intended to accomplish each task.

D. Roles and Responsibilities:
1. Define the tasks necessary to complete the commissioning process and assign responsibility for each to a member of the commissioning team.

E. Commissioning Schedule:
1. Provide timeline of commissioning process tasks and information submittals with milestones for general scopes of work.
2. Include task for sub-contractors, contractors, vendors and CA.
3. Include owner training schedule.

F. Start-up Test Procedure and Checklists:
1. Include a list of all equipment and systems to be tested.
2. Intent: To test individual equipment for standalone function and operation.
3. Use manufacturer's startup checklist when available.
4. Utilize vendor startup and checklists for specific equipment when available.

G. Functional Performance Test checklists:
   1. Intent: To test system performance and operation including controls, relays and sequences.
   2. Include tests for all functions noted in Sequence of Operations.
   3. Indicate conditions under which the test needs to be performed.
   4. Indicate the measured criteria required to meet the performance.
   5. Include space on forms to note deficiencies.

2.2 FUNCTIONAL PERFORMANCE TESTING

A. Demonstrate the correct installation and operation of each component, system, and system-to-system intertie relationship. Control systems shall be tested to ensure that control devices, components, equipment and systems are calibrated, adjusted and operate in accordance with the sequence of operation.

B. Test all system modes and all functions describe in the Sequence of Operations.

C. Test systems under full-load, part-load (if applicable) and emergency conditions (if applicable).

D. Test any redundant or automatic back-up mode.

E. Test performance of all alarms and safeties.

F. Test mode of operation upon loss of power and power restoration.

G. Independently test all similar systems. Sampling reference systems is not acceptable.

H. Physically verify by visual inspection or calibrated meter reading the operation being tested. Control system displays shall not be used as proof of function.

2.3 PRELIMINARY COMMISSIONING REPORT

A. The Preliminary Commissioning Report shall be assembled and produced by the Commissioning Agent with information obtained from the Mechanical Contractor, Controls Contractor and Test & Balance Contractor. The report shall contain the following.

B. The Commissioning Report shall be in hard-backed loose-leaf binder(s) with typewritten or printed index and tabbed dividers between principal categories.
   1. Spine: Name of Project
   2. Cover: Name of Project, Owner, Location & Commissioning Agent
   3. Project Directory: Owner, Architect, Engineer, Commissioning Agent, General Contractor, Mechanical Contractor(s), Test & Balance Contractor, Controls Contractor.

C. System Description: Describe building systems and their intended function(s). Include equipment associated with each system.

D. Test & Balance Report: See 23 05 93

E. Start-up Test Checklists: Include completed start-up checklists.

F. Functional Performance Test Checklists:
   1. Include completed functional performance checklists.
   2. Include sequence of operations checklists.

3. Record conditions under which the tests were performed.
4. Record the measured criteria.

G. Deferred tests: Indicate any tests not performed due to climatic conditions with anticipated date of completion.

H. Deficiency Report: Compile any deficiencies noted on start-up or functional performance tests on to a single report.

I. Owner Training: Include documentation of owner operating and maintenance instruction completed to date. See section 23 00 00.

J. Commissioning Compliance Checklist: This checklist included at the end of this section shall be completed and included for Owner review and signature.

2.4 FINAL COMMISSIONING REPORT

A. The Final Commissioning Report shall be assembled and produced by the Commissioning Agent with information obtained from the Mechanical Contractor, Controls Contractor and Test & Balance Contractor. The Final Commissioning Report shall contain all the information provided in the Preliminary Commissioning Report and the following.

B. The Commissioning Report shall be in hard-backed loose-leaf binder(s) with typewritten or printed index and tabbed dividers between principal categories.
1. Spine: Name of Project
2. Cover: Name of Project, Owner, Location & Commissioning Agent
3. Project Directory: Owner, Architect, Engineer, Commissioning Agent, General Contractor, Mechanical Contractor(s), Test & Balance Contractor, Controls Contractor.

C. Test & Balance Report: Provide updated and/or corrected report if required.

D. Deficiency and Corrective Action Report: Include the deficiency report from the Preliminary Commissioning Report with the corrective action taken noted for each entry.

E. Owner Training: Include documentation of completed owner operating and maintenance instruction. See section 23 00 00.

F. Record Drawings: Include contractor's record drawings in each copy of the commissioning report. See section 23 00 00.

G. Operating and Maintenance Manuals: Include contractor's O&M manuals with each copy of the commissioning report. (Separate binders are OK) See section 23 00 00.

PART 3 EXECUTION

3.1 GENERAL

A. Contractor shall provide an individual to accompany the Commissioning Agent to assist, operate and/or make adjustments as necessary.

B. Contractor shall provide ladders, scaffolding, additional dampers and clean filters as required.

C. Contractor shall put all systems and equipment into operation and shall continue operation until all adjusting, balancing, testing, demonstrations, and instructions have been completed.

D. Commissioning shall not begin until systems are completed, in good working order and have been cleaned.

E. Check motors for proper rotation, coupling and drive alignment, belt tension and freedom from vibration, etc.

3.2 INSTALLATION

A. Contractor shall provide additional balancing dampers, balancing valves, access doors, test ports, and pressure and temperature taps required by Commissioning Agent or to address Commissioning deficiency.

B. Contractor shall provide replacement sheaves and belts to obtain system performance.

C. Contractor shall install test holes in ductwork and plenums as requested by Commissioning Agent for taking air measurements. Seal test holes after measurements.

D. Prior to start of functional performance testing, Contractor shall install clean filters in equipment.

3.3 DEFICIENCIES

A. The Commissioning Agent shall report all observed system deficiencies to the Architect and General Contractor and shall include them in the Preliminary Commissioning Report.

B. The Contractor shall rectify all deficiencies, detail the corrective action(s) taken on each item, initial each item of the report as "corrected" and return the deficiency report.

C. Upon receipt of the return report, the Commissioning Agent will visit the site and inspect the corrected deficiencies. The Commissioning Agent will also initial the items of the report as "checked" and include them in the Final Commissioning Report.

D. Further site visits by the Commissioning Agent to check deficiencies not corrected in back check, will be at the Contractor’s expense.

END OF SECTION

COMMISSIONING COMPLIANCE CHECKLIST

Project Information	**Project Name:** **Project Address:** **Commissioning Authority:**
Commissioning Plan (Section C408.1.1)	❑ **Commissioning Plan was used during construction and included items below** • A narrative description of activities and the personnel intended to accomplish each one • Measurable criteria for performance • Functions to be tested
Systems Balancing (Section C408.2.2)	❑ **Systems Balancing has been completed** • Air and Hydronic systems are proportionately balanced in a manner to first minimize throttling losses • Test ports are provided on each pump for measuring pressure across the pump.
Functional Testing (Sections C208.2.3, C408.3.1, C408.4.1.3 and C408.5.1)	❑ **HVAC Equipment Functional Testing has been completed** (Section C408.2.3.1) HVAC equipment has been tested to demonstrate the installation and operation of components, systems and system-to-system interfacing relationships in accordance with approved plans and specifications ❑ **HVAC Controls Functional Testing has been completed** (Section C408.2.3.2) HVAC controls have been tested to ensure that control devices are calibrated, adjusted and operate properly. Sequences of operation have been functionally tested to ensure they operate in accordance with approved plans and specifications ❑ **Economizer Functional Testing has been completed** (Section C408.2.3.3) Economizers operate in accordance with manufacturer's specifications ❑ **Lighting Controls Functional Testing has been completed** (Section C408.3.1) Lighting controls have been tested to ensure that control devices, components, equipment, and systems are calibrated, adjusted and operate in accordance with approved plans and specifications ❑ **Service Water Heating System Functional Testing has been completed** (Section C408.4.1) Service water heating equipment has been tested to ensure that control devices, components, equipment, and systems are calibrated, adjusted, and operate in accordance with approved plans and specifications ❑ **Pool and Spa Functional Testing has been completed** (Section C408.4.1.3) Pools and spas have been tested to ensure service water heating equipment, time switches and heat recovery equipment are calibrated, adjusted and operate in accordance with approved plans and specifications ❑ **Metering System Functional Testing has been completed** (Section C408.5.1) Energy source meters, energy end-use meters, the energy metering data acquisition system and required display are calibrated, adjusted and operate in accordance with approved plans and specifications
Supporting Documents (Section 408.1.3.2)	❑ **Manuals, record documents and training have been completed or are scheduled** • System documentation has been provided to the owner or scheduled date:_____ • Record documents have been submitted to owner or scheduled date:_____ • Training has been completed or scheduled date:_____
Commissioning Report (Section C408.1.2)	❑ **Preliminary Commissioning Report submitted to Owner and includes items below.** • Deficiencies found during testing required by this section which have not been corrected at the time of report preparation • Deferred tests, which cannot be performed at the time of report preparation due to climatic conditions
Certification	❑ I hereby certify that all requirements for commissioning have been completed in accordance with the Washington State Energy Code, including all items above. _____ Building Owner or Owner's Representative Date

SECTION 23 09 00 - INSTRUMENTATION AND CONTROL FOR HVAC

PART 1 GENERAL

1.1 SUMMARY

A. Section Includes:
1. Thermostats
2. Electric actuators.

1.2 SCOPE

A. The mechanical contractor shall install a complete, properly adjusted, and effective temperature control system.

B. This section includes field assembled instrumentation and temperature controls for air conditioning, heating, ventilation, and exhaust systems.

C. See drawings for Sequence of Operation.

D. See Equipment Schedules and associated specification sections for controls integral to HVAC equipment.

E. Controls shall be electric/electronic systems.

F. Manufacturers of components shall be as specified, Honeywell, or approved.

G. Any additional parts necessary to or incidental for a complete and operating system shall be the responsibility of the contractor.

1.3 MAINTENANCE SERVICE

A. Furnish service and maintenance of control system for one year from Date of Substantial Completion.

B. Furnish complete service of controls systems, including callbacks and service calls.

C. Furnish two complete inspections per year, one in each season, to inspect, calibrate, and adjust controls. Submit written report after each inspection.

D. Include systematic examination, adjustment, and lubrication of unit, and controls checkout and adjustments. Repair or replace parts in accordance with manufacturer's operating and maintenance data. Use parts produced by manufacturer of original equipment.

E. Perform work without removing units from service during building normal occupied hours.

F. Provide emergency call back service during working hours for this maintenance period.

G. Maintain locally, near Place of the Work, adequate stock of parts for replacement or emergency purposes. Have personnel available to ensure fulfillment of this maintenance service, without unreasonable loss of time.

H. Perform maintenance work using competent and qualified personnel under supervision and in direct employ of manufacturer or original installer.

1.4 QUALITY ASSURANCE

A. Control Air Damper Performance: Test in accordance with AMCA 500.

1.5 SUBMITTALS

A. Provide submittal to include one PDF of control components, control diagrams and operational sequences.

PART 2 PRODUCTS

2.1 THERMOSTATS

A. Manufacturers: Honeywell (or as noted below) or approved equal.

B. Bi-metal thermostats are not allowed for any application.

C. Low Voltage Heating/Cooling Thermostat (Electronic Programmable): TH2110D
1. Sensor Element: Thermistor.
2. Accuracy: +/- 1 degrees F.
3. 24 VAC or 750 mV control.
4. LCD backlight display.
5. Dual powered battery/hardwire.

D. Room Thermostat Accessories:
1. Insulating Bases: For thermostats located on exterior walls.
2. Thermostat Guards: Locking transparent plastic mounted on separate base.
3. Adjusting Key: Matching device.

E. Air-stream Thermostats:
1. Remote bulb or bimetallic rod and tube type, proportional action with adjustable setpoint in middle of range and adjustable throttling range.
2. Averaging service remote bulb element: 20 feet.

2.2 CONTROL AIR DAMPERS

A. See Section 23 33 00.

2.3 ELECTRIC DAMPER ACTUATORS

A. Manufacturers: Belimo or approved equal.

B. Operation: Two-position, proportional or reversing type as required for application, spring-return.

C. Enclosure Rating: NEMA 250 Type 2 Enclosure.

D. Mounting: Direct mount.

E. Stroke: 30 seconds end to end full stroke, 15 seconds return to normal for spring return.

F. Protection: Electronic stall protection.

G. Control Input: 0-10 VDC or 0-20 mA DC.

H. Power: Nominal 24 \ 120 volt AC.

I. Torque: Size for minimum 150 percent of required duty.

J. Duty cycle: rated for 65,000 cycles.

K. Accessories:
1. Cover mounted transformer.
2. Auxiliary potentiometer.
3. Damper linkage.
4. Direct drive feedback potentiometer.
5. Output position feedback.
6. Field selectable rotational, spring return direction, field adjustable zero and span.
7. End switch.

2.4 ENCLOSURES

A. All enclosures to be UL listed and all metal construction. All controls and instruments logically assembled at one or more panels.

2.5 CONTROL RELAYS

A. Manufacturers: Functional Devices RIB or approved equal.

B. Shall be rated for the application, with a minimum of two sets of Form C contacts, enclosed in a dust proof enclosure. Relays shall be rated for a minimum life of one million operations. Operating time shall be 20 milliseconds or less, with release time of 10 milliseconds or less. Relays should be equipped with coil transient suppression devices to limit transients to 150% of rated coil voltage.

2.6 WIRING

A. Electric wiring and wiring connections required for the installation of the temperature control system as herein specified, shall be provided by the temperature control contractor. All wiring shall comply with the requirements of local and national electrical codes, and with applicable requirements of Electrical Division. Install all wiring in conduit.

B. Line voltage wiring type and size shall be per NEC.

C. Low voltage wiring type and size shall be per control manufacturer's recommendations based on application and length of run.

2.7 CONTROL POWER

A. Provide transformers to supply power for control equipment operating at less than normal lighting circuit voltage. Do not connect wiring to lighting circuits.

PART 3 EXECUTION

3.1 EXAMINATION

A. Verify building systems to be controlled are ready to operate.

B. Verify air handling units and ductwork have been accepted and air filters are in place before installing sensors in air streams.

C. Verify location of thermostats, humidistats and other exposed control sensors with Drawings before installation.

3.2 COORDINATION

A. Furnish all control products to accomplish the specified sequence of operation, except those products specifically furnished under other sections.

B. Install all control products and connections, except where already installed by the equipment manufacturer.

C. Thermostats located in electrical transformer vaults shall be model approved by electrical utility.

D. Coordinate provision of door contacts for interface with mechanical controls.

3.3 INSTALLATION

A. General:
1. Install controls by mechanics skilled in erection of control systems employed by and under direct supervision of control manufacturer's representative.
2. Mount control equipment and devices as recommended by manufacturers and as shown on drawings; in case of conflicts between manufacturer's instructions and the drawings, consult the Project Manager for direction.
3. Fasten all equipment securely to structure. Install equipment and exposed piping and conduit runs parallel to building lines, plumb and level.

B. Wiring:
1. Provide line voltage and/or low voltage wiring as required to serve the complete system; conform to code.
2. Provide EMT or rigid conduit for exposed control wiring outside of cabinets or enclosures. Concealed low voltage wiring need not be in conduit, except in walls (see “3”).
3. Provide rigid conduit for control wiring concealed in partition walls, until conduit emerges from wall above ceilings.
4. Run low voltage control wiring separate from line voltage wiring and segregate from other systems to avoid Electromagnetic Interference (EMI).
5. All low voltage control wiring shall be homeruns between components without splices.
6. Select wiring gauge based on length of run and power requirement for a maximum of 10% voltage drop.

C. Install sleeves through concrete surfaces in minimum one-inch sleeves, extended 6 inches above floors and one inch below bottom surface of slabs.

D. Install thermostats, humidistat, space temperature sensors, and other exposed control sensors after locations are coordinated with other Work.

E. Install freeze protection thermostats using flanges and element holders.

F. Install outdoor reset thermostats and outdoor sensors indoors, with sensing elements outdoors with sun shield.

G. Provide separable sockets for liquids and flanges for air bulb elements.

H. Install thermostats in aspirating boxes in public areas and as indicated on Drawings.

I. Install control panels adjacent to associated equipment on vibration free walls or freestanding supports. Install engraved plastic nameplates for instruments and controls inside cabinet and engraved plastic nameplates on cabinet face.

J. Install "hand/off/auto" selector switches to override automatic interlock controls when switch is in "hand" position.

3.4 THERMOSTATS AND SENSORS

A. Mount thermostats and other human interface devises at 48” centerline above finished floor to comply with ADA accessibility per ANSI A117.1. Align thermostats and devises with light switches and other controls.

B. Coordinate wall location of thermostats and other wall mount devises with light switches and controls provided by others. All devises in the same vicinity should be grouped at a common elevation with regular horizontal spacing intervals.

3.5 FIELD QUALITY CONTROL

A. After completion of installation, start-up, test and adjust each system. Submit data showing set points, final adjustments of controls and compliance with sequence of operations.

B. Conduct functional tests on complete systems, or individual portions as approved.

C. Conduct operational tests; set controls to operating conditions, record settings and readings of each control device.

D. Work in close coordination with testing and balancing Agency to set up control devices, set damper flow rates, and provide control system in perfect operating order. See Section 23 05 93.

3.6 DEMONSTRATION AND TRAINING

A. Demonstrate complete operation of systems, including sequence of operation prior to Date of Substantial Completion.

B. Not less than 60 days after beneficial occupancy by the Owner, recheck entire control system for compliance with Sequence of Operation.

C. Recheck controls for proper operation at the start of the heating season, if other than above timing, and again during the first warm weather period following winter operation.

END OF SECTION

SECTION 23 23 00 - REFRIGERANT PIPING

PART 1 GENERAL

1.1 SUMMARY

A. Section Includes:
1. Refrigerant piping.
2. Pipe insulation protection.
3. Refrigerant moisture and liquid indicators.
4. Valves.
5. Refrigerant piping accessories.

1.2 SYSTEM DESCRIPTION

A. Where more than one piping system material is specified, provide compatible system components and joints. Use non-conducting dielectric connections when joining dissimilar metals in systems.

B. Provide flanges, unions, or couplings at locations requiring servicing. Use unions, flanges, or couplings downstream of valves and at equipment connections. Do not use direct welded or threaded connections to valves or equipment.

C. Provide receivers on systems as required by manufacturer's installation instructions, sized to accommodate pump down charge.

D. Provide receivers on systems with piping runs exceeding manufacturer's published limitations.

E. Flexible Connectors: Use at spring isolated air handlers and condensers greater than six tons.

F. Size piping in accord with equipment manufacturer's refrigerant piping design guidelines based on actual piping installation lengths. Use long line calculations when applicable.

1.3 QUALITY ASSURANCE

A. Perform Work in accordance with ASME B31.5 code for installation of refrigerant piping systems.

1.4 DELIVERY, STORAGE, AND HANDLING

A. Dehydrate and charge refrigeration components including piping and receivers, seal prior to shipment. Maintain seal until connected into system.

B. Provide temporary end caps and closures on piping and fittings. Maintain in place until installation.

C. Protect piping systems from entry of foreign materials by temporary covers, completing sections of the Work, and isolating parts of completed system.

PART 2 PRODUCTS

2.1 REFRIGERANT PIPING

A. Copper Tubing: ASTM B280, Type ACR hard drawn or annealed.
   1. Fittings: ASME B16.22 wrought copper.
   2. Joints: Braze, AWS A5.8 BCuP silver/phosphorus/copper alloy.

2.2 COPPER PRESSURE-SEAL FITTINGS FOR REFRIGERANT PIPING

A. Manufacturers: RLS – Rapid Locking System, Nibco – PressACR, or approved equal.

B. Flame-Free press fittings: UL 207 Listed. Refrigerant Grade Copper in accordance with ASTM B75 or ASTM B743. O-Rings: HNBR.

C. Tools: Manufacturer's approved special tools.

D. Ratings:
   1. Maximum Rated Pressure (MRP): 700 psig.
   2. Continuous Operating Temperature: 250 deg F.
   3. O-Ring Temperature Rating: -40 to 300 deg F.
   4. Minimum Burst Pressure in accordance with UL 207: 2100 psig.
   5. Vacuum Pressure Capability: 20 Microns.
   6. Complies with UL 109 for vibration resistance.
   7. Approved for the following oils: POE, PVE, PAG.

E. Approved Tubing Materials: Copper-to-copper connections with the following copper tubing:
   1. Hard Drawn Copper, 1/4 to 1-3/8 inch (6.4 to 35 mm): Type ACR, L, K.
   2. Soft (Annealed) Copper 1/4 to 1-3/8 inch (6.4 to 35 mm): Type ACR, L, K.

2.3 REFRIGERANT LINE SET

A. Copper Tubing: ASTM B280, annealed, Type ACR
   1. Flared ends with brass nuts and protective caps.
   2. Pre-insulated, dual tube, liquid and vapor lines with closed-cell elastomeric foam.
   3. R-410A, 700 PSI rated.

2.4 PIPE INSULATION PROTECTION

A. Manufacturers: Airex EFlex Guard or approved equal.

B. Construction: Non-laminated flexible PVC with, antifungal and UV resistant properties.
   1. Fire Performance: Testing Standard ASTM E 84 / UL 723.
   2. Rated Class “A” Material -25 Flame/450 smoke index
   3. Accelerated Weatherization and U. V. Testing Standard: ASTM G153
   4. Fungal resistance for interior & exterior: ASTM G21- “0”growth.
   5. Water/Vapor Permeability Testing Standard ASTM E96 Rated 1 ≤ perm.
   6. Rated Class II Vapor Retarder
   7. Tensile strength and Elongation for Vulcanized Rubber and Thermoplastic Elastomers ASTM D412.

C. Fasteners: No material shall be cemented or applied by adhesives.
   1. Reusable, Heavy-Duty, Dual-Bonded Velcro fasteners and U. V. Cable Ties.
   2. Velcro fasteners construction method: Molecular Fusion bonded and double stitched.

D. Color: Black or White

E. Install per Airex Manufacturing Inc. Instructions.

2.5 REFRIGERANT PIPE WALL PENETRATION GASKET SEAL

A. Manufacturers: Airex TGS or approved equal.

B. Construction: ASA (Acrylonitrile Styrene Acrylate) outdoor Polymer. High impact strength material, UV resistant, and extreme weather resistant material. UL 746C (rated F1). Built-in pitch or slope design away from the exterior wall to prevent water or moisture build-up.

C. Wall Gasket Seal System receiver shall be attached to the building wall with the use of screws for self-tapping, concrete, plaster, mortar, and all materials and to include 2,000 lbs. (psi) pull rating. The screws are to be pre-loaded with neoprene washers for an air-tight seal.

D. The wall trim receiver shall have a surface edge perimeter pre-mounted gasket for proper wall sealing and a mounted duct seal that is highly flexible and that properly receives, and seals, with an tight fit around the insulated line set with an elastomeric sleeve.

E. There shall be combined holding action by the elastomeric sleeve with an outside diameter, adjustable stainless steel clamp, to create a fully isolated, supported, sealed, and secured penetrating line set connection.

F. Installation shall be according to Airex Manufacturing installation instructions.

G. Color: Gray or White (Paintable)

2.6 UNIONS, FLANGES, AND COUPLINGS

A. Copper Pipe: Bronze, soldered joints.

2.7 REFRIGERANT MOISTURE AND LIQUID INDICATORS

A. Manufacturers: Alco Controls, Parker Hannifin, Sporlan Valve or approved equal.

B. Indicators:
1. Port: Single, UL listed.
2. Body: Copper or brass, flared or solder ends.
3. Sight glass: Color-coded paper moisture indicator and plastic cap.
4. Maximum working pressure: 500 psig
5. Maximum working temperature: 200 degrees F.

2.8 REFRIGERANT PIPING SERVICE VALVE

A. Manufacturer: Diamondback or approved equal.

B. Full port, forged brass ball valve with Schrader valve, flare connections, Teflon seals and gaskets. 700 psig rated, R-410A compatible, fully factory assembled and pressure tested.

C. Provide with insulation cover of polyethylene foam with PVC cover and tape.

PART 3 EXECUTION

3.1 PREPARATION

A. Ream pipe and tube ends. Remove burrs.

B. Remove scale and dirt on inside and outside before assembly.

C. Prepare piping connections to equipment with flanges or unions.

D. Keep open ends of pipe free from scale and dirt. Protect open ends with temporary plugs or caps.

3.2 INSTALLATION PIPING SYSTEMS

A. Route piping parallel to building structure and maintain gradient.

B. Install piping to conserve building space, and not interfere with use of space.

C. Group piping whenever practical at common elevations.

D. Sleeve pipe passing through partitions, walls and floors.

E. Protection: Where piping, other than cast iron or steel, is installed in a concealed location through holes or notches in framing (i.e. studs, joists, rafters, etc.), less than 1-1/2 from framing edge, provide shield plates. Shield plates shall be 16 gauge steel and cover the piping area within framing plus 2” on each side along framing.

F. Use rigid Armacell Armafix pipe clamp assembly at all supports.

G. Determine equivalent line length and size piping per manufacturer’s installation instructions. Provide solenoid valve and other required piping accessories for long line installation.

H. Refrigerant piping shall not be installed in elevators, public stairways, stair landing or means of egress spaces.

I. Install pipe identification.

J. Install piping to allow for expansion and contraction without stressing pipe, joints, or connected equipment.

K. Provide access where valves and fittings are not exposed.

L. Arrange refrigerant piping to return oil to compressor. Provide traps and loops in piping, and provide double risers as required. Slope horizontal piping 0.40 percent in direction of flow.

M. Flood refrigerant piping system with nitrogen during brazing. Keep piping open with nitrogen flow for zero pressure while brazing.

N. Install valves with stems upright or horizontal, not inverted.

O. Insulate piping and equipment.

P. Provide replaceable cartridge filter-dryers, with isolation valves and bypass with valve.

Q. Locate expansion valve sensing bulb immediately downstream of evaporator on suction line.

R. Provide external equalizer piping on expansion valves with refrigerant distributor connected to evaporator.

S. Install flexible connectors at right angles to axial movement of compressor, parallel to crankshaft.

T. Fully charge completed system with refrigerant after testing.

U. Follow ASHRAE 15 procedures for charging and purging of systems and for disposal of refrigerant.

V. Install refrigerant piping in accordance with ASME B31.5.

3.3 INSTALLATION-EXTERIOR PIPING

A. Protect exterior piping with application specific piping protection cover system, continuous aluminum jacket or field fabricated GSM cover with steel angle supports.

B. Provide waterproof pipe entry into building with trim and flashing.

3.4 INSTALLATION - REFRIGERANT SPECIALTIES

A. Refrigerant Liquid Indicators: Install line size liquid indicators in main liquid line downstream of condenser.

B. Refrigerant Valves: Install service valves on compressor suction and discharge.

3.5 FIELD QUALITY CONTROL

A. Test refrigeration system in accordance with ASME B31.5.

B. Pressure test refrigeration system with dry nitrogen to 400 psig. Perform final tests at 27 inches vacuum and 400 psig using halide torch or electronic leak detector.

C. Repair leaks.

D. Retest until no leaks are detected.

END OF SECTION

SECTION 23 31 00 - HVAC DUCTS AND CASINGS

PART 1 GENERAL

1.1 SUMMARY

A. Section Includes:
1. Ductwork
2. Clothes Dryer Exhaust Ductwork
3. Duct Sealant
4. Fabrication
5. Duct Pressure Testing

1.2 PERFORMANCE REQUIREMENTS

A. Variation of duct configuration or sizes other than those of equivalent or lower loss coefficient is not permitted except by written permission. Size round ducts installed in place of rectangular ducts in accordance with ASHRAE table of equivalent rectangular and round ducts.

B. Standards: Comply with most stringent requirements and recommendations of International Mechanical Code or SMACNA (Sheet Metal and Air Conditioning Contractors National Association) Duct Construction Standards for fabrication, construction and sealant of duct, fittings, and accessories.

C. Construct ductwork to NFPA 90A.

1.3 ENVIRONMENTAL REQUIREMENTS

A. Do not install duct sealant when temperatures are less than those recommended by sealant manufacturers.

B. Maintain temperatures during and after installation of duct sealant.

1.4 DEFINITIONS

A. Black Carbon Steel: Plain carbon steel which is not galvanized or oiled.

PART 2 PRODUCTS

2.1 DUCT MATERIALS

A. Galvanized Steel Ducts: ASTM A653 galvanized steel sheet, lock-forming quality, having G60 zinc coating of in conformance with ASTM A90.

B. Aluminum Ducts: ASTM B209; aluminum sheet, alloy 3003-H14. Aluminum Connectors and Bar Stock: Alloy 6061-T6 or of equivalent strength.

C. Fasteners: Rivets, bolts, or sheet metal screws.

D. Hanger Rod: ASTM A36; steel, galvanized; threaded both ends, threaded one end, or continuously threaded.

2.2 INSULATED FLEXIBLE DUCTS [GRD CONNECTION]

A. Manufacturers: Thermaflex G-KM or approved equal.

B. Product Description: Black polymer film supported by helical-wound spring steel wire; fiberglass insulation; polyethylene vapor barrier film, UL 181 Class 1 complying with NFPA 90A & 90B.
1. Pressure Rating: 6 inches wg positive and 1 inches wg negative.
2. Maximum Velocity: 5000 fpm.
3. Temperature Range: -20 degrees F to 250 degrees F.
4. Thermal Resistance: R-4.2

C. Accessories:
1. Hanger Strap: Thermaflex FlexTie – 1-1/2” wide, adjustable, plenum rated.
2. Elbow: Thermaflex FlexFlow Elbow or Malco flexible duct support – One-piece adjustable design installs over flex duct.

2.3 SINGLE WALL SPIRAL ROUND DUCTS

A. Manufacturers: McGill AirFlow, Semco or approved equal.

B. Product Description: UL 181, Class 1, round spiral lockseam duct constructed of galvanized steel.

C. Joints: 16” and larger flange with gasket material.

D. Elbows: Smooth radius or 5 section, 1.5D.

E. Application: Required for all exposed round ductwork; all round ductwork 12” dia. and larger; all round ductwork with static pressure over 1” w.g.. Optional for all round ductwork.

F. Construct duct with the following minimum gages:

Diameter	Gauge
3 inches to 14 inches	26
15 inches to 26 inches	24

G. Construct fittings with the following minimum gages:

Diameter	Gauge
3 inches to 14 inches	24
15 inches to 26 inches	22

2.4 SINGLE WALL ROUND DUCTS

A. Manufacturers: Ductmate GreenSeam+ or approved equal.

B. Product Description: Snap lock round duct with self-sealing butyl rubber longitudinal seam and polyurethane gasket transverse seam. No external sealant. No VOCs.

C. Joints: Male/Female with integral gasket.

D. Elbows: Smooth radius, 1.5D.

E. Application: Only allowed for low pressure ductwork with static pressure of 1” w.g. or less, less than 10” diameter and concealed. Not for use exposed.

F. Construct duct with the following minimum gages:

Diameter	Gauge
4 inches to 10 inches	26

G. Construct fittings with the following minimum gages:

Diameter	Gauge
4 inches to 10 inches	24

2.5 SINGLE WALL ROUND DUCTS (SNAP-LOCK)

A. Product Description: Product not acceptable for use.

2.6 DUCT SEALANT

A. Manufacturer: Design Polymerics, United McGill, Hardcast or approved equal.

B. Sealant shall be water based and formulated to withstand working temperatures of -25°F to +200°F. All sealants shall exceed 500 hours under ASTM C 732 (artificial weathering) and pass ASTM C 734 (low temperature flexibility after artificial weathering). All sealants shall be of an elastomeric nature, have a weight per gallon not to exceed 12.5, have solids by weight of 66% ± 2%, pass UL 723 with a flame spread of 5 and smoke developed of 5.

2.7 DUCTWORK FABRICATION

A. Fabricate and support rectangular and round ducts in accordance with SMACNA HVAC Duct Construction Standards - Metal and Flexible. Provide duct material, gages, reinforcing, and sealing for operating pressures corresponding to the ESP (external static pressure) of the fan system. i.e. Ductwork for a fan with and ESP of 0.75” w.g. should be constructed per SMACNA 1” w.g. pressure standard.

B. Construct T's, bends, and elbows with minimum radius 1-1/2 times centerline duct width. Where not possible and where rectangular elbows are used, provide airfoil turning vanes. Where acoustical lining is indicated, furnish turning vanes of perforated metal with glass fiber insulation.

C. Indicated dimensions on drawings are net inside. Allow for thickness of duct lining where indicated.

D. Increase duct sizes gradually, not exceeding 15 degrees divergence wherever possible; maximum 30 degrees divergence upstream of equipment and 45 degrees convergence downstream.

E. Fabricate continuously welded round and oval duct fittings two gages heavier than duct gages indicated in SMACNA Standard. Minimum 4 inch cemented slip joint, brazed or electric welded. Prime coat welded joints.

F. Provide standard 45-degree lateral wye takeoffs. When space does not allow 45-degree lateral wye takeoff, use 90-degree conical tee connections.

2.8 CLOTHES DRYER EXHAUST DUCTWORK

A. Rigid galvanized sheet metal of minimum 26 gauge with smooth interior finish.

PART 3 EXECUTION

3.1 EXAMINATION

A. Verify sizes of equipment connections before fabricating transitions.

3.2 INSTALLATION

A. Make field measurements to establish locations of hangers and supports where installation will not damage building construction.

B. During construction, install temporary closures of metal or taped polyethylene on open ductwork to prevent construction dust from entering ductwork system.

C. Where ducts pass through partitions, ceilings or floors. Provide 1" clearance and insulate from structure with insulation material. Provide flanged sheet metal closure.

D. Where ducts pass through rated walls or assemblies without fire dampers, provide ¼” to 1” annular space and fill with firestop sealant. Ductwork shall be minimum 26 gauge metal.

E. Isolate joints between dissimilar metals with fiber gasket.

F. Drawings do not attempt to show all offsets in ductwork. Make such offsets as necessary for installation of work without additional cost to Owner. 15 degree maximum angle of offset.

G. Exposed ductwork shall be Appearance Grade. Ductwork located in crawl spaces, shafts, and suspended ceiling spaces are not considered exposed.
1. All round ductwork shall be spiral seam (no snap-lock joints).
2. All joints clean and workmanlike.
3. Ductwork entirely free of dents.
4. Ductwork subject to denting due to space function construct one gauge heavier than SMACNA standard for size indicated.
5. All hangers trimmed of excess metal.
6. Plumb, level, parallel or perpendicular to building structure.
7. Sealed with transparent, paintable sealant to avoid streaking.

H. Flexible Duct:
1. Install insulated flexible duct in full extended condition free of sags and kinks.
2. Use minimum length required to make connection.
3. Length shall not exceed 10 feet.
4. Supported on 36" centers with minimum 1-1/2” wide strap. Do not crush.
5. Connect flexible ducts to metal ducts with draw bands.

I. Install duct hangers and supports in accordance with Section 23 05 00.

J. Use double nuts and lock washers on threaded rod supports.

3.3 SEISMIC BRACING

A. See 23 05 00.

3.4 DUCT SEALING

A. Install and seal ducts in accordance with SMACNA HVAC Duct Construction Standards - Metal and Flexible. Ductwork shall be sealed using welds, gaskets, or mastic. Duct tape is not permitted as a sealant on any ducts with the exception of that on fiberglass ducts specifically made for such use.

B. For all ductwork seal all transverse joints and longitudinal seams. For 2” w.g. and higher pressure class ductwork also seal all duct wall penetrations (i.e. screw, fastener, rod or wire).

C. Low pressure ductwork (less than 3” w.g.) shall be sealed to a leakage rate not to exceed 6 percent of the system airflow. All deficient ductwork shall be re-sealed until compliant.

3.5 PRESSURE (DUCT LEAKAGE) TESTING

A. Perform duct leakage rate testing in accordance with SMACNA Duct Leakage Test Procedures for the following.
   1. All ductwork regardless of pressure class located exterior of the building or in an unconditioned space shall have a leakage rate of less than 6%.
   2. At least 25% of all ductwork with a pressure class of 3” w.g. or more. The maximum duct leakage (CL) shall be 4.0 per Energy Code C403.2.8.3.3.

B. All ductwork found deficient by testing shall be resealed and retested until leakage compliance is reached.

C. Provide written documentation of testing to be included with the Test and Balance report, see 23 05 93. Include drawing(s) indicating where test measurements were taken.

3.6 CLOTHES DRYER DUCT INSTALLATION

A. Ducts shall terminate outside the building and be equipped with a backdraft damper. No screens shall be used at termination.

B. Ducts shall not be constructed with sheet metal screws or other fasteners that enter the airstream. Ductwork shall be metal with smooth interior finish. The male end of duct joints shall extend in the direction of airflow.

C. Dryer ducts which penetrate a wall of ceiling membrane shall be fire caulked.

D. Dryer ducts shall be supported at minimum 4 foot intervals and secured in place.

E. Provide protective shield plates where duct is in concealed locations within framing. Plates shall be 16 gage steel and cover the duct area plus 2”. Shields may be omitted if duct is more than 1-1/2” from nearest edge of structural member.

F. Where the exhaust duct equivalent length exceeds 35 feet, provide a permanent label within 6 feet of the dryer duct connection. The label shall identify the actual equivalent duct length.

3.7 INTERFACE WITH OTHER PRODUCTS

A. Install openings in ductwork where required to accommodate thermometers and controllers. Install pitot tube openings for testing of systems. Install pitot tube complete with metal can with spring device or screw to prevent air leakage. Where openings are provided in insulated ductwork, install insulation material inside metal ring.

B. Connect diffusers or light troffer boots to low pressure ducts with 5 feet maximum length of flexible duct held in place with strap or clamp.

C. Connect air outlets and inlets to supply ducts with five foot maximum length of flexible duct. Do not use flexible duct to change direction.

3.8 CLEANING

A. Clean duct system and force air at high velocity through duct to remove accumulated dust. To obtain sufficient air flow, clean one half of system completely before proceeding to other half. Protect equipment with potential to be harmed by excessive dirt with temporary filters, or bypass during cleaning.

3.9 SCHEDULES

A. Ductwork Material Schedule:

AIR SYSTEM	MATERIAL
Supply, Return, Exhaust, Relief	Galvanized Steel, Aluminum
Fume Hood Exhaust	Stainless Steel
Outside Air Intake	Galvanized Steel
Combustion Air	Galvanized Steel
Exterior	Aluminum, Stainless Steel

B. Ductwork Pressure Class Schedule: Install higher pressure class than indicated where corresponding fan system ESP (external static pressure) is higher.

AIR SYSTEM	PRESSURE CLASS
Constant Volume Low Pressure Supply	Minimum 1 inch wg.
Return, Exhaust	Minimum 1 inch wg

END OF SECTION

SECTION 23 33 00 - AIR DUCT ACCESSORIES

PART 1 GENERAL

1.1 SUMMARY

A. Section Includes:
1. Dampers
2. Dryer Box
3. Duct access doors
4. Flexible duct connections

1.2 COORDINATION

A. Verify locations for access panels with Architect.

B. Coordinate damper power, control and fire alarm interface with other trades.

C. See 23 09 00 for Electric Damper Actuators.

1.3 QUALITY ASSURANCE

A. Dampers tested, rated and labeled in accordance with the latest UL requirements.

B. Damper pressure drop ratings based on tests and procedures performed in accordance with AMCA 500.

PART 2 PRODUCTS

2.1 MANUAL BALANCING DAMPERS

A. Manufacturers: Ruskin, Greenheck or approved equal

B. Frames: Galvanized steel, minimum 20 gage.

C. Blades: Galvanized steel, minimum 20 gage, attached to minimum 3/8 inch shafts with locking handle quadrant. Provide 2” standoff for insulated ductwork applications.

D. Maximum Velocity: 1500 fpm.

E. Rectangular: 24” and under on a side Ruskin MD25; over 24” on a side Ruskin MD35 or equal.

F. Round: Ruskin MDRS25 or equal.

2.2 CONTROL DAMPERS

A. Manufacturers: Tamco, Ruskin, Greenheck or approved equal

B. Frame: Extruded aluminum (6063T5) channel of minimum 0.080” thickness with mounting flanges on both sides.

C. Blades: Extruded aluminum (6063T5) airfoil. Maximum blade size 6 inches wide, 48 inches long, attached to minimum 7/16 inch hex shafts.

D. Bearings: Celcon inner bearing fixed to blade pin, rotating within a polycarbonate outer bearing inserted in the frame.

E. Seals: EPDM blade seals and silicone frame seals.

F. Damper Leakage: AMCA Pressure Class 1A, maximum leakage rate of 3.0 cfm/ft^2 at 1.0 inch w.g. pressure differential.

G. Maximum Pressure Differential: 6 inches w.g.

H. Rectangular: Tamco 1000, Ruskin CD50, Greenheck VCD-43 or equal.

I. Round: Ruskin CDRS25, Greenheck VCDR-53 or equal up to 12” diameter, for larger sizes use rectangular damper with manufacturer’s square-to-round transitions.

J. Options:
1. For dampers with a dimension over 48” provide multiple sections with jack shafts.
2. Provide parallel blade action for two position (open/closed) applications.
3. Provide opposed blade action for modulation or control applications.

2.3 INSULATED CONTROL DAMPERS

A. Manufacturers: Tamco, Ruskin, Greenheck or approved equal

B. Frame: Insulated extruded aluminum (6063T5) channel of minimum 0.080” thickness with mounting flanges on both sides.

C. Blades: Extruded aluminum (6063T5) airfoil internally insulated with expanded polyurethane foam and thermally broken. Maximum blade size 6 inches wide, 48 inches long, attached to minimum 7/16 inch hex shafts.

D. Bearings: Celcon inner bearing fixed to blade pin, rotating within a polycarbonate outer bearing inserted in the frame.

E. Seals: EPDM blade seals and silicone frame seals.

F. Damper Leakage: AMCA Pressure Class 1A, maximum leakage rate of 3.0 cfm/ft^2 at 1.0 inch w.g. pressure differential.

G. Maximum Pressure Differential: 6 inches w.g.

H. Rectangular Insulated: Tamco 9000, Ruskin CDTI-50, Greenheck ICD-44 or equal.

I. Round: Provide rectangular damper with manufacturer’s square-to-round transitions.

J. Options:
1. For dampers with a dimension over 48” provide multiple sections with jack shafts.
2. Provide parallel blade action for two position (open/closed) applications.
3. Provide opposed blade action for modulation or control applications.

2.4 REMOTE OPERATED BALANCING DAMPERS (MANUAL)

A. Manufacturers: Young, MAT or approved equal.

B. Damper:

1. Round butterfly or radial damper with external control hardware, 5020-CC, RT-250.
2. Round butterfly or radial damper with internal control hardware, 5020-CC-2, RT-150.
3. Rectangular opposed blade damper with external control hardware, 830A-CC, RT-200.
4. Rectangular opposed blade damper with internal control hardware, 830A-CC-2, RT-100.

C. Remote Damper Operator:
1. External cable control, 3” cover plate, 270-301
2. Internal cable control, 270-275
3. Remote cable wall control, 700 (where indicated).

2.5 REMOTE OPERATED BALANCING DAMPERS (ACTUATED)

A. Manufacturers: United Enertech, MAT or approved equal.

B. Damper:
1. Round butterfly or radial damper.
2. Rectangular opposed blade damper.

C. Actuator:
1. Low voltage actuator.
2. Plenum rated low voltage wiring.
3. Hand held controller/power source with damper position indicator.

D. Accessories:
1. Ceiling cover plate
2. Furnish (1) one hand held controller to owner.

2.6 PRESSURE INDEPENDENT VOLUME CONTROLLER (MANUAL CONTROL)

A. Manufacturer: Trox VFC

B. Circular adjustable volume flow controller for constant flow independent of duct system pressure. Galvanized steel casing with high-quality plastic damper blade, low-friction bearings, polyurethane bellows, stainless steel leaf spring and external rotary volume flow rate setpoint knob.

C. Features:
1. Mechanical self-powered, without external power supply.
2. Volume set from external scale; no tools required.

D. Technical data:
1. Nominal sizes: 4 – 10 in
2. Volume flow rate range: 13-784 cfm
3. Volume flow rate control range: 10 to 100 % of the nominal volume flow rate
4. Volume flow rate accuracy: approx. ± 10 % of the nominal volume flow rate
5. Minimum differential pressure: 0.12 in. w.g.
6. Maximum acceptable differential pressure: 2.0 in. w.g.

2.7 PRESSURE INDEPENDENT VOLUME CONTROLLER (2-POSITION MOTORIZED CONTROL)

A. Manufacturer: Trox VFC M01

B. Circular volume flow controller for constant flow independent of duct system pressure with 2-position motorized control actuator. Galvanized steel casing with high-quality plastic damper blade, low-friction bearings, polyurethane bellows, stainless steel leaf spring and actuator.

C. Features:
1. Mechanical stops for minimum and maximum volume flow rates.
2. 24 volt supply power voltage.
3. Damper actuator drives from min position to max position on 24 volt control signal.

D. Technical data:
1. Nominal sizes: 4 – 10 in
2. Volume flow rate range: 13-784 cfm
3. Volume flow rate control range: 10 to 100 % of the nominal volume flow rate
4. Volume flow rate accuracy: approx. ± 10 % of the nominal volume flow rate
5. Minimum differential pressure: 0.12 in. w.g.
6. Maximum acceptable differential pressure: 2.0 in. w.g.

E. Accessories:
1. Provide 24 volt control transformer.

2.8 COMBINATION FIRE AND SMOKE DAMPERS (INLINE)

A. Manufacturers: Ruskin FSD60/FSD60LP, FSDR60, equal by Greenheck, or approved equal.

B. Application: Provide FSD60LP (low pressure) model for dampers 14” in height and smaller. Provide FSDR60 for round ducts. All others provide standard FSD60.

C. Fabricate in accordance with NFPA 90A, UL 555, and UL 555S.

D. Fire Resistance: 1-1/2 hours or 3 hours depending on rating of wall.

E. Leakage Rating: Class I, maximum of 8 cfm at 4 inches w.g. differential pressure.

F. Damper Temperature Rating: 350 degrees F.

G. Frame: 16 gage, galvanized steel.

H. Blades:
1. Style: Airfoil-shaped, single piece, double skin.
2. Action: Opposed.
3. Orientation: Horizontal.
4. Material: Minimum 16 gage equivalent thickness, galvanized steel.
5. Width: Maximum 7 inches.

I. Bearings: Stainless steel or bronze.

J. Seals: Silicone blade edge seals and flexible stainless steel jamb seals.

K. Linkage: Concealed in frame.

L. Provide with duct transition connection.

M. Release Device: Close in controlled manner and allow damper to be reset.

N. Actuator: Belimo, electric 120 volt, 60 hertz, two-position, fail close.

O. Resettable Link Release Temperature: 165 degrees F.

P. Factory installed sleeve and mounting angles. Furnish silicone caulk factory applied to sleeve at damper frame to comply with leakage rating requirements.

Q. Accessories:
1. Damper Test Switch

2.9 DRYER BOX

A. Manufacturers: Guy Gray, In-O-Vate Technologies or approved equal.

B. 22 gauge aluminized steel manufactured wall recessed dryer vent hose receptacle with opening for 4” dia. duct and gas line. UL Classified for a one hour wall. Installation per manufacturer’s instructions.

2.10 DUCT ACCESS DOORS

A. Fabricate in accordance with SMACNA HVAC Duct Construction Standards - Metal and Flexible.

B. Fabrication: Rigid and close fitting of galvanized steel with sealing gaskets and quick fastening locking devices. For insulated ductwork, furnish minimum 1 inch thick insulation with sheet metal cover.
1. Less than 12 inches square, secure with sash locks.
2. Up to 18 inches Square: Furnish two hinges and two sash locks.
3. Up to 24 x 48 inches: Three hinges and two compression latches.
4. Larger Sizes: Furnish additional hinge.
5. Access panels with sheet metal screw fasteners are not acceptable.

2.11 FLEXIBLE DUCT CONNECTIONS

A. Manufacturers: Duro-Dyne or approved equal

B. Fabricate in accordance with SMACNA HVAC Duct Construction Standards - Metal and Flexible.

C. Double fold “Grip-Loc” metal-to-fabric connection.

D. Indoor Connector: “Metal-Fab”, 24 ga, 3”metal - 3” fabric - 3” metal.
1. Fabric: UL listed fire-retardant Neoprene coated woven glass fiber fabric conforming to NFPA 90A, minimum density 30 oz per sq yd, 500 lbs tensile strength.

E. Exterior Connector: “Metal-Fab”, 24 ga, 3”metal - 3” fabric - 3” metal.
1. Fabric: Ul listed fire-retardant Hypalon coated woven galas fiber fabric conforming to NFPA 90A, minimum density 24 oz per sq yd, 250 lbs tensile strength.

PART 3 EXECUTION

3.1 EXAMINATION

A. Verify rated walls are ready for fire damper installation.

B. Check location of air outlets and inlets and make necessary adjustments in position to conform to architectural features, symmetry, and lighting arrangement.

3.2 INSTALLATION.

A. Install in accordance with NFPA 90A, and follow SMACNA HVAC Duct Construction Standards - Metal and Flexible. Refer to Section 23 31 00 for duct construction and pressure class.

B. See Section 23 34 00, paragraph 1.4 for damper installation.

C. Provide motorized in lieu of gravity back-draft dampers per Energy Code.

D. Provide control dampers where not furnished with packaged equipment.

E. Provide insulated control dampers where:
1. The damper is installed behind a louver.
2. The damper is installed in a roof penthouse or gravity ventilator.
3. The damper is unducted and open to a conditioned space.

F. Provide shroud (matching duct material) over flexible duct connections when installed outside.

G. Install remote operated dampers for balancing where damper is located in an inaccessible location.

H. Access Doors: Install access doors at the following locations and as indicated on Drawings:
1. Before and after each fire damper, smoke damper and combination fire and smoke damper.
2. Where access is required for a valve or damper.
3. Install at locations for cleaning kitchen exhaust ductwork in accordance with NFPA 96.

I. Access Door Sizes: Install minimum 8 x 8 inch size for hand access, 18 x 18 inch size for shoulder access, and as indicated on Drawings. Review locations prior to fabrication.

J. Install temporary duct test holes as required for testing and balancing purposes. Cut or drill in ducts. Cap with neat patches, neoprene plugs, threaded plugs, or threaded or twist-on metal caps.

K. Install fire dampers, combination fire and smoke dampers and smoke dampers at locations as indicated on Drawings. Install with required perimeter mounting angles, sleeves, breakaway duct connections, corrosion resistant springs, bearings, bushings and hinges.
1. Install smoke dampers and combination smoke and fire dampers in accordance with NFPA 92A.
2. Install dampers square and free from racking with blades running horizontally.
3. Do not compress or stretch damper frame into duct or opening.

4. Handle damper using sleeve or frame. Do not lift damper using blades, actuator, or jack shaft.
5. Install bracing for multiple section assemblies to support assembly weight and to hold against system pressure. Install bracing as needed.
6. Coordinate fire/smoke damper and smoke damper with Fire Alarm Contractor for smoke detector activation and fire alarm system integration. Install any duct smoke detectors furnished by Fire Alarm Contractor.

3.3 INSTALLATION – PRESSURE INDEPENDENT VOLUME DAMPERS (PIVD)

A. Select device volume setpoint closest to scheduled volume.

B. Provide device dimension the same size as ductwork.

C. Trox VFC: Mark setpoint on scale and indicate cfm.

3.4 INSTALLATION - FLEXIBLE DUCT CONNECTIONS

A. Provide flexible duct connection on supply outlet and return/exhaust inlet of all ducted fan powered equipment.

B. Support and align ductwork to avoid strain on flexible connection.

3.5 DEMONSTRATION

A. Demonstrate re-setting of fire dampers to Owner's representative.

END OF SECTION

SECTION 23 37 00 - AIR OUTLETS AND INLETS

PART 1 GENERAL

1.1 SUMMARY

A. Section Includes:
1. Diffusers, Registers & Grilles
2. Louvers
3. Louvered penthouses
4. Goosenecks

1.2 QUALITY ASSURANCE

A. Diffuser, register, and grille performance shall be tested and rated in accordance with ASHRAE 70.

B. Louver performance shall be tested and rated in accordance with AMCA 500.

PART 2 PRODUCTS

2.1 RECTANGULAR CEILING DIFFUSER

A. Manufacturers: Titus, Price, Krueger or approved equal.

B. Type: Square, stamped, multi-core, adjustable pattern diffuser.

C. Frame: Surface mount with flat frame or T-bar lay-in.

D. Fabrication: Steel with baked enamel white finish.

E. Accessories:
1. Field fabricated steel plenum, internal baffle and round side duct inlet assembly.

2.2 LOW-FLOW RECTANGULAR CEILING DIFFUSER (Outside Air)

A. Manufacturers: Titus TJD or approved equal.

B. Type: Square plaque, induction nozzles, removable face panel.

C. Frame: 24”x24” module for lay-in T-bar ceilings or plaster frame for surface mount GWB ceiling.

D. Fabrication: Steel with baked enamel white finish.

E. Accessories:
1. Field fabricated steel plenum, internal baffle and round side duct inlet assembly.

2.3 RADIAL SLOT INDUCTION CEILING DIFFUSER (Outside Air)

A. Manufacturers: Price RSD or approved equal.

B. Type: Radial swirl diffuser with high induction individually adjustable radial slots, square face. Adjustable air pattern controllers for variable direction one-way, two-way, three-way

or four-way discharge patterns. Coated steel plenum and internal baffle. Round slot array pattern.

C. Frame:
1. 6” dia. - 12”x12” module for surface mount GWB ceiling or 24”x24” frame for lay-in T-bar ceiling.
2. 8”-12” dia. - 24”x24” module for lay-in T-bar ceilings or plaster frame for surface mount GWB ceiling.

D. Fabrication: Galvanized steel with white powder-coated finish. Black polycarbonate adjustable air pattern controllers.

E. Accessories:
1. Steel plenum, internal baffle and round side duct inlet assembly.

2.4 RADIAL TWIST INDUCTION CEILING DIFFUSER (Outside Air)

A. Manufacturers: Price RTD or approved equal.

B. Type: Radial twist diffuser with high induction vortex pattern, square face.

Frame: 24”x24” module for lay-in T-bar ceilings.

C. Fabrication: Galvanized steel with white powder-coated finish.

D. Accessories:
1. Field fabricated steel plenum, internal baffle and round side duct inlet assembly.

2.5 EXHAUST/ RETURN GRILLE

A. Manufacturers: Titus, Price, Krueger or approved equal.

B. Type: Fixed blades, 1/2 inch blade spacing, with blades set at 35 degrees.

C. Frame: 1-1/4 inch margin with countersunk screw mounting, welded corners.

D. Fabrication: Steel with 20 gage minimum frames and 22 gage minimum blades, with factory white enamel finish.

E. Accessories:
1. Opposed blade damper.
2. Field fabricated steel plenum, internal baffle and round side duct inlet assembly.

2.6 EGGCRATE EXHAUST / RETURN GRILLE

A. Manufacturers: Titus, Price, Krueger or approved equal.

B. Type: Fixed grilles of 1/2 x 1/2 x 1/2 inch aluminum core.

C. Frame: 1-1/4 inch margin with countersunk screw mounting or channel lay-in frame for suspended grid ceilings.

D. Fabrication: Aluminum with factory white enamel finish.

2.7 LOUVERS

A. Manufacturers: Greenheck ESD-403, Ruskin, Wonder Metal or approved equal.

B. Product Description: Stationary, drainable blade. AMCA certified.

C. Type: 4 inch deep with blades on 45 degree slope, heavy channel frame. Minimum initial point of water penetration of 900 fpm.

D. Fabrication: 12 gage thick extruded aluminum, welded assembly, with factory 2-coat 70% Kynar finish, color to be selected.

E. Mounting: Furnish with flanges, mullions, and hardware for installation.

F. Bird Screen: Aluminum 3/4" x 0.051” flattened expanded metal.

G. Inset Screen: Aluminum 16x18 mesh, aluminum frame.

2.8 LOUVERED PENTHOUSE

A. Manufacturers: Greenheck, Cook, Price or approved equal.

B. Product Description: Square Louvered type, with aluminum constructed housing; aluminum wire bird screen and insect screen; square base to suit roof curb with continuous curb gaskets.

C. Roof Curb: Galvanized steel or aluminum construction with continuously welded seams, built-in cant strips, 1 inch insulation with liner, damper tray, curb seal and factory installed nailer strip. Matched to roof pitch.

D. Backdraft Damper: Gravity actuated, aluminum multiple blade construction, felt edged with offset hinge pin, nylon bearings, blades linked.

E. Motor Operated Damper: Aluminum multiple blade construction, sealed edged with offset hinge pin, nylon bearings, blades linked and motor drive, power open, spring return.

2.9 GOOSENECKS

A. Fabricate in accordance with SMACNA HVAC Duct Construction Standards - Metal and Flexible, of minimum 18 gage aluminum. Provide termination insect screen.

2.10 CAPS

A. Wall Cap (round connection): Aluminum construction, aluminum finish, built in birdscreen with damper. Greenheck WC or approved equal.

B. Wall Cap (rectangular): Steel construction with black enamel finish, built in birdscreen with damper. Greenheck WC or approved equal.

PART 3 EXECUTION

3.1 EXAMINATION

A. Verify inlet and outlet locations with Architectural Plans.

B. Verify ceiling/wall type before ordering.

C. Verify diffuser air patterns are as indicated before starting air balance.

3.2 LOUVERS

A. Provide louvers with insect screen when louver is un-ducted or when scheduled.

3.3 INSTALLATION

A. Install diffusers to ductwork with airtight connection.

B. Install balancing dampers on duct take-off to diffusers, grilles, and registers, whether or not dampers are furnished as part of diffuser, grille, and register assembly.

C. Paint visible portion of ductwork behind air outlets and inlets matte black

3.4 INTERFACE WITH OTHER PRODUCTS

A. Check location of outlets and inlets and make necessary adjustments in position to conform to architectural features, symmetry, and lighting arrangement.

END OF SECTION

SECTION 23 40 00 - FILTERS

PART 1 GENERAL

1.1 SUMMARY

A. Section Includes:
1. Disposable, pleated filters.

1.2 PERFORMANCE REQUIREMENTS

A. Conform to ARI 850 Section 7.4.

B. Dust Spot Efficiency: Plus or minus 5 percent.

PART 2 PRODUCTS

2.1 DISPOSABLE, PLEATED FILTERS

A. Manufacturers: Camfil, Flanders, Airguard, Viledon or approved equal.

B. MERV 8: UL 900 Class 2, pleated, cotton and polyester blend, radial pleat with welded wire grid, cardboard frame. 1”, 2” & 4”. (Camfil 30/30)

C. MERV 13 (85%): UL 900 Class 2, pleated synthetic media with three layers, spunbond polyester prefilter, electrostatically spunpolycaronate microfiber middle layer and spunbond polyester downstream layer. 2” & 4” (Viledon Mini 85)

PART 3 EXECUTION

3.1 INSTALLATION

A. Install filters with felt, rubber, or neoprene gaskets to prevent passage of unfiltered air around filters.

B. Do not operate fan system until filters are in place. Replace filters used during construction before testing, with clean set. Provide owner with replacement set of filters.

END OF SECTION

SECTION 23 72 00 - ENERGY RECOVERY UNITS

PART 1 GENERAL

1.1 SUMMARY

A. Section Includes:
1. Package ERV with core.

1.2 QUALITY ASSURANCE

A. Entire unit shall be ETL Certified per U.L. 1995 and bear an ETL sticker.

B. Blowers shall be AMCA Certified for airflow.

C. Energy Wheel shall be AHRI Certified per Standard 1060.

1.3 COORDINATION

A. Coordinate size and location of all building penetrations required for installation of each unit and associated hydronic, gas and electrical systems.

B. Contractor shall coordinate with roofing contractor to ensure curb unit is properly flashed.

1.4 EXTRA MATERIALS

A. Furnish extra materials described below that match products installed and that are packaged with protective covering for storage and identified with labels describing contents.
1. Filters: 3 sets of disposable filters for each unit.
2. One set of fan and energy wheel belts

1.5 ELECTRICAL

A. Short-Circuit Current Rating (SCCR): All HVAC and refrigeration equipment with multi-motor or combination electrical loads shall comply with NEC 110.10 & 440.4 and must include a SCCR greater than the Available Interrupting Current (AIC) of the electrical circuit serving the equipment. See electrical drawings for required AIC kA rating. Equipment SCCR may be presented in writing from the manufacturer or shown on the unit nameplate. Refrigeration or air-conditioning equipment over 60 Amps MOCP must list the SCCR on the unit nameplate. If the AIC rating is unavailable or cannot be determined provide equipment with a minimum SCCR of 10kA.

PART 2 PRODUCTS

2.1 CORE AIR TO AIR HEAT RECOVERY (HRV) (CEILING MOUNT)

A. Manufacturers: Ventacity or approved equal.

B. General: Unit shall be prepacked fully assembled at the factory and include: insulated double wall metal cabinet, counter flow fixed plate heat recovery core, ECM motors, direct drive fan assemblies, frost control pre-heater assembly, modulating bypass damper assembly, intake air and return air filter assemblies, temperature and pressure sensors,

and control panel assembly. All components to be factory tested and powered by a single electrical connection.

C. Cabinet: 2” Double-wall insulated with thermal breaks, powder coated exterior, mineral wool insulation, polyethylene seals. Doors of same double-wall construction with hinges and latches, sealed with EPDM rubber gasket. Bottom access.

D. Fans: ECM direct drive, variable speed motors. Backward inclined centrifugal impellers constructed of steel. Each fan shall be independently controlled.

E. Heat Recovery Core: Fixed plate parallel counter flow design constructed of aluminum. Core shall be removable for cleaning and maintenance. Core shall be gasketed to prevent cross-flow contamination.

F. Frost Control: Core shall be protected from frost build-up with a factory installed modulating electric resistance preheater.

G. Power: Unit shall be powered with a single field connection and include an integral disconnect switch.

H. Controls: Unit shall be controlled by a factory provided control system with the ability to be monitored and controlled by a BMS. Factory controls shall include a remote interface control panel.

I. Sensors: Unit shall include factory installed sensors connected to the factory controls which monitor temperature in each airstream, pressure sensors across the filter, fan and casing, safety temperature disconnect and condensate overflow.

J. Bypass Damper: Fully modulating bypass damper assembly to bypass outside air around the core. Assembly shall be two interlinked dampers to close airflow through core while opening the bypass. Damper blade shall have blade seals.

K. Intake and Exhaust Dampers (External): Class 1A motorized, two-position aluminum dampers on outside air intake and exhaust outlet openings. Damper operation shall be interlocked with unit fan operation. Field mounted and wired.

L. Filters: Integral filter racks shall accommodate a 4” thick filter. Provide MERV 13 outside air filter and MERV 8 exhaust air filter.

M. Condensate: Unit shall include a powder-coated steel condensate drain pan on the exhaust air stream. Pan shall be sloped to drain. Provide cleanable float-ball p-trap to gravity drain or a condensate pump.

PART 3 EXECUTION

3.1 EXAMINATION

A. Verify roof curbs are installed and dimensions are as instructed by manufacturer.

3.2 PREPARATION

A. Furnish roof curbs for installation.

3.3 INSTALLATION

A. Secure unit with cadmium plated steel lag screws to roof curb.

B. Install flexible connections between unit and ductwork. Ensure metal bands of connectors are parallel with minimum one inch flex between ductwork and fan while running.

C. Provide sheaves required for final air balance.

3.4 MANUFACTURER'S FIELD SERVICES

A. Furnish services of factory trained representative for minimum of one day to start-up, calibrate controls, and instruct Owner on operation and maintenance.

3.5 CLEANING

A. Vacuum clean coils and inside of fan cabinet.

B. Install clean filters.

3.6 DEMONSTRATION

A. Demonstrate fan operation and maintenance procedures.

3.7 PROTECTION OF FINISHED WORK

A. Do not operate fans for until ductwork is clean, filters in place, bearings lubricated, and fan has been test run under observation.

END OF SECTION

SECTION 23 81 26 - SPLIT-SYSTEM AIR CONDITIONERS & HEAT PUMPS

PART 1 GENERAL

1.1 SUMMARY

A. Section Includes:
1. Ductless split systems.

1.2 MAINTENANCE SERVICE

A. Furnish service and maintenance of equipment for one year from Date of Substantial Completion. Include maintenance items as shown in manufacturer's operating and maintenance data, including filter replacements, fan belt replacement, and controls checkout and adjustments.

B. Furnish 24-hour emergency service on breakdowns and malfunctions for this maintenance period.

1.3 QUALITY ASSURANCE

A. Capacity rating in accordance with ARI.

B. Sound rating is accordance with ARI 270.

C. Insulation and adhesives: Meet requirements of NFPA 90A.

1.4 ELECTRICAL

A. Short-Circuit Current Rating (SCCR): All HVAC and refrigeration equipment with multi-motor or combination electrical loads shall comply with NEC 110.10 & 440.4 and must include a SCCR greater than the Available Interrupting Current (AIC) of the electrical circuit serving the equipment. See electrical drawings for required AIC kA rating. Equipment SCCR may be presented in writing from the manufacturer or shown on the unit nameplate. Refrigeration or air-conditioning equipment over 60 Amps MOCP must list the SCCR on the unit nameplate. If the AIC rating is unavailable or cannot be determined provide equipment with a minimum SCCR of 10kA.

1.5 QUALIFICATIONS

A. The system shall be installed by a Mitsubishi authorized CITY MULTI Diamond Dealer. The contractor service and install training should be performed by the manufacturer.

PART 2 PRODUCTS

2.1 DUCTLESS SPLIT SYSTEM AIR CONDITIONING & HEAT PUMP UNITS

A. Manufacturers: Mitsubishi or approved equal.

B. General: Indoor/Outdoor unit combination shall be manufacturer paired. ETL labeled, AHRI 240 rated. R-410a Refrigerant. Cooling operation from 14F to 115F. Heating operation from -4F to 75F. 5 year Manufacturer parts and defect warranty, 7 year compressor warranty.

C. Indoor unit (Ceiling Cassette): Four-way style ceiling recess unit with ceiling grille. Factory assembled, wired and run tested. Outside air intake with field installed filter. Adjustable air outlet for 4-way, 3-way or 2-way airflow.
   1. Fan: Three speed, direct drive fan with permanently lubricated bearings, statically and dynamically balanced. Adjustable guide vane and automatic air swing.
   2. Filter: Removable washable.
   3. Coil: Smooth plate aluminum fins on copper tubing with inner grooves, silver alloy brazed, pressure tested, condensate pan and drain. Integral 19” condensate lift pump.

D. Outdoor unit: Horizontal discharge condensing unit constructed of galvanized steel. Factory assembled, piped and wired. Thermally fused acrylic or polyester powder coating with cadmium plated assembly hardware.
   1. Fan: Direct drive, variable speed DC motor, permanently lubricated bearings, mounted with vibration isolation, fan guard.
   2. Coil: Corrugated aluminum fins on copper tubing with protective metal guard and metering orifice. Pre-charged with refrigerant.
   3. Compressor: Hermetic, inverter driven, variable speed, dual rotary type. Refrigerant accumulator, internal thermal overload, high pressure safety switch. Pulse Amplitude Modulation (PAM) inverter drive.

E. Control: Microprocessor controlled self-diagnostic, 3-minute run time delay, auto restart after power loss, test run switch, automatic cooling, display set point and room temperature, 24/7 programmability.
   1. Microprocessor in each outdoor and indoor unit communicating via A-Control data over power transmission.
   2. Monitor return air temperature, indoor coil temperature.

F. Wired Remote Controller

G. Accessories:
   1. Outdoor unit pan heater.

2.2 REFRIGERANT PIPING SERVICE VALVE

A. Manufacturer: Diamondback or approved equal.

B. Full port, forged brass ball valve with Schrader valve, flare connections, Teflon seals and gaskets. 700 psig rated, R-410A compatible, fully factory assembled and pressure tested.

C. Provide with insulation cover of polyethylene foam with PVC cover and tape.

2.3 REMOTE CONTROLLERS

A. Manufacturers: Mitsubishi or approved equal.

B. Remote controllers shall operate indoor units. The wiring for the remote controllers shall be simple, non-polar, two-wire connections. All remote controllers shall be wall-mounted with an LCD display and contain a microprocessor that constantly monitors operation to maintain smooth indoor unit operation. Set temperature shall be adjusted in increments of 1°F or 2°F, depending on the systems and controllers. In the event of an abnormality, the remote controller shall display a four-digit error code and the indoor unit address.

C. PAR-40MAA: Deluxe MA Remote Controller
   1. Backlit display

2. Capable of controlling up to 16 indoor units (defined as 1 group).
3. Displays: Room temperature, relative humidity, operation status, setpoint.
4. Control the following operations: On/Off, Operation Mode (cool, heat, auto, dry, and fan), temperature setting, fan speed setting, setback, hold and airflow direction setting.
5. Timer settings of on/off/temperature up to 8 times in a day in 5-minute increments with an Auto Off timer and able to limit the set temperature range.
6. Room temperature shall be sensed at the Controller.

2.4 CONDENSATE PUMPS

A. See Section 230500.

PART 3 EXECUTION

3.1 EXAMINATION

A. Coordinate size and location of concrete pad for condensing unit. Provide inserts for mounting.

B. Coordinate size and location of sleeves or block-outs needs for refrigerant piping.

C. Determine refrigerant pipe routing to efficiently minimum run length and avoid interference.

3.2 INSTALLATION

A. Install condensate piping with trap and determine route from drain pan to nearest waste with 1/4" slope. Provide condensate pump where drain is not available, or slope cannot be made.

B. Install components furnished loose for field mounting.

C. Install refrigerant piping from condensing unit to indoor unit(s). Install refrigerant specialties furnished with unit.

D. Insulate both liquid and vapor refrigerant piping on all runs.

E. Evacuate refrigerant piping and install initial charge of refrigerant.

F. Install electrical devices furnished loose for field mounting.

G. Install control wiring between air handling unit, condensing unit, and field installed accessories.

3.3 INSTALLATION – FAN COIL UNIT

A. Install condensate piping with trap and determine route from drain pan to nearest waste with 1/4" slope. Provide condensate pump where drain is not available or slope cannot be made.

B. Install fan coil units on vibration isolators.

C. Connect ducted fan coil units to supply and return ductwork with flexible connections.

3.4 INSTALLATION - CONDENSING UNIT

A. Install condensing units at grade on concrete foundations with anchors.

3.5 INSTALLATION - CONDENSATE PUMPS

A. See Section 230500.

3.6 MANUFACTURER'S FIELD SERVICES

A. Furnish initial start-up and commissioning. During first year of operation, including routine servicing and checkout.

3.7 CLEANING

A. Vacuum clean coils and inside of unit cabinet if necessary.

B. Install new filters in units at Substantial Completion.

3.8 DEMONSTRATION

A. Demonstrate unit operation and maintenance.

B. Furnish services of manufacturer's technical representative for one day to instruct Owner's personnel in operation and maintenance of units. Schedule training with Owner, provide at least 7 days' notice to Architect/Engineer of training date.

3.9 PROTECTION OF FINISHED WORK

A. Do not operate indoor units during construction for temporary heat.

B. Do not operate units until ductwork is clean, filters are in place, bearings lubricated, and fan has been test run under observation.

END OF SECTION

SECTION 23 83 23 - ELECTRIC TERMINAL HEATING UNITS

PART 1 GENERAL

1.1 SUMMARY

A. Section Includes:
1. Electric radiant heaters.
2. Electric wall heaters.

PART 2 PRODUCTS

2.1 ELECTRIC RADIANT PANEL

A. Manufacturers: Markel, Aztec or approved equal.

B. Assembly: Electric resistance graphite element imbedded between two layers of insulation, steel shell. T-bar mount, surface mount with aluminum frame, suspended with aluminum frame or recessed mount with aluminum frame based on ceiling installation type. UL listed and labeled.

C. Ceiling Panels: 24x24 or 24x48 inch with baked enamel white finish.

2.2 FORCED AIR WALL HEATER

A. Manufacturers: Markel, Cadet, Brasch or approved equal.

B. 18-gauge powder coated housing and frame, white. Sealed tubular heating element, thermal overload cut-off, fan delay switch, built-in double pole adjustable thermostat, vane axial blower. Without summer fan switch. UL listed.

PART 3 EXECUTION

3.1 EXAMINATION

A. For recessed units, verify recess dimensions are correct size.

B. Verify wall construction is ready for installation.

C. Verify concealed blocking and supports are in place.

3.2 INSTALLATION

A. Install equipment exposed to finished areas after walls and ceilings are finished and painted. Avoid damage.

B. Protection: Install finished cabinet units with protective covers during remainder of construction.

C. Install electric heating equipment including devices furnished by manufacturer but not factory-mounted. Furnish copy of manufacturer's wiring diagram submittal. Install electrical wiring in accordance with manufacturer's submittals.

3.3 CLEANING

A. After construction is completed, including painting, clean exposed surfaces of units.

B. Touch-up marred or scratched surfaces of factory-finished cabinets, using finish materials furnished by manufacturer.

END OF SECTION

SECTION 260000 - ELECTRICAL GENERAL CONDITIONS

PART 1 GENERAL

1.1 GENERAL

A. Conform to the General Conditions, Supplementary Conditions, and related work in other Divisions for all work in Divisions 26, 27, and 28. See Division 1 for sequence of work.

B. Selected Division 26 equipment and systems referenced are to be commissioned per Section 011913 – General Commissioning Requirements and Section 260800 – Commissioning of Electrical Systems. The Contractor has specific responsibilities for scheduling, coordination, start-up, test development, testing and documentation. Coordinate all commissioning activities with the Commissioning Authority.

1.2 WORK INCLUDED

A. It is the intention of this division of the specifications and the accompanying drawings to describe and provide for the furnishing, installing, testing and placing in satisfactory and successful operation all equipment, materials, devices and necessary appurtenances to provide a complete electrical system, together with such other miscellaneous installations and equipment hereinafter specified and/or shown in the plans. The work shall include all materials, appliances and apparatus not specifically mentioned herein or noted on the plans, but which are necessary to make a complete working installation of all electrical systems shown on the plans or described herein. Equipment and devices furnished and installed under other divisions of this specification (or by the Owner) shall be connected under this division. The drawings and specifications are complementary and what is called for in either is binding as if called for in both.

B. By submitting a bid, the Contractor is acknowledging that he has made a thorough examination of the Contract Documents, existing site conditions, and has determined that these documents do sufficiently describe the scope of construction work required under this Contract.

1.3 SCOPE OF BASIC BID

A. Included in Divisions 26, 27, and 28 work is all work and related items necessary to provide all electrical installations except as specifically excluded. In general, this includes all labor, equipment, tools, etc., to complete the electrical work.

1.4 RELATED WORK

A. Temporary Power and Lighting - See Section 015100.

B. Mechanical Control Wiring – See Division 23.

C. Trenching, backfill and asphalt work – See Division 2.

1.5 STANDARDS AND REGULATIONS

A. The work shall comply with latest edition of applicable Standards and Codes of the following:

ASTM	American Society for Testing and Materials
NBFU	National Board of Fire Underwriters
NEC	National Electrical Code
---	State Electrical Code
NESC	National Electrical Safety Code
NEMA	National Electrical Manufacturers Association
NFPA	National Fire Protection Association
U.L.	Underwriters Laboratories Inc.
IPCEA	Insulated Power Cable Engineers Associated
CBM	Certified Ballasts Manufacturers
---	Federal, State and Local Building Codes
ETL	Electrical Testing Laboratories

B. If any conflict occurs between Government adopted Code Rules and this specification, the codes are to govern. Nothing in these drawings and specifications shall be construed to permit work not conforming to governing codes. Also, this shall not be construed as relieving the Contractor from complying with any requirements of the plans and specifications which may be in excess of, but not in conflict with, requirements of the Governing Codes.

1.6 PERMITS & FEES

A. The Contractor shall obtain and pay for all licenses, permits and inspections required by laws, ordinances and rules governing work specified herein. The Contractor shall arrange for inspection of work by the inspectors and shall give the inspectors all necessary assistance in their work of inspection.

B. The Contractor shall consult with and follow the requirements of the local fire, power and telephone utilities serving the area and shall coordinate his work with them.

C. Utility connection and hook-up charges for power and telephone shall be paid by the Owner directly to the utility. The Electrical Contractor is required to provide any and all coordination necessary to support the utility connection, file for application of service (or assist the Owner in filing for application of service) and coordinate dates for service with the utilities.

1.7 DEFINITIONS

A. When "Provide" is used, it shall be interpreted as "furnishing and installing complete in operating condition".

B. When "Drawings" is used, it shall be interpreted as "all Contract Drawings for all Disciplines".

C. When "Contractors" is used, it shall be interpreted as the Electrical Contractor.

1.8 INTENT OF DRAWINGS

A. The electrical drawings are intended to serve as working drawings for general layout. The equipment layout is diagrammatic and unless specifically dimensioned or detailed, does not indicate all fittings, hardware or appurtenances required for a complete operating installation.

B. Anything shown on the drawings but not covered in the specifications, or anything covered in the specifications but not shown on the drawings, shall be as if covered in both. In case of conflict between the drawings and specifications, the Engineer will select the method to be used. The Contractor shall be responsible for verifying all measurements before proceeding with the work.

C. Wiring diagrams are not intended to indicate the exact course of raceways or exact location of outlets. Raceway and outlet locations are approximately correct and are subject to revision as may be necessary or desirable at the time of installation. Precise location in every case shall be subject to the Engineer's approval.

D. The contractor shall review the manufacturer provided installation instructions for each piece of equipment prior to rough-in. Any conflict between the drawings, specifications and installation instructions shall be brought to the Engineer’s attention immediately. The contractor will not be paid for any reinstallation required due to failing to comply with manufacturer’s recommendations or requirements unless specifically directed by the engineer, in writing, after the conflict has been identified.

1.9 PROTECTION

A. The Contractor shall store and guard all equipment before installation and shall protect same, and replace any equipment that has been damaged prior to final acceptance.

1.10 HOUSEKEEPING

A. All electrical materials shall be kept stored in an orderly fashion protected from heat, cold, and the weather.

B. All marred surfaces shall be refinished and painted after installation.

C. All debris shall be removed from premises during work, as directed, and at completion of job.

1.11 TEMPORARY USE

A. Temporary or interim use of any and all portions of the electrical system shall be under the supervision of the Electrical Contractor.

B. Temporary power and lighting for use during construction shall be provided per the requirements of the Division 1 specifications.

1.12 AS-BUILT DRAWINGS

A. The Contractor shall maintain, in addition to any reference drawings, an as-built set of prints, on which all deviations from the original design shall be drafted in a neat, legible manner with red colored pencil. This red lined set shall identify all drawing revisions including addenda items, change orders, and Contractor revisions. The Contractor is responsible to revise panel schedules and load calculations as required.

B. Drawings shall show locations of all concealed raceway runs larger than 1", giving the number of conductors and size of raceway. Underground ducts shall be shown with cross section elevations. All pipe, raceway, manholes or lines of other trades shall be included.

C. The Contractor shall update all references to specific products to indicate products actually installed on project. This shall include, but not be limited to, lighting fixtures, baseboard heaters, etc.

D. Upon completion of the Divisions 26, 27, and 28 Work, the Contractor shall deliver the red lined drawings and one set of neatly drafted as-built drawings on electronic media in AutoCAD R-2013 format and full-size pdf to the Architect.

1.13 WARRANTY

A. Provide a written warranty that the Divisions 26, 27, and 28 work is free from mechanical and electrical defects. Contractor shall replace and repair, to the satisfaction of the Engineer, any parts of the installation which may fail within a period of 12 months after the certificate of final acceptance, provided that such failure is due to defects in material or workmanship, or failure to follow the specifications and drawings.

1.14 INSTRUCTIONS AND MANUALS

A. Operation and maintenance data shall be submitted in accordance with Section 017800.

B. Manuals shall contain shop drawings, wiring diagrams, operating and maintenance instructions, replacement parts lists, and equipment nameplate data for all equipment and systems installed under the project. Signal equipment submittals shall contain step-by-step circuit description information designed to acquaint maintenance personnel with equipment operation in each mode of operation. Manuals shall contain original brochures supplied by manufacturers. Xerox copies of originals will not be accepted.

C. Each type of device provided shall be identified in the O & M Manual using the same identification as shown on the drawings and specifications. The information included must be the exact equipment installed not the complete "line" of the Manufacturer. Where sheets show the equipment installed and other equipment, the installed equipment shall be neatly and clearly identified on such sheets. Parts lists shall give full ordering information assigned by the original parts manufacturer. Relabeled and/or renumbered parts information as reassigned by equipment supplier is not acceptable. The following information shall be provided for each device:

1. Manufacturer's name, address and phone number.
2. Local supplier's name, address and phone number.
3. Complete parts lists including quantities and manufacturer's part numbers.
4. Installation instructions.

5. Recommended maintenance items including maintenance procedure and recommended interval of maintenance listed in hours of operation, calendar unity or other similar time unit.
6. Warranty summary with warranty start and end dates for all components. Specific items are as follows:
   a. Lighting control components
   b. LED lights
   c. LED drivers
   d. Battery Back-up for emergency egress lighting
   e. All components of the systems listed in paragraph D below.

D. The O & M Manual shall be assembled in a loose leaf, 3-ring, hard cover binder and electronically on compact disc. The information contained in the manuals shall be grouped in an orderly arrangement by specification index. The manuals shall have a typewritten index and divider sheets between categories with identifying tabs. The covers shall be imprinted with the name of the job, Owner, Architect, Electrical Engineer, Divisions 26, 27, and 28 Contractor, and year of completion. The back edge shall be imprinted with the name of the job, Owner, and year of completion. As a minimum, the following selection shall be broken out:
   1. Light Fixtures with Manufacturer Warranties
   2. Panelboards
   3. Motor Controls
   4. Data network test results
   5. Low Voltage Lighting Control Systems

E. Wiring Diagrams for each system shall be complete for the specific system installed under the Contract. "Typical" Line Diagrams will not be acceptable unless properly marked to indicate the exact field installation.

1.15 WORK NOT INCLUDED

A. Indicated motors, controls, and equipment as described in other divisions shall be furnished by other trades, but shall be moved, set and wired to electrical controls and power supply by the Electrical Contractor.

B. Work to be included under this Contract shall be defined on drawings and in these specifications. Any details beyond these limits are meant only to give installation clarity to that portion which is a part of this Contract.

1.16 INSTRUCTION PERIODS

A. Upon completion of the work and after all tests and final inspection of the work by the authority(s) having jurisdiction, the Contractor shall demonstrate and instruct the Owner's designated operation and maintenance personnel in the operation and maintenance of the various electrical systems. The Contractor shall arrange scheduled instruction periods with the Owner. The Contractor's representatives shall be superintendents or foremen knowledgeable in each system and suppliers' representatives when so specified.

B. Scheduled Instruction periods shall be:
   1. Digital Lighting Control System 2 hours

C. Costs for time involved by Contractor shall be included in the bid.

1.17 COMPLETION OF WORK

A. Upon completion of the Divisions 26, 27, and 28 work, the Contractor shall comply with requirements of Section 017000 for project closeout.

B. Arrange for and obtain all required inspections and certificates pertaining to the Divisions 26, 27, and 28 work and deliver the certificates to the Engineer in triplicate.

C. Prior to or at the time of final inspection, the Contractor shall, as outlined in detail in the specifications, complete the delivery of all the following items:
   1. Completion Letter
   2. Certificate of Final Inspection, in triplicate form.
   3. Electrical Inspector Sign-off
   4. Fire Department Sign-off
   5. Warranty to Owner
   6. Marked Set, Electronic Media Set on CD in AutoCAD R-2013 Format, of “As-Built” Electrical Drawings
   7. Panelboard and Special Equipment Shop Drawings and Final Approved List of Materials Installed
   8. Certificate of Feeders Torque Results
   9. Phase Current Readings
   10. OHMIC Test Readings
   11. Wiring diagrams, Maintenance Manuals, Operation Instructions, and Brochures

1.18 SHOP DRAWING SUBMITTALS

A. This Contractor shall submit to the Architect as described in Section 016000. When shop drawings are submitted electronically, they shall be submitted as described in Paragraph B below.
   1. Manufacturer's Catalog Data.
   2. Complete Physical and Technical Data.
   3. Wiring Diagrams.
   4. Detailed Reference (written or highlighted) noting compliance with the appropriate specification section and applicable item numbers within that section.
   5. Other Descriptive Data as required by the Architect/ Engineer.

B. The Contractor shall submit to the Architect electronic shop drawings in PDF format. Electronic Shop Drawings that are submitted without following the format as outlined below will be returned for corrections without any further review.
   1. A separate PDF file shall be submitted for each Division including All submittal items for that Division as outlined below:
   2. Division 26 – Electrical
   3. Division 27 - Communications
   4. Division 28 – Electronic Safety and Security
   5. The contractor shall provide either a digital or hardware method of transporting the electronic submittal to the Architect. Files larger than 10Megabytes shall not be sent via email and shall be transferred via an FTP or similar file transfer protocol, PC compatible CD or PC compatible Thumb Drive. Divisions shall not be broken up into separate files for transfer via email.
   6. Each Specification PDF shall be submitted with the following format and salient attributes:
      a. Cover page including:
         1) Project Title as indicated on the plans
         2) Project Location including Address, City, State, Country
         3) Prime Contractor name, phone number, and email address
         4) Sub-Contractor name, phone number, and email address
         5) Specification Division Number and Title

b. Index Page outlining each specification section included in the submittal. This list shall be linked to a corresponding Specification Section Divider for each section. This link shall enable the reviewer to jump to a specification section by clicking the item in the list.
c. Specification Section Divider: Shop Drawings shall be divided by specification section and each section shall begin with a Divider Page outlining the Specification Number, Title, and a list of Submittal Items for the section. In the upper right-hand corner of the divider page, a Link shall be provided returning the reviewer to the Index Page.
d. Each Submittal Item listed on the Specification Section Divider shall be linked to the specific item being submitted. Each Submittal Item shall be hi-lighted Yellow with a Note Reference to the specific paragraph giving the submittal requirements.
e. Each page of the submittal shall be numbered in the Bottom Right corner of the page. Page numbering shall be Roman Numerals for all pages before the First Specification Section. Each Specification Section page shall be numbered with the Specification Section number, a dash, and the page number in the Specification Section.
f. Specification items shall be specifically hi-lighted as they apply to the project rather than hi-lighting an entire product family. Items that do not apply to this project shall be crossed out with a Red X.
g. The PDF file shall be not be protected to prevent printing, selecting of text within the document, or extracting of pages from the document.

C. Shop drawings shall be submitted complete, at one time and each item indexed with dividers and separated per specification section and shall be, but not limited to the items of equipment listed below:
1. All panelboards, showing breaker arrangement with circuit numbers, relays, and panel skirts.
2. Motor starters and controls designating where items are intended to be used and equipment being controlled.
3. Disconnect Switches
4. Fuses and spare fuse cabinet
5. Lighting Fixtures (Complete)
6. Low Voltage Lighting Control Systems
7. Wiring Devices
8. Back Boxes
9. Coverplates
10. Raceways and Connectors
11. Fire Wall Penetration Seals
12. Copper/Aluminum Wire
13. Data Communications
14. Any other items requested by Engineer.

*See Section 270000 for further requirements.

D. Within ten (10) working days after the date of the letter rejecting any items of equipment, lighting fixtures, or materials as not in accordance with the specifications, Contractor shall submit a new list of items he proposes to furnish and install in place of those items rejected. If the Contractor fails to submit this new list within the above specified time, or if any items on this second list are rejected as not being in accordance with these specifications, the Engineer may select the items which the Contractor shall furnish and install without change in Contract price or time of completion.

E. The acceptance of a manufacturer's name or product by the Engineer does not relieve the Contractor of the responsibility for providing materials and equipment which comply in all details with the requirements of the Contract Documents. The Contractor shall be solely responsible for submitting materials at such a time to allow a minimum of two (2) weeks for Engineer's review.

F. Electrical Drawings for the project have been developed by the Engineer using AutoCAD™ Revision 2012 software. These drawing files will be made available to the Contractor for development of shop drawings and/or "As-Builts" with a signed waiver of responsibility.

1.19 SCHEDULE OF VALUES

A. Provide Schedule of Values per Division 1 and related project requirements.

B. Divisions 26, 27, and 28 Breakdown: Provide schedule of values for the following categories (as a minimum):

1. Electrical Mobilization,Electrical Submittals,Electrical General Project Management, General Design, General Coordination
2. Branch Circuit Materials Rough-in & Labor
3. Branch Circuit Trim – Materials & Labor
4. Service Materials & Labor
5. Feeder Materials & Labor
6. Panelgear, Disconnects, Starters & Labor
7. Light Fixtures & Labor
8. Data Network
9. Systems Equipment – Labor
10. Fire Alarm System
11. Electrical Punchlist, Closeout, and Owner Training

C. The dollar value for "Electrical Punchlist, Closeout, and Owner Training" shall in no case be less than 2% of the total dollar value of the Divisions 26, 27, and 28 work (or as indicated in Division 1, whichever is higher). The dollar value for "Commissioning" shall in no case be less than 3.0% of the total dollar value of the Divisions 26, 27, and 28 work (or as indicated in Division 1, whichever is higher).

PART 2 PRODUCTS

2.1 COMPETITIVE PRODUCTS

A. Any reference in the specifications to any article, device, product, material, fixture, form or type of construction by name, make or catalog number shall be interpreted as establishing a standard of quality and shall not be construed as limiting competition. The Contractor, in such cases, may at his option use any article, device, product, material, fixture, form or type of construction which in the judgment of the Engineer, expressed in writing, is equal to that specified. However, any manufacturer not listed as an accepted Bidder for a specific item must be submitted for acceptance in writing in accordance with Section 016000.

2.2 MANUFACTURER/EQUIPMENT PRIOR APPROVALS

A. Any manufacturer/equipment not listed as an approved substitute for a specified item must be submitted for acceptance in accordance with Section 016000, in writing, with detailed information to include:

1. Manufacturer's Catalog Data
2. Complete Physical and Technical Data
3. Wiring Diagrams
4. Detailed reference (written or highlighted) noting compliance with the appropriate Specification Section and all applicable Specification item numbers within that Section
5. Complete type written index cross referencing all proposed substitutes and specified items

6. Detailed reference to specified items (written or highlighted) noting equal quality and performance of proposed substitute equipment
7. Other descriptive data, as required by the Engineer

B. If substitute material is determined to be acceptable by the Engineer, it will be included in a subsequent Addenda prior to bidding. The acceptance of a manufacturer's name or product by the Engineer does not relieve the Contractor of the responsibility for providing materials and equipment which comply in all details with the requirements of the Contract Documents.

C. Only materials which are specified or published in addenda as acceptable shall be used.

2.3 MATERIALS

A. All materials must be of the quality herein specified. All materials shall be new, of the best quality and free from defects. They shall be designed to ensure satisfactory operation and operational life in the environmental conditions which will prevail where they are being installed.

B. Each type of material shall be of the same make and quality. The materials furnished shall be standard products of the manufacturers regularly engaged in the production of such equipment and shall be the manufacturer's latest standard design.

C. All materials shall be U.L. or E.T.L. listed for the purpose for which they are used.

D. Equipment in compliance with U.L. standards but not bearing their label is not acceptable. If the manufacturer cannot arrange for labeling of an assembled unit at the factory the unit shall be field evaluated per the Washington State Administrative Code (WAC) and the electrical inspector's requirements.

2.4 COMPLETE SYSTEM

A. All the systems mentioned shall be complete and operational in every detail except where specifically noted otherwise. Mention of certain materials in these specifications shall not be construed as releasing the Contractor from furnishing such additional materials and performing all labor required to provide a complete and operable system.

2.5 NAMEPLATES

A. Provide nameplates constructed of plastic (black on white) laminated material engraved through black surface material to white sublayer (attach with screws on NEMA 1 enclosures). EXCEPTION (1): Emergency distribution system component labeling - white letters on red background. Exception (2): Series rated systems shall be yellow background with white letters. Lettering height shall be a minimum 3/8" high.

1. Switchboard and Panelboard Labels: Refer to Section 262416
2. Switch and Receptacle Labels: Refer to Section 262726
3. Motor Starter and Disconnect Labels: Refer to Section 262816
4. Special Equipment/Outlet Labels: Refer to Appropriate Sections.

B. Provide clear labels with typed black ¼" high lettering for the following:

1. Switch and receptacle labels: Refer to Section 262726. Receptacles shall be labeled with panel and circuit numbers.
2. Homerun junction boxes above the ceiling identifying panel and circuit numbers.

C. Provide a 'yellow' label with black lettering on the ceiling grid to identify any electrical control power supply above the ceiling. (i.e., lighting control power/equipment – abbreviate 'LC')

PART 3 EXECUTION

3.1 GENERAL

A. Careful consideration shall be given to clearances under and over beams, pipes and ducts, to provide proper headroom in all cases. Check drawings to determine heights of all suspended ceilings and size of pipe shafts where raceway and wire-ways shall run. Coordinate installation of Divisions 26, 27, and 28 wiring and equipment with
Division 23 and other trades. Where insufficient room for proper installation appears, obtain clarification from Engineer before any installation is begun.

3.2 COORDINATION

A. The Contractor is responsible for accomplishing Divisions 26, 27, and 28. The work shall coordinate with that of the other Contractors and/or other trades doing work in the building and shall examine all Drawings, including the several Divisions of Mechanical, Structural, Civil and Architectural, for Construction Details and necessary coordination. Specific locations of construction features and equipment shall be obtained from the Contract Documents, field measurements, and/or from the trade providing the material or equipment. No extra costs will be allowed for failure to obtain this information.

B. All conflicts shall be reported to the Engineer in writing before installation for decision and correction. Special attention is called to the following items:

1. Door swings to the end that switches will be located on "Strike" side of the door.
2. Location of grilles, pipes, sprinkler heads, ducts and other mechanical equipment so that all electrical outlets, lighting fixtures and other electrical outlets and equipment are clear from and in proper relation to these items.
3. Location of cabinets, counters, and doors so that electrical outlets, lighting fixtures and equipment are clear from and in proper relation to these items.
4. Type and height of ceiling.
5. All device measurements referenced on drawings or specifications are to be centered of device unless noted otherwise.

C. The Contractor will not be paid for work requiring reinstallation due to lack of coordination or interference with other Contractors or trades. This includes, but is not limited to, removing, replacing, relocating, cutting, patching, and finishing.

D. The Contractor shall review the installation manual for each device to be installed. If a conflict appears to occur between the manufacturer’s recommended installation practices and the plans or specifications, notify the Engineer immediately. Final determination shall be by the Engineer. The Contractor will not be paid for reinstallation due to failure to comply with manufacturer instructions or design documents.

E. Device and fixture locations may be changed within 15 feet without extra charge if so desired by the Engineer, before installation.

3.3 REQUESTS FOR INFORMATION (RFI)

A. It is our intent to provide a timely response for RFIs regarding Divisions 26, 27, and 28 Work. To further expedite this process, where a suggestion can be determined or derived at by the initiator of the RFI, it is required this suggestion be supplied with the submitted RFI. If no suggestion is given where one is possible, the RFI will be returned as incomplete.

3.4 CLEANING AND PAINTING

A. All equipment, whether exposed to the weather or stored indoors shall be covered to protect it from water, dust and dirt.

B. After installing, all metal finishes shall be cleaned and polished, cleaned of all dirt, rust, cement, plaster, grease and paint.

C. All equipment with a primer coat of paint shall be given two (2) or more coats of a finish enamel and scratched surfaces be refinished to look like new. Markings, identification and nameplates shall be replaced.

3.5 EQUIPMENT IDENTIFICATION

A. Provide identifying legible black permanent writing on all equipment, including pull boxes, to clearly indicate its use, area served, circuit identification, voltage, and any other useful data.

B. Each auxiliary system, including communications, shall be clearly labeled to indicate its function.

3.6 DEVIATION

A. Deviation from the shop drawings in construction or installation of equipment shall not be made unless Shop Drawings showing proposed deviations are submitted to and approved by the Engineer. If any equipment is furnished under this or other divisions with current, voltage or phase ratings that differ from those shown on the drawings, the Contractor shall notify the Engineer in writing immediately and shall not connect said equipment until instructed as to required changes by the Architect. No extension of time will be granted as a result of such changes.

3.7 EXCAVATIONS

A. All excavations are to be so conducted so that no walls or footings shall be disturbed in any way.

B. Remove all surplus earth not needed for backfilling and dispose of same as directed.

3.8 WIRING METHODS

A. All low voltage wiring shall be in Raceway with Junction Boxes and Fittings where concealed in walls, in inaccessible ceiling space, or where exposed in finished or unfinished areas.

B. All branch circuit wiring shall be installed in raceway with junction boxes and fittings.

C. Provide access panels as needed for pull boxes and equipment located above ceiling or behind walls.

D. Multiple feeder runs shall be rod hung, using a strut type channel with individual one-hole clamps, back plates and machine screws.

E. Any low voltage cables that are not terminated at both ends shall be tagged and labeled per code.

3.9 PENETRATIONS OF FIRE RATED ELEMENTS

A. Must be made such as to retain that rating.

3.10 HANGERS AND SUPPORTS

A. Provide hangers, brackets, and suspension rods and supplementary steel to support equipment.

B. Hangers provided under other divisions shall not be used for support of Divisions 26, 27, and 28 equipment unless permitted by Architect/Engineer.

3.11 PAINTING

A. Painting in general will be covered under another division of this specification, except items furnished under Divisions 26, 27, and 28 that are scratched, marred in shipment or installation, shall be refinished by the Divisions 26, 27, and 28 Contractor.

3.12 WORKMANSHIP AND OBSERVATION

A. Workmanship shall be of the best quality and none but competent workers shall be employed under the supervision of a competent foreman. All completed work shall represent a neat and workmanship like appearance.

B. All work and materials shall be subject to observation at any and all times by representatives of the Engineer.

3.13 MISCELLANEOUS

A. Provide complete seismic anchorage and bracing for the lateral and vertical support of conduit and electrical equipment, as required by the International Building Code.

B. Conduits that cross seismic separations shall be installed with flexible connection suitable to accommodate conditions. Secure raceways on each side of a separation and provide a minimum of 36” length of flexible conduit to span separation.

3.14 CABLE AND WIRING ROUTED UNDERGROUND OR UNDERSLAB

A. All cables and conductors, both line voltage and low voltage, routed underground or under-slab shall be U.L. listed for installation in wet locations per NEC and WAC codes.

END OF SECTION

SECTION 260519 - WIRES AND CABLES

PART 1 GENERAL

1.1 WORK INCLUDED

A. Provide all wire, cable, and terminations complete.

1.2 RELATED DOCUMENTS

A. Section 260000 – General Electrical Conditions

PART 2 PRODUCTS

2.1 WIRE AND CABLE (COPPER, 600-VOLT)

A. Interior and Above Grade: All wires to be Type THW or RHW. Type THWN/THHN or XHHW wire may be utilized at Contractors option, subject to code requirements. Wire and cables shall be brought to project in original containers bearing the underwriters' label. Provide Type AVA wire where conductors are subject to temperature above 167 Degrees F.

B. Underground: All conductors to be type USE. Increase Raceway size when necessary to accommodate conductors per code. Exception: Underground conductors completely contained in code recognized Raceway and boxes may be Type THW, THWN or XHHW.

2.2 SPLICES

A. Above Grade: Solderless type only. Preinsulated "twist-on" type (limited to size #10 and smaller). Bolt on compression type with application of preformed insulated cover, heat shrinkable tubing or plastic insulated tape acceptable for all sizes.

B. Below Grade: Splices below grade shall be in handholes and shall be made watertight with epoxy resin type splicing kits similar to Scotchcast.

2.3 TERMINATIONS

A. Compression set, bolted or screw terminal.

B. Conductors #12 and smaller shall utilize eye or forked tongue type compression set terminator when termination is to a bolted or screw set type terminal block or terminal cabinet.

2.4 PLASTIC CABLE TIES

A. Nylon or Equivalent, locking type.

PART 3 EXECUTION

3.1 GENERAL

A. Install all wiring in Raceway unless shown or specifically authorized otherwise.

3.2 WIRE SIZE

A. No. 12 AWG minimum for power and lighting circuits.

B. Provide solid wire for No. 14 AWG and smaller, and stranded conductors for No. 12 AWG and larger (600) volts.

C. STS

D. In addition to the factory testing of all equipment and cable, the Contractor shall test all wiring connections for continuity and ground before any fixtures or other loads are connected. Tests shall be made with a 500V minimum DC "Megger" type tester. If tests indicate faulty insulation (less that 2 megohms), such defects shall be corrected and tested again. Contractor shall provide all apparatus to make tests and shall bear all expenses of required testing. Routine operation tests shall be made on all pieces of equipment to demonstrate that working parts are in operating condition. Results of all tests shall be recorded and submitted to the Architect. The Contractor shall immediately replace all parts, which fail to pass the test.

E. All circuits both in and out of the building shall test out free of grounds, short circuits and other defects.

F. Check and record catalog number and ampere size of controller overload heaters installed, nameplate full-load amperes, and actual operating amperes of each motor. IMPORTANT: Submit recorded data in triplicate to the Engineer. Check proper load balance on the electrical system, direction of rotation, lubrication, and overload protection of all motors before placing in operation.

G. The final test of all equipment shall be made on dates designated by the Architect/Engineer and all readings shall be made in his presence.

H. Feeders shall be checked to ensure all phases are energized before connecting to their respective motors. Each motor shall rotate in the proper direction for its respective load. Prior to rotation test, all bearings shall be inspected for proper lubrication.

I. Minimum megger test for equipment shall be as follows:

Equipment Maximum Voltage Rating	Minimum Test Resistance
1,000-Volts or less	2 Megohms

J. Provide certification of torque values for feeder and service entrance conductors per equipment manufacturer's recommendation.

3.3 CONDUCTOR SIZES, REFERENCED ON PLANS

A. Copper, type THW or RHW unless noted.

3.4 PULLING

A. Use no mechanical means for pulling No. 8 AWG conductors and smaller. Powdered soap stone or approved spray cream shall be the only lubricant used.

3.5 STRIPPING INSULATION

A. Do not ring the cable, always pare or pencil.

3.6 TAPING

A. If used shall be half lapped synthetic tape.

3.7 CONDUCTORS IN PANELS AND SWITCHBOARDS

A. Conductors in panels, switchboards, and terminal cabinets shall be neatly grouped and formed in a manner to "Fan" into terminals with regular spacing.

3.8 CABLE SUPPORTS

A. Provide conductor support devices as required by code in vertical cable runs.

3.9 RACEWAY SIZES REFERENCED ON DRAWINGS

A. Raceways are sized for copper, type THW, unless otherwise noted. Size all Raceways per code unless specifically noted to be larger on the drawings.

END OF SECTION

SECTION 260526 - GROUNDING AND BONDING

PART 1 GENERAL

1.1 WORK INCLUDED

A. A grounding system shall be provided for neutral ground and equipment ground as required by code.

1.2 RELATED DOCUMENTS

A. Section 260000 –Electrical General Conditions

PART 2 PRODUCTS

2.1 GROUNDING CONDUCTORS

A. Copper, code size, with physical protection where subject to damage. Bare or green insulated.

2.2 GROUND RODS

A. 3/4" x 8'-0" copper clad steel.

PART 3 EXECUTION

3.1 GENERAL

A. Provide all grounding for electrical systems and equipment as required by codes and as specified herein.

3.2 GROUND RODS

A. Provide as shown and/or required. Connect the ground conductor to each rod.

3.3 SIZE OF GROUND WIRE

A. As required by code. Where ground wire is exposed to physical damage or is used outside of building, protect with conduit.

3.4 GROUND CONNECTION OF WATER PIPING

A. Metal internal piping shall be grounded, as part of this Contract. This includes jumpers for dielectric fittings.

3.5 CONCRETE ENCASED ELECTRODE

A. Provide in accordance with NEC 2017, Article 250.52 (A) (3) and Article 250.68 (C) (3).

3.6 GROUND CONNECTION OF BUILDING STEEL

A. Structural metal shall be grounded, as part of this Contract.

3.7 CONNECTION TO THE GROUND BUS

A. Provide connections in accordance with the codes; including but not limited to raceway systems, switchboard/panelboard frames, service neutral, separately derived systems, electrically operated equipment and devices. No device or equipment shall be connected for electrical service which has a neutral conductor connected to a grounding conductor or to the frame within the device or equipment.

3.8 METHOD OF CONNECTION

A. Make all ground connections and ground cable splices by thermal welding. Grounding lugs, where provided as standard Manufacturer's items on equipment furnished, may be used.

3.9 FLEXIBLE RACEWAY

A. Shall not be used for grounding. Install separate ground conductor in all flexible raceway.

3.10 PVC RACEWAY

A. Install separate ground conductor in all PVC raceway as required per code.

3.11 DROP CORDS

A. Shall have a grounding wire and be connected with a grounding type plug and receptacle.

END OF SECTION

SECTION 260532 OUTLET AND PULL BOXES

PART 1 GENERAL

1.1 WORK INCLUDED

A. Provide outlet and pull boxes to enclose devices, permit the pulling of conductors and for wire splices and branches.

1.2 RELATED SECTIONS

A. Section 260000 – Electrical General Conditions
B. Section 260519 – Wires and Cables
C. Section 262726 – Switches and Receptacles

1.3 REFERENCE STANDARDS

A. NECA 1 - Standard for Good Workmanship in Electrical Construction; 2015.
B. NECA 130 - Standard for Installing and Maintaining Wiring Devices; 2010.
C. NEMA 250 - Enclosures for Electrical Equipment (1000 Volts Maximum); 2020.
D. NEMA FB 1 - Fittings, Cast Metal Boxes, and Conduit Bodies for Conduit, Electrical Metallic Tubing, and Cable; 2014.
E. NEMA OS 1 - Sheet-Steel Outlet Boxes, Device Boxes, Covers, and Box Supports; 2013.
F. NEMA OS 2 - Nonmetallic Outlet Boxes, Device Boxes, Covers and Box Supports; 2013 (R2020).
G. NFPA 70 - National Electrical Code; Most Recent Edition Adopted by Authority Having Jurisdiction, Including All Applicable Amendments and Supplements.
H. SCTE 77 - Specification for Underground Enclosure Integrity; 2017.
I. UL 50 - Enclosures for Electrical Equipment, Non-Environmental Considerations; Current Edition, Including All Revisions.
J. UL 50E - Enclosures for Electrical Equipment, Environmental Considerations; Current Edition, Including All Revisions.
K. UL 508A - Industrial Control Panels; Current Edition, Including All Revisions.
L. UL 514A - Metallic Outlet Boxes; Current Edition, Including All Revisions.
M. UL 514C - Nonmetallic Outlet Boxes, Flush-Device Boxes, and Covers; Current Edition, Including All Revisions.
N. UL 1203 - Explosion-Proof and Dust-Ignition-Proof Electrical Equipment for Use in Hazardous (Classified) Locations; Current Edition, Including All Revisions.

1.4 SUBMITTALS

A. Product Data
   1. Outlet and Pull Boxes (Interior & Exterior)
   2. Nameplate Types
   3. Sound Attenuation Products
B. O&M Manuals
   1. All Product Data

1.5 PRODUCT DATA

A. The contractor shall include product data identifying compliance with all pertinent items of Part 2 of this specification. All pertinent options shall be identified in the product data submittal. If options have not been identified clearly, the submittal will be rejected.

PART 2 PRODUCTS

2.1 INTERIOR WIRING

A. General: Outlet and pull boxes shall be pressed drawn steel, zinc coated with plaster ring where applicable. Welded boxes not allowed. Four-inch size minimum. Large pull boxes shall be fabricated sheet steel, zinc coated or baked enamel finish, with return flange and screw retained cover.

B. Surface Metal Raceway: Boxes of same Manufacture and to match Raceway. Boxes to accommodate standard devices and device plate.

C. Concrete and Masonry: Boxes for casting in concrete or mounting in masonry walls shall be the type specifically designed for that purpose.

D. Install pull boxes so as to be accessible after completion of building construction.

E. Ceiling outlet boxes shall be galvanized octagonal 4 inch, 1-1/2-inch-deep (without fixture stud), 2-1/8 inches deep (with fixture stud).

2.2 EXTERIOR WIRING

A. Above Grade: Outlet and junction boxes shall be cast or malleable iron or shall be cast of corrosion resistant alloy compatible with Raceway to which it is connected. Pull boxes shall be fabricated of heavy gauge steel and hot dipped galvanized. All boxes shall have gasketed covers.

B. Below Grade: Where exposed to earth, boxes (handholes) shall be constructed of precast concrete with size, configuration, cover, grates and reinforcing as required by the particular installation.

1. Manufacturer: Similar to Utility Vault 3030LA with base or Fogtite J11 Type 2 with base. Lid shall be H-20 rated where installed in traffic areas. Where not exposed to earth shall comply with Paragraph 2.02A above.

C. Exterior outlet boxes shall be weather resistant and rain tight, with appropriate covers, gaskets and screws.

PART 3 EXECUTION

3.1 ANCHORING

A. All boxes shall be firmly anchored directly or with concealed bracing to building studs or joints. Boxes must be so attached so that they will not "Rock" or "Shift" when devices are operated.

3.2 FLUSH MOUNTING

A. Except for surface mounted boxes or boxes above accessible ceilings, all boxes shall have front edge (box or plaster ring) even with the finished surface of the wall or ceiling.

3.3 ELECTRICAL OUTLETS

A. General: Coordinate the work of this section with the work of other sections and trades. Study all Drawings that form a part of this Contract and confer with various trades involved to eliminate conflicts between the work of this section and the work of other trades. Check and verify outlet locations indicated on Architectural Drawings, door swings, installation details, layouts of suspended ceilings and locations of all plumbing, heating and ventilating equipment.

B. Centered on Built-In Work: In the case of doors, cabinets, recessed or similar features, or where outlets are centered between such features, such as between a door jamb and a cabinet, make these outlet locations exact. Relocate any outlets which are located off center.

C. Above Counter: Locate device outlet just above backsplash or 6” above counter if there is no backsplash. Review casework shop drawings prior to final rough-in.

D. Vertical and Horizontal Relationships: Where more than one outlet is shown or specified to be at the same elevation or one above the other, align them exactly on centerlines horizontally or vertically. Relocate as directed all such outlets (including lighting, receptacle, power signal and thermostat outlets) which are not so installed, at no additional cost to Owner.

E. Device Outlet Height: Measure from the finished floor.

*Switches	4 Feet, Set Vertically, to Top of Box
*Receptacles, Telecommunications	18 Inches, Set Vertically to Centerline
Other	As Noted or as Directed by Architect
∗ *Heights may vary.*	*See Drawings for additional information*

F. Ceiling Location: For acoustical material locate outlet either at the corner joint or in the center of a panel, whichever is closer to the normal spacing. Locate all outlets in the same room in the same panel location.

G. Installed In Sound Walls: Boxes installed in sound walls shall not be installed back-to-back. All boxes shall be separated by one stud space and shall be interconnected with flex conduit with a 90° loop. Where stud space separation is not possible, utilize sound attenuating mastic around each box. 3M Fire Barrier Moldable Putty Pads MPP+ (2.54 mm minimum) or similar.

3.4 ELECTRICAL WORK IN COUNTERBACKS, MILLWORK AND CASEWORK

A. Provide as shown and/or specified. Provide templates, where required, to other trades for drilling and cutting to ensure accurate location of electrical fixtures (outlets and devices) as verified with the Architect. Provide all wiring, devices, plates and connections required by said fixture.

3.5 CONNECTION TO EQUIPMENT

A. For equipment furnished under this or other Divisions of the Specifications, or by others. Provide outlet boxes of sizes and at locations necessary to serve such equipment. An outlet box is required if the equipment has pigtail wires for external connection, does not have space to accommodate circuit wiring used. Study equipment details to assure proper coordination.

3.6 BLANK COVERS

A. Provide blank covers or plates over all boxes not covered by equipment.

3.7 JUNCTION OR PULL BOXES

A. Pull and junction boxes shall be installed as shown, and to facilitate pulling of wire and to limit the number of bends within code requirements. Boxes shall be permanently accessible and shall be placed only at locations approved by the Architect.

B. In suspended ceiling spaces, boxes shall be supported from the structure independently from ceiling suspension system.

C. The Drawings do not necessarily show every pull or Junction Box required. The Contractor is permitted to provide boxes deemed necessary by him for his work when installed in accordance with these Specifications.

3.8 BOXES CONTAINING MULTIPLE DEVICES

A. Boxes containing emergency and normal devices are permitted only with steel barriers Manufactured especially for the purpose of dividing the box into two completely separate compartments.

B. Device Boxes Containing Multiple Devices and Wiring Rated Over 150 Volts to Ground and Over 300 Volts Between Conductors are permitted only with steel barrier manufactured especially for the purpose of dividing the box into separate compartments for each device having exposed live parts.

3.9 NAMEPLATES

A. For all line voltage junction boxes, provide nameplate indicating circuit numbering of all wiring in junction box.

END OF SECTION

SECTION 260533 - RACEWAY

PART 1 GENERAL

1.1 WORK INCLUDED
- A. Provide Raceway System complete.

1.2 RELATED DOCUMENTS
- A. Section 260000 –Electrical General Conditions

PART 2 PRODUCTS

2.1 GALVANIZED RIGID STEEL CONDUIT (GRS)
- A. General: Hot dipped galvanized.
- B. Fittings: Galvanized malleable iron or noncorrosive alloy compatible with galvanized conduit. Erickson couplings, watertight split couplings (O.Z. type or equivalent) permitted. Running thread or set screw type fittings not approved.

2.2 INTERMEDIATE METAL CONDUIT (IMC)
- A. General: Hot Dipped galvanized.
- B. Fittings: Galvanized malleable iron or noncorrosive alloy compatible with galvanized conduit. Erickson couplings, watertight split couplings (O.Z. type or equivalent) permitted. Running thread or set screw type fittings not approved.

2.3 ELECTRICAL METALLIC TUBING (EMT)
- A. General: Hot dipped galvanized.
- B. Fittings: Raintight; steel or malleable iron type using a split corrugated compression ring and tightening nut or stainless-steel locking disc. Steel set screw fittings are acceptable for dry locations. Indenter, drive-on and pressure cast or die cast type set screw are not acceptable.

2.4 FLEXIBLE METAL CONDUIT (FMC, LFMC)
- A. Dry Locations:
  1. General: Galvanized flexible steel for dry locations only.
  2. Fittings: Malleable iron or steel, Thomas and Betts "squeeze" type or equal.
- B. Damp and Wet Locations:
  1. Liquid Tight: Polyvinyl chloride (PVC) weatherproof cover over flexible steel conduit.
  2. Fittings: Thomas and Betts "liquid tight" or equal.

2.5 SURFACE METAL RACEWAY
- A. Formed steel or aluminum type. Standard factory finish. Where color choice is available, consult Architect/Engineer for selection prior to ordering.

2.6 RIGID NON-METALLIC CONDUIT (PVC)
- A. Schedule 40 rigid polyvinyl chloride type unless otherwise noted.

2.7 RIGID ALUMINUM CONDUIT
- A. Permitted only in specified locations.
- B. Fittings copper free cast aluminum.

PART 3 EXECUTION

3.1 GENERAL
- A. Install Raceway concealed in construction unless noted otherwise on the Drawings or specifically approved in writing by the Architect/Engineer.
- B. Cut Raceway ends square, ream and extend maximum distance into all couplings and connectors.
- C. Provide and install manufactured end caps on all Raceway ends during construction to prevent the entrance of water or dirt. Tape, as a cover, not permitted.
- D. Swab out all Raceways before pulling wires.

E. All elbows for GRS and PVC Raceway shall be factory radius bends. For all other Raceway, use factory radius bends of 1-1/4" and larger diameter.
F. Raceway shall not penetrate sheet metal ducts unless permission is granted by Architect/Engineer. All sleeves shall be provided for Raceway installation.
G. Provide two (2) - 3/4" C.O. stub into accessible ceiling space from all recessed panelboards or systems terminal boxes.

3.2 GALVANIZED RIGID STEEL CONDUIT
A. All Connections shall be watertight. Install for all Raceways in concrete or where subject to damage.

3.3 INTERMEDIATE METAL CONDUIT
A. Intermediate metal conduit is permitted as a substitute for galvanized rigid steel conduit except where GRS is required by code.

3.4 ELECTRICAL METALLIC TUBING
A. Install for wiring in masonry, frame construction, furred ceilings and above suspended ceilings. May be used for exposed work in unfinished areas where not subject to damage. Where construction involves masonry work, surface cut masonry units wherever such masonry units are to remain unplastered or uncovered in complete construction.

3.5 RIGID ALUMINUM CONDUIT
A. May be used in lieu of galvanized rigid steel conduit where Raceway is run above grade or inside of buildings; rigid aluminum conduit not permitted where Raceways are encased in or attached to concrete or are below grade.

3.6 RACEWAYS UNDERGROUND
A. Galvanized rigid steel conduit - painted with two coats of bitumastic paint - or galvanized rigid steel conduit with 15 mil. polyvinyl chloride (PVC) jacket (repair abrasions with PVC base paint or PVC)
B. PVC Raceways may be used for underground runs when permitted by code. Field bends, when necessary, shall be formed only with factory recommended heater. Penetrations through floor and walls shall be galvanized rigid steel conduit. PVC, if used, shall be increased in size from that shown to include code required ground wire. Bends in excess of 10 degrees shall be GRS.
C. Arrange and slope Raceways entering building to drain away from building.
D. Ground wires shall be provided in all PVC Raceway.

3.7 INSERTS, SHIELDS AND SLEEVES
A. Furnish and set in place, in advance of pouring slabs and walls, all inserts and sleeves needed to execute Division 26 equipment installation.
B. Where supports in slabs are required after wall has been poured, use a drilled-in threaded insert, installed as recommended by Manufacturer.
C. Sleeves shall be provided for all wall penetrations.

3.8 RACEWAYS THAT STUB UP THROUGH FLOOR
A. Install at such depth that the exposed Raceway is vertical and no curved section of the elbow is visible.
B. PVC Raceway shall not be stubbed through floors.

3.9 SEALING OF RACEWAY PENETRATIONS
A. Exterior Wall Surfaces Above Grade: Seal around all penetrations with caulking approved by Engineer. For concrete construction above ground level, cast Raceway in wall or core drill wall and hard pack with a mixture of equal parts of sand and cement.
B. Exterior Surfaces Below Grade: Cast Raceway into wall (or floor) or use manufactured seal assembly (such as O.Z. type "FSK") cast in place.

C. Roofs: Provide mopped, lead, roof jack where Raceway penetrates roof membrane.
D. Fire Rated Floors, Walls, Ceiling/Roofs: Concrete or masonry, seal around Raceway penetration with Dow Corning 3-6548 silicone RTV foam or approved equal. Plaster or gypsum wallboard, seal around Raceway penetration with plaster, fire tape per local Fire Marshal's requirements.

3.10 SEALING OF RACEWAYS

A. Seal interior of all Raceways which pass through buildings roofs, floors or through outside walls of the building, above or below grade. Seal on the end inside the building using duct sealing mastic, non-hardening compound type, specially designed for such service to maintain the integrity of the seal of the wall, floor or roof. Pack around the wires in the Raceways.

3.11 HANGARS FOR RACEWAYS

A. In suspended ceiling spaces Contractor may, at his option, attach 1/2" or 3/4" EMT Raceways to the ceiling suspension system where such system is structurally suitable on independent wire secured at both ends; in which case, provide clips manufactured for the purpose.
B. When more than two Raceways will use the same routing, group together on a patented channel support system (such as Unistrut).

3.12 SURFACE METAL RACEWAY

A. Install parallel to building surface (i.e., wall, ceiling, floor). Fasten to surface as recommended by Manufacturer. Mount so Raceway is in the least obvious location. Shall be used in lieu of conduit in finished areas.

3.13 FLEXIBLE CONDUIT

A. Flexible conduit shall be used only for connection to motors and equipment subject to vibration with 90 degrees loop minimum to allow for isolation and for lay-in fluorescent fixtures above T-Bar ceilings. For fixture installations, one end of flex must terminate in rough-in junction box. Flex conduit shall not be installed over 6' long or used to connect from fixture to fixture. Use liquid tight for pumps, equipment which is regularly washed down, and equipment in damp locations. Provide ground wire.

3.14 PULL CORDS

A. Nylon type shall be included in all installed empty Raceway.

END OF SECTION

SECTION 260534 - METAL CLAD CABLE (TYPE MC) AND FITTINGS

PART 1 GENERAL

1.1 WORK INCLUDED

A. Provide Metal Clad (Type MC) Cable for power, control and lighting systems.

B. Provide wiring connections and terminations.

1.2 RELATED DOCUMENTS

A. Section 26 0000 –Electrical General Conditions

1.3 REGULATORY REQUIREMENTS

A. UL 1569. Products shall be tested, approved and labeled/listed by Underwriters Laboratories, Inc.

1.4 USES PERMITTED

A. MC Cable is permitted to be used for 20amp lighting and power circuits where routing is above grade, concealed and the installation meets the requirements of NEC 330.

B. MC Cable shall NOT be used for homerun circuits from the fixture, receptacle, or equipment to the panelboard. Hard conduit must be used from the panelboard to the nearest accessible ceiling space to the panelboard.

C. MC Cable shall not be used for HVAC equipment.

PART 2 PRODUCTS

2.1 CABLE ASSEMBLY

A. Metal clad cable assemblies shall consist of 2, 3 or 4 current carrying conductors and an equipment ground conductor.

B. Conductors: Stranded Copper conductor, No. 12 AWG minimum or No. 10 AWG maximum. Installation methods shall be as specified under Part 3 - Execution.

C. Insulation: Conductor insulation shall be rated 600-volt, Type THHN, 90°C dry.

D. Fillers: Fillers shall be non-hygroscopic and non-wicking.

E. Binder: Core binder shall be corrugated polyester.

F. Sheath: The metal sheath shall be galvanized steel or aluminum. The metal sheath shall be extruded onto the cable or applied longitudinally, then wrapped and welded. The sheath shall then be corrugated for greater flexibility. The sheath shall be color coded for the voltage and phases served.

G. Jacketing: When PVC jacketing is required, the jacket shall be flame-retardant PVC with a temperature range of -40°C to 90°C.

H. Equipment Grounding Conductor: The equipment ground wire shall be of the same construction as specified in 2.02.A and 2.02.B and be at a minimum the same size as the current carrying conductors. The insulation color shall be green.

2.2 FITTINGS

A. Fittings shall be UL listed and identified for such use with metal clad continuous corrugated sheath cable, with or without PVC jacketing, as is appropriate for the installation.

B. Connectors shall be of steel or malleable iron and shall be a squeeze type clamp connector with a locknut for non-jacketed metal clad cable. Compression gland type connectors shall be used for jacketed metal clad cable.

PART 3 EXECUTION

3.1 INSTALLATION – POWER AND LIGHTING SYSTEMS WIRING

A. All wiring shall be installed in compliance with the latest version of the National Electrical Code and all other applicable codes and standards as indicated elsewhere in these specifications.

B. Use of metal clad cable shall be permitted only for lighting, equipment and receptacle branch circuits. Metal clad cable shall not be permitted in locations designated to be hazardous Class I, II or III.
C. Metal clad cable shall be permitted only for motor circuits where the motor being served is less than ½ HP and rated for 120V, single phase. Metal clad cable is not permitted for HVAC equipment and controls.
D. Metal clad cable shall only be installed concealed within walls and above ceiling interstitial spaces. Where there is no ceiling interstitial space, metal clad cable may not be used.
E. Bends in corrugated sheath metal clad cable shall be made so that the cable will not be damaged. The radius of the curve of the inner edge of any bend shall not be less than seven (7) times the diameter of the metallic sheath.
F. Metal clad cable is not permitted to connect branch circuits to fumehoods, gas storage cabinets, or chemical storage cabinets.
G. No metal clad cable shall be installed in ventilation ducts or plenums.
H. Conductors in Enclosures: Provide neat and workmanlike installation with conductors tied with T&B Ty-Rap, Virginia Plastics, or equal, nylon wire ties in terminal cabinets, gutters and similar locations.

3.2 FITTINGS

A. Fittings used for connecting metal clad cable to boxes, light fixtures or other equipment shall be UL listed and identified for such use.
B. Cable preparation for installation of fittings shall follow manufacturer's instructions. The manufacturer's specialized tools shall be used for preparing cable ends for installation of fittings.
C. The cable end shall be cut square to ensure flush seating of the cable into the fitting. Fitting securement screws shall be properly torqued. Cable ends shall be fitted with insulating bushings intended for the type of metal clad cable being installed.
D. For jacketed metal clad cable, the outer jacket shall be removed to the length specified by the fitting manufacturer's instructions. Remove oils or solvent by-products from the outer jacket of the cable. The cable end shall be cut square to ensure flush seating of the cable into the fitting. The fitting gland nut shall be properly torqued to the manufacturer's specifications.

3.3 ARRANGEMENT AND SUPPORT

A. Metal clad cables shall be run parallel with walls or structural elements. Vertical runs shall be plumb; horizontal runs level and parallel with structure, as appropriate. Groups shall be racked together neatly with both straight runs and bends parallel and uniformly spaced.
B. Metal clad cables shall be securely fastened in place at intervals of not more than six feet, with suitable clamps or fasteners of approved type, and all vertical conduits shall be properly supported to present a mechanically rigid and secure installation.
C. Metal clad cable installed parallel to framing members, such as studs, joist, or rafters, shall be supported so that the nearest outside surface of the cable is not less than 1-1/4 inches from the nearest edge of the framing member. Where this distance cannot be maintained, the cable shall be protected by a steel plate, sleeve, or equivalent that is at least 1/16-inch thick.
D. Maintain at least 6-inch clearance between metal clad cables and other piping systems. Maintain 12-inch clearance between metal clad cables and heat sources such as flues, steam pipes, and heating appliances.
E. No metal clad cable shall be fastened to other conduits or pipes or installed so as to prevent the ready removal of other pipes or ducts for repairs.

F. Individual metal clad cables hung from roof structure or structural ceiling shall be supported by split-ring hangers and wrought-iron hanger rods. Where three (3) or more metal clad cables are suspended from the ceiling in parallel runs, use steel channels, Kindorf, Unistrut or equal, hung from 1/2-inch rods to support the conduits. The conduit on these channels shall be held in place with metal clad cable clamps designed for the particular channel that is used.

G. Secure metal clad cable support racks to concrete walls and ceilings by means of cast-in-place anchors; die-cast, rustproof alloy expansion shields; or cast flush anchors. Wooden plugs, plastic inserts, or gunpowder driven inserts shall not be used as a base to secure conduit supports.

H. Metal clad cable shall be supported immediately on each side of a bend and not more that one (1) foot from an enclosure where a run of metal clad cable ends.

I. Use of cable tray:
   1. The sum of the cross-sectional areas of all cables shall not exceed the maximum allowable cable fill area allowed by NEC Tables 392.9, 392.9(E) and 392.9(F).
   2. Cables shall be installed in a single layer with a maintained spacing of not less than one cable diameter between cables.
   3. Ampacity of cables installed in cable tray shall meet the requirements of NEC 392.11.

3.4 INSPECTION AND TESTS

A. General: The electrical installation shall be inspected and tested to ensure safety to building occupants and operating personnel and conformity to Code

B. Measure and record insulation resistance of all power and control wiring including insulation resistance of all equipment:
   1. The insulation resistance of each circuit phase-to-phase and phase-to-ground shall be measured. For circuits rated less than 600 volts, the resistance shall not be less than 2 megohms.
   2. Systems rated above 240 volts shall be tested with a 1000-volt Megohmeter. Circuits rated 240 volts and below shall be tested with a 500-volt Megohmeter. The D.C. potential shall be applied for thirty (30) seconds.

C. The contractor shall record test readings and submit certified test to the Engineer for review and acceptance approval before energizing respective circuits.

END OF SECTION

SECTION 262416 - PANELBOARDS

PART 1 GENERAL

1.1 RELATED DOCUMENTS

A. Section 260000 – Electrical General Conditions

1.2 WORK INCLUDED

A. Provide all panelboard equipment, complete; dead front type.

PART 2 PRODUCTS

2.1 PANELBOARD TYPE

A. Panelboards shall be rated at proper voltage and current for intended use with busbars of copper or aluminum. Panels shall be 3-phase, 4-wire, 100% neutral, unless noted otherwise. Where aluminum is utilized, all lugs shall be of an approved compression type. Provide multiple lugs where conductors in parallel or "feed through" are shown on the Drawings.

B. Conductor Connectors shall be bolted to busbars using Grade 5 bolts and Belleville washers. Feeder conductor connectors shall be rated for 75 Degree C. wire when 75 Degree C. wire is indicated.

C. Panelboards shall have a separate ground bus bonded to the panelboard frame.

D. Where 120-Volt, 15- or 20-Amp breakers are intended for switching loads they shall be of type rated for switching duty labeled "SWD."

2.2 ACCEPTABLE MANUFACTURERS

A. General Electric

B. Square-D

C. Siemens

D. Cutler-Hammer

2.3 CIRCUIT BREAKERS

A. The following interrupting capacity, 10,000 AIC Symmetrical shall be considered minimum. Other ratings shall be as specified on panel schedules shown on the Drawings. Series rating of breakers is not allowed.

B. Mount breakers in all panelboards so that breaker handles operate in a horizontal plane. Bolt in type only. Provide common trip on all multiple pole breakers.

C. Where noted, provide spare breakers, complete for future connection of wiring circuits. Where "Space" is indicated for breakers, provide all bussing and breaker mounting hardware in the panelboard, provide steel knockouts in dead front metal closure of unused part of panel. If any steel knockouts are removed, provide breakers in such spaces or approved cover plates. Open spaces are not permitted.

D. For multi-wire branch circuits, provide approved breaker handle ties where required by NEC 210.4.

2.4 CABINET FOR EACH PANELBOARD

A. Flush or surface, as indicated; tight closing doors without play, when latched. Where two cabinets are located adjacent to each other in finished areas, provide matching trim of the same height. Where a remote-controlled switch or contactor is mounted in any panelboard, mount on same frame as panelboard interior with screw retained access door in dead front shield; common door over circuit breakers and remote-controlled device. Where flush mounted, provide two (2) 3/4" conduits to accessible ceiling space for future expansion.

B. All conduits for future expansion shall stub into a junction box, where located above grade, and shall be sealed in the panel.

C. Provide cabinets of sufficient dimensions to allow for future expansion and addition of circuit breakers within the panelboards as indicated on panel schedules.

D. Provide cabinet front with full-height hinged door. One door over the interior and an additional hinged dead front cover over interior and wireway (door-in-door).
Full-height front cover hinged to box with concealed trim clamps. Provide flush door locks.
E. Provide lock for each cabinet door. All Electrical Distribution Equipment Locks shall be keyed identically. Key system shall match existing. Supply Owner with minimum six keys.
F. Fasten panelboard front with machine screws with oval counter-sunk heads, finish hardware quality, with escutcheons or approved trim clamps. Clamps accessible only when dead front door is open are acceptable. Surface mounted panelboards with fronts greater than 48 inches vertical dimension shall be hinged at right side in addition to hinged door over dead front.
G. Finish: Provide factory prime coat for cabinets to be located in finished areas. Where cabinets are located in unfinished areas, standard lacquer or enamel finish, gray or blue-gray color, shall be substituted for factory prime coat.

2.5 SYSTEM OF NUMBERING AND BUS ARRANGEMENT
A. Shall be as shown on the Panel Schedules on the Drawings.

2.6 PANELBOARD NAMEPLATE
A. Provide engraved and filled (or color layer - engraved through outer layer) plastic nameplate with ½-inch high characters (for panel name); attached with screws to each NEMA 1 panelboard front. White on black, include voltage, phases, wires and minimum A.I.C. Rating in 3/8-inch characters.
B. Nameplate color shall be:
1. Emergency System: White letters on red
2. Normal System: White letters on black

PART 3 EXECUTION

3.1 MOUNTING
A. Secure in place with top of cabinet at 6'-0", unless otherwise noted. Top of cabinet and trim shall be level. Firmly anchor cabinets directly or with concealed bracing to Building Structure. When panels are not located in or directly on a wall, provide a support frame of formed steel channel which is anchored to the floor and Ceiling Structure. Interiors shall not be installed until Structure is totally enclosed. Where panels are mounted adjacent to each other, the top edges shall be at the same height.

3.2 CIRCUIT INDEX
A. For each branch circuit panelboard provide a typewritten index listing each circuit in the panelboard by number with its proper load designation. Mount with a transparent protective cover inside cabinet door. Listing shall match circuit breaker arrangements, typically with odd numbers on the left and even numbers on the right. Room numbers used shall be final room numbers used in the building as verified with the Owner, and not room number assigned on Plans.

3.3 CABINET PAINTING
A. Cabinets furnished as prime painting shall be field painted to match color of adjacent wall. (See Division - Painting).

3.4 SPACE
A. Verify space available with equipment sizes and Code Required Working Clearances prior to Submittal of Shop Drawings.

3.5 GROUNDING
A. Provide separate ground busbar for all panels supplying isolated ground circuits.

3.6 FEED THROUGH AND DOUBLE LUGS

A. Provide feed through or double lugs with amperage equal to the incoming feeder amperage unless shown as larger.

END OF SECTION

SECTION 262419 - MOTOR CONTROLLERS

PART 1 GENERAL

1.1 RELATED DOCUMENTS

A. Section 260000 – Electrical General Conditions

1.2 WORK INCLUDED

A. Work under this section includes all requirements for motor controls to be furnished under the electrical portion of the work on all electrical motor driven equipment. Individually mounted starters shall be provided by Division 26 Contractor. Motor controls shall conform to NEMA Standards for each specific purpose.

B. The Division 26 Contractor shall furnish all motor controllers not included with equipment furnished under other divisions of these specifications or by Owner. The Division 26 Contractor shall install all motor controllers including all controllers not factory assembled into equipment furnished under other divisions of these specifications or by Owner.

1.3 MOTOR VOLTAGE INFORMATION

A. Voltages available are 240 Volt, 1-Phase, and 115 Volt Single-Phase.

B. Circuits are designed (in general) for motors as follows:

1. Smaller than 1/2 H.P. - 115 Volts, Single Phase 1/2 H.P. and larger - 200 Volts, 3 Phase.

C. Verify motor sizes and voltages provided under other divisions and notify General Contractor immediately if any discrepancies are noted.

1.4 REGULATORY REQUIREMENTS

A. Provide motor protection switches of the appropriate NEMA size. For units not using NEMA rating, use equivalent NEMA size.

PART 2 PRODUCTS

2.1 MOTOR STARTERS

A. Magnetic Motor Starters: Unless noted otherwise, shall be full voltage non-reversing with three overloads sized to suit nameplate amperes of motor served, motor "On" and "Off" pilot lights, "Hands-Off-Auto" switch, and auxiliary contacts for interlocking.

B. Combination Motor Starter/Disconnect: Shall be fused switch type with all features of Paragraph A above. In addition, provide disconnect switch auxiliary contacts for disconnection of externally powered control circuits where applicable. Fuses shall be sized in accordance with motor manufacturer's requirements.

C. Manual Starters: Shall be toggle switch or push-button type, lockable in the "Off" position, with overload relays, pilot light and enclosure pursuant to Paragraph D below. Manual starters shall only be used where specifically shown or called out on the drawings and only for single phase, fractional horsepower motors.

D. Enclosures: All motor controllers shall be contained in an enclosure suitable for the environment in which the controller is mounted, and shall be weatherproof when exposed to weather.

E. Overload Devices: Shall be melting alloy or bimetallic type. One overload shall be provided for each phase. Provisions shall be made for resetting the overload devices from outside the starter enclosure. Provide ambient compensated overload devices only when the motor is at a constant temperature and the controller is subject to a separate, varying temperature. Automatic reset overload devices are not permitted.

2.2 ACCEPTABLE MANUFACTURERS

A. Square D

B. Allen Bradley

C. General Electric
D. Cutler-Hammer
E. Siemens

2.3 NAMEPLATES

A. Pursuant to Section 260000, Paragraph 2.05, provide nameplates permanently attach (with screws on NEMA 1 enclosures) on each controller, nameplates with the following information: Load served, voltage, phase, short circuit rating, panel/circuit number and where applicable fuse size and type.

PART 3 EXECUTION

3.1 FINISHED AREAS

A. In finished areas, mount motor protection switches flush and install suitable cover plates.

3.2 HEATERS

A. Install heaters co-related with full-load current of motors provided.

3.3 OVERLOADS

A. Set overload devices to suit motors provided.

3.4 SUPPORTS

A. Securely mount to equipment, wall or acceptable mounting frame.

3.5 CONNECTION TO MECHANICAL EQUIPMENT ON ROOFS

A. The Contractor shall coordinate all roofing penetrations with the general contractor and roofing contractor to assure that the roofing warranty is maintained.

B. Attachment of conduits to the roof to serve mechanical equipment and devices shall comply with Section 260533.

3.6 MECHANICAL EQUIPMENT NAMEPLATE RATINGS

A. The Division 260000 Contractor shall verify that the nameplate ratings of the mechanical equipment, when they arrive on site, are consistent with the ampacity called out on the drawings. The Contractor shall bring any discrepancies to the Engineers attention prior to installation of conduit and wiring.

END OF SECTION

SECTION 262726 - SWITCHES AND RECEPTACLES

PART 1 GENERAL

1.1 RELATED DOCUMENTS

A. Section 260000 – Electrical General Conditions

1.2 WORK INCLUDED

A. Provide all wiring devices and plates.
B. No push-in, friction, spring type terminals allowed.
C. All devices color shall be white, unless otherwise noted.

PART 2 PRODUCTS

2.1 ACCEPTABLE MANUFACTURERS

A. Hubbell
B. Pass & Seymour
C. Leviton
D. Cooper

2.2 SWITCHES

A. "Industrial Specification Grade", quiet type, rated 277-volt, 20 amp, unless noted, with plastic handle. Single pole, double pole, 3-way, or locking type as required. Meets Fed. Spec. WS-896 Provide matching styles and colors in other devices as required for the conditions of installation. Hubbell CS1221, Cooper CSB120, Leviton 1221, and P&S 20AC1
B. Interchangeable type shall be rated same as above.
C. Momentary Contact Line Voltage Switches: Single pole, double throw, 3-wire, normally open. Rating same as above.
D. LED Dimmer: LED dimmer switch shall be rated at 16 amps), 120V or 277V, 60 hertz. Dimmer switch shall have LED vertical slide with positive “off” button. Suitable for single-pole and 3-way. Dimmer shall have a radio/TV interference filter. Dimmer shall be matched with dimming driver. See Specification Section 265000. Leviton ‘Renoir II’ series.
E. Timer Switch: Provide electronic light timer switch where indicated on drawings. The timer switch shall be connected to the room lighting and fan. The timer switch shall be programmable for time-out from 5 minutes to 2 hours. Set timer for standard 20 minutes time-out period, time scrolls up, flash off, beeper on. Manufacturer: Watt Stopper – Inteli-switch Digital Time Switch.
F. Motor rated switches: Switches serving as motor disconnecting means shall be horsepower rated with overload relays and meet requirements as stated above. See manual starters in Section 262419, ‘Motor Controllers’.
G. Low Voltage Switches & Lighting Controls: Refer to specification Section 260923 Network Digital Lighting Control System.
H. Device plates shall be Hubbell and Cooper Type 302 stainless steel.

2.3 RECEPTACLES

A. In All Unfinished Areas & Non-occupy able spaces: Provide "Industrial Specification Grade", Duplex NEMA 5-20R configuration (20-Amp, 120-Volt) unless shown otherwise. Must have “rivetless ground” contact manufactured as an integral component of the external ground screw terminal. Meets Fed Spec. WC-596 Hubbell HBL5362, Cooper 5362, P&S 5362A, and Leviton 5362.
B. In All Finished Areas & Occupied spaces: Provide heavy duty specification grade; general purpose 20 amp. 125-volt, Nema 5-20R, 2P, 3W decora plus duplex receptacle, straight blade, commercial grade, self-grounding, back & side wired. Leviton 16352T

C. Self-Testing Ground-Fault Circuit-Interrupter Duplex Receptacles: 20A. 125V AC; 2-pole, 3 wire grounding; 10,000 amps current interrupting; green light indicator when power is 'on'; red light indicator when device is in the tripped position; Red "EOL" (end of life) indicator with rapid flash when the unit has reached end of life and/or cannot provide GFCI protection. Provide GFI receptacles where required by code.

D. Switched Receptacles: Switched receptacles shall be smooth nylon face with either 2 controlled faces or one controlled face split circuit hot tab, permanently marked for use with automatic control systems, back and side wired.

E. AFCI Tamper-Resistant Duplex Receptacles: 15 Amp. 125 volt; 20-amp feed-through, tamper resistant, AFCI; back and side wired. Leviton AFTR1.

F. Weather Resistant (WR) / Ground Fault Circuit-Interrupter (GFCI) Outdoor Duplex Receptacles: NEMA 5-20R. Hubbell GFTR201 or equal, for 20 Amp, 125-Volt AC.

G. Special Purpose Receptacles: For special purpose receptacles, see drawings for voltage, amperage, and phase. Provide with matching plug delivered to the Owner.

H. Power Cord Reels: Corrosion resistant cast aluminum, UL Type 1, multi-position guide arm, positive latch mechanism that automatically maintains desired cord length and ratchet lock. White industrial reel with yellow portable outlet box, Ground Fault Protection Device module and one (1) 30-amp receptacle, 25 ft #10/3 SJO, 30 Amp, 250 VAC. Provide with ball stop and mounting bracket. Hubbell – ACA10325-BC.

1. Ground Fault Protection Device (GFPD): Class 1, UL listed, 120 VAC, 20-30 Amps rated, 60 hZ, 30 mA trip level. 25mS max @ 500-ohm fault, manual reset, Nema 4X wet location rated. Cable configuration shall be 2 feet yellow, 10/3 SJEOOW cable with male & female connectors on both ends to match power cord reel and apparatus truck receptacle configurations. Provide with in-line status indicator with reset button. North Shore Safety – PGFI series.
2. Provide one (1) for each drop cord and/or power cord reel located in the Apparatus Bay.

I. Plugmold: Steel with stainless steel finish, 125V, 36" long with six (6) outlets, tamper-resistant. Provide with end or back feed fitting, couplings, mounting clips and quick-sire connectors. Legrand/Wiremold – PMKTR.

2.4 OCCUPANCY SENSORS

A. Provide self-adjusting occupancy sensor light switching devices for control of lighting in all rooms and offices shown on drawings. Sensors shall be ceiling or wall mounted to provide adequate coverage. Occupancy sensors shall be "Leviton", Model OSC20-M0W for ceiling mounting, OSW12-M0W for wall mounting, complete with OSP20-RD0 power pack and associated mounting hardware. Provide "Leviton" ODSOD-ID wall switch sensors where shown. Sensors shall be wired to maintain switching and circuits shown on drawings.

2.5 DEVICE PLATES

A. Interior: Plates for receptacles other than NEMA 5-20R shall have ampere rating, voltage and phase engraved in the plate. Plates for recessed boxes shall be Hubbell and Cooper Type 302 stainless steel. Attachment screws shall match finish of plate. Plates for surface mounted boxes shall be of pressed stainless steel with size to fit exactly the box used.

B. Exterior: Intermatic # WP1010MC, for vertical mount and # WP1010HMC for horizontal mount, or equivalent for receptacles. Metal cover shall be raintight while-in-use.

2.6 LABELING

A. For NEMA 5-20R receptacles, each device shall be identified with a clear label with black typing stating the panel & circuit number.

B. For receptacles other than NEMA 5-20R, the cover plate shall have the ampere rating, voltage and phase engraved on a phenolic label and attached to the cover plate.

2.7 MULTIOUTLET ASSEMBLY (WHEN SHOWN)

A. Provide assemblies complete, including necessary fittings and hardware with circuits as indicated on Plans and outlet spacing as indicated. All assemblies shall contain ground wire. Wiremold or equal.

PART 3 EXECUTION

3.1 MOUNTING

A. Rigidly fasten each device to the outlet box at proper position with the wall to bring receptacle flush with plate or switch handle the proper distance through the plate.

3.2 ORIENTATION

A. Set Switches vertical with handle operating vertically, up position "ON".

B. Set Receptacles vertical with ground slot down.

3.3 DEVICE PLATES

A. Shall be stainless steel for each new wiring device and for each telephone and signal equipment outlet, except where equipment mounted thereon covers the outlet box completely.

B. Provide new covers on existing outlet boxes being reused.

3.4 RECEPTACLE GROUNDING

A. Provide bare bonding wire between receptacle grounding terminal and box. Plaster ear screws connecting frame to the box will not be acceptable for grounding.

B. Provide green insulated grounding conductor in all branch circuits supplying ground-fault circuit-interrupter type receptacles.

3.5 AMERICANS WITH DISABILITY ACCESS

A. Comply with all requirements of Washington State Americans with Disability and NEC 2014 codes.

END OF SECTION

SECTION 262813 - FUSES

PART 1 GENERAL

1.1 RELATED DOCUMENTS

A. Section 260000 – Electrical General Conditions

1.2 WORK INCLUDED

A. Provide all fuses as required. Provide three (3) spares of each size and type required. Fuses shall not be installed until equipment is ready to be energized. This measure prevents fuse damage during shipment of the equipment from the manufacturer to the jobsite or from water that may contact the fuse before the equipment is installed. Final tests and inspections shall be made prior to energization of the equipment. This shall include a thorough cleaning, tightening, and review of all electrical connections and inspection of all grounding conductors. All fuses shall be furnished by the Electrical Contractor. All fuses shall be of the same manufacturer.

PART 2 PRODUCTS

2.1 MAINS, FEEDERS, AND BRANCH CIRCUITS

A. Circuits 0 to 600 amperes shall be protected by current limiting BUSSMANN LOW-PEAK Dual-Element Fuses LPN-RK (250 volts) or LPS-RK (600 volts). All dual-element fuses shall have separate overload and short-circuit elements. Fuse shall incorporate a spring activated thermal overload element having a 284°F. melting point alloy and shall be independent of the short-circuit clearing chamber. The fuse must hold 500% of rated current for a minimum of 10 seconds and be listed by Underwriters Laboratories, Inc., with an interrupting rating of 200,000 amperes r.m.s. symmetrical. The fuses shall be UL Class RK1 to maintain the Engineered protection of the system components.

B. Motor Circuits: All individual motor circuits with full load amperes ratings (FLA) of 480 amperes or less shall be protected by BUSSMANN LOW-PEAK Dual-Element Fuses LPN-RK (250 volts) or LPS-RK (600 volts). Larger H.P. motors shall be protected by BUSSMANN Type KRP-C Low-Peak Time-Delay Fuses of the ratings shown on the drawings. All other motors, (such as 1.0 service factor motors) shall be protected by BUSSMANN LOW-PEAK Dual-Element Fuses LPN-RK (250 volts) or LPS-RK (600 volts) installed in ratings of approximately 115% of the motor full load current except as noted above. The fuses shall be UL Class RK1 Dual Element Time Delay or Class L.

2.2 SPARE FUSES

A. Spare fuses shall be provided with a minimum of three of each ampere rating.
See Section 265000 for quantities of spare fusing required for ballasted light fixtures.

2.3 ACCEPTABLE MANUFACTURERS

A. Bussman

B. Little Fuse

PART 3 EXECUTION

3.1 FUSES

A. Install in all fusible devices provided under this Contract.

END OF SECTION

SECTION 262816 - DISCONNECTS AND FUSED SWITCHES

PART 1 GENERAL

1.1 RELATED DOCUMENTS

A. Section 260000 – Electrical General Conditions

1.2 WORK INCLUDED

A. Provided all disconnects, fused and unfused, required by code for equipment furnished under this and other divisions of these specifications and as shown on the drawings.

PART 2 PRODUCTS

2.1 ACCEPTABLE MANUFACTURERS

A. General Electric
B. Square-D
C. Siemens
D. Cutler-Hammer

2.2 DISCONNECTS

A. Switch shall be heavy-duty type, shall be quick-break and shall be horsepower rated. Switch shall have blades as required to open all ungrounded conductors and shall be single throw unless noted.
B. Enclosure shall have interlocking cover to prevent opening door when switch is closed. Door interlock shall include a defeating scheme, shall be padlockable in the "Off" position.
C. Enclosure shall be suitable for environment in which mounted. All exterior enclosures shall have a minimum raintight rating.

2.3 FUSED SWITCHES (OR FUSED DISCONNECTS)

A. Shall be as above with addition of fuse space and clips to accept only fuses as noted in Section 262813.
B. Fuses shall be sized in accordance with manufacturer's requirements of protected equipment.

2.4 NAMEPLATES

A. Provide nameplates on all enclosures and include the following information: Load served, voltage, phase, panel and circuit number. Construct and attach in accordance with Section 260000.

PART 3 EXECUTION

3.1 SUPPORTS

A. Secure solidly to wall or approved mounting frame. Disconnects supported only by Raceway are not acceptable.

3.2 SPLICES

A. Wiring space within enclosure shall not be used as a junction box.

3.3 INSTALLATION

A. All material installation shall be in accordance with manufacturers' recommendations and the provisions of applicable codes.
B. Fuses shall not be installed until equipment is ready to be energized.

END OF SECTION

SECTION 265000 - LIGHTING

PART 1 GENERAL

1.1 RELATED DOCUMENTS

A. Section 260000 – General Electrical Conditions

1.2 WORK INCLUDED

A. Provide the lighting system complete and operational.

B. Recessed fixtures installed in fire-resistive ceiling construction shall have the same fire rating as the ceiling or shall be provided with fireproofing boxes having materials of the same fire rating as the ceiling.

1.3 FIXTURE SCHEDULE MANUFACTURER'S SERIES NUMBERS

A. Are a design series reference and do not necessarily represent the number, size, wattage or the type of lamp, ballast or special requirements as specified hereinafter.

1.4 SUBMITTALS

A. Shall be neatly and clearly marked to indicate the fixtures, lamps and ballasts fully comply with contract documents. When substitute fixtures are submitted (if permitted) the data shall clearly cross reference (written or highlighted) that the substitute fixture complies with every detail of the specified fixture. Fixtures not fully complying with contract documents are not permitted.

PART 2 PRODUCTS

2.1 METAL PARTS

A. Interior Fixtures: Steel or aluminum with 300°F, baked enamel finish, brushed aluminum with baked acrylic clear lacquer finish, or stainless steel with a brushed finish, manufacturer's standard color unless specified otherwise.

B. Exterior Fixtures: Corrosion resisting metal, a (non-ferrous, stainless steel or special finish) and in all cases suitable for outdoor service without tarnishing or other damage due to exposure; manufacturer's standard colors unless specified otherwise; cadmium plate all metal parts concealed by canopies, including screws, plates and brackets. All exposed fasteners shall be tamperproof.

C. Recessed Type: Fixtures shall have housing containing an integral thermal device pursuant to NEC 410.115(C).

2.2 LIGHT TRANSMITTING COMPONENTS

A. Virgin acrylic or polycarbonate plastic (0.125-inch-thick overall minimum), UV stabilized or glass. Shall be contained in a captive metal frame that remains attached to the fixture when door is in open position.

2.3 SPECIAL PARTS

A. Adapters, Plates, Brackets and Anchors: Provide where required by construction features of the building to suitably mount lighting fixture. All such appurtenances and mounting methods shall be approved by the Architect/Engineer prior to fabrication and installation.

B. Low Voltage Transformers: Provide and install where required to power individual or linear runs of low voltage light fixtures.

2.4 LAMPS

A. Solid-State Lighting: Fixtures shall have a lumen maintenance life expectancy (L70) of > 50,000 hours, a CRI of > 82, and a CCT of 3500K. Each solid-state fixture model shall be tested in accordance with IES LM-79.

2.5 LED DRIVERS/POWER SUPPLIES

A. The LED drivers/power supplies shall meet the following criteria:

1. Drive mode: Constant Current or Constant Voltage depending on the LED configuration for the light fixture.

2. Output currents: 250 mA – 1000 mA
3. Output voltages: 6VDC – 48VDC
4. Input voltages: 110 to 277 VAC; 50/60 Hz
5. Power factor at >0.90 @ full load
6. Line regulation accuracy: +/- 2%
7. Load regulation accuracy: +/- 3%
8. Greater than 80% efficient
9. Output over-voltage, output over-current and output short circuit protection with auto recovery
10. Limited power source output to allow for class 2 wiring.
11. Flicker Free 0-10V Dimmable to 10% light output.
12. Minimum of 50,000 hour rated life.
13. IP66 rated
14. 5 Year Warranty.
15. Acceptable Manufacturer: Advance Xitanium or approved equal.

B. Emergency Battery Backup: Provide as indicated. Each fixture unit shall consist of an automatic power failure device, test switch operable from outside of the fixture, pilot light visible from outside the fixture, automatic code-compliance testing, and fully automatic solid-state charger in a self-contained power pack. Emergency unit shall operate unattended and require no maintenance for a period of five (5) years.
   1. Constant Power Emergency Drivers for LED lamps
      a. The emergency driver shall meet the following requirements:
         1) Provide constant wattage to the LED array for 90 minutes without degradation of the light output.
         2) UL classified for factory or field installation.
         3) Universal voltage input.
         4) UL certified output class 2 compliant and automatically senses the LED array forward voltage requirements.
         5) Suitable for use in damp locations.
         6) The emergency drivers shall be manufacturer tested to assure compatibility with the LED driver within the fixture.

2.6 MOUNTING FOR PENDANT FIXTURES

A. Rigid type, with not less than 5 thread engagement at each end, consisting of iron pipe, with brass or aluminum tubing casing, or painted tubing not less than 0.040 inches thick.
B. Aircraft cable, stainless steel, sized appropriately by manufacturer for weight and seismic zone.
C. Provide a canopy for each fixture hanger except where fixture conceals the outlet box directly without a canopy.
D. Provide a safety chain for all glass pendant fixtures.

2.7 OUTDOOR LIGHTING STANDARDS

A. Provide watertight insulating fuse in the base of lighting standards to individually protect each lighting fixture; buss Style "HEB" or approved, waterproof fuseholder with Buss fuse of appropriate capacity and voltage. Provide fuse for each hot circuit wire; do not fuse neutral.
B. Provide concrete preformed round poles with base plate for bolting to concrete foundation. Natural exposed aggregate finish. Height as noted on drawings.
C. Provide concrete foundations as shown on drawings. Field verify locations with Architect prior to installation of bases.

2.8 EXIT SIGNS

A. Fronts: Cutout stencils made of minimum #20-gauge sheet steel or sheet aluminum with red glass or plastic back of the cutout. Mount fronts either on concealed hinges or pull-out type with chain catch. Removable cutout arrows shall indicate direction of travel.

PART 3 EXECUTION

3.1 LIGHTING FIXTURES - GENERAL

A. Size and mounting height from finished floor to bottom of fixture as indicated on the drawings. Verify mounting provisions prior to the ordering of fixtures. Fixtures shall be UL listed for the location, and application in which they are installed.

B. Ceiling fixtures shall be coordinated with and suitable for installation in, on or from the ceiling as shown. Installation and support of fixtures shall be in accordance with NFPA 70 and manufacturer's recommendations.

C. Recessed fixtures installed in seismic areas shall be installed utilizing specially designed seismic clips.

D. Suspended fixtures installed in seismic areas shall have 45° swivel hangers and shall be located with no obstructions within the 45° range in all directions. The stem, canopy and fixture shall be capable of 45° swing.

3.2 DIFFUSERS AND ENCLOSURES

A. Install lighting fixture diffusers only after construction work, painting and clean up are completed. Prior to final acceptance, remove all lamps, reflectors and diffusers, wash, rinse and reinstall.

3.3 ADJUSTMENT OF FIXTURES

A. Make all final spotlight and adjustable light settings under the direction of the Architect/Engineer during a scheduled period of time prior to the completion of the project. Include costs for all equipment and personnel expenses required for adjustment.

B. For fixtures with indirect lighting, notify Engineer prior to installation of any circumstance where the fixture lamp source will be within 12" of ceiling.

3.4 SUPPORT OF FIXTURES

A. Recessed Troffer Type: For fixtures supported by the ceiling suspension system, provide integral tabs, which rotate into position after fixture is lifted into the ceiling cavity. Provide two safety chains secured to structural members above suspended ceiling. Circuit connection shall be through use of 60-inch flexible conduit from a rigidly supported junction box. For plaster or GWB ceilings, provide a plaster frame compatible with light fixture.

B. Recessed Downlight Type: Mount in frames suitable for the ceiling, with the recessed portion of the fixture securely supported from the ceiling framing. For fixtures supported by a ceiling suspension system, provide two safety chains secured to structural members above suspended ceiling.

C. Surface and Pendant Mounted Type:

D. Where mounted on accessible ceilings, hang from structural members by means of hanger rods through ceiling or as approved.

E. Where ceiling is of insufficient strength to support weight of lighting fixture, provide additional framing to support as required. Fixtures shall be supported from structure with seismic bracing independent of ceiling.

F. For Pendant Mount Type: Provide a unistrut channel for mounting fixtures entire fixture length unless light fixture is designed specifically for supporting itself. Provide 3/8-inch thread rod secured to structural members for support of unistrut channel.

G. Continuous Runs of Fixtures: Straight when sighting from end to end, regardless of irregularities in the ceiling. Where fixtures are so installed, omit ornamental ends between sections.

3.5 LOCATION

A. Mount to the dimensions shown on the drawings. Mount at quarter points where no dimensions appear. Architect shall specify mounting locations where no dimensions appear and quarter point mounting is impractical or not indicated on the drawings.

B. Refer to details, mechanical drawings, and coordinate with mechanical Contractor for equipment and ductwork mounted in ceilings to prevent conflict with light fixtures prior to installation. If conflicts cannot be resolved with the Mechanical Contractor, notify Architect/Engineer.

3.6 SPARE FIXTURES

A. Self-Luminous Exit Sign: Provide two (2) Self-Luminous Exit Signs Lithonia # DSW1X Green or Red to match EX-1. Install at locations as directed by Architect.

3.7 CONCRETE FOUNDATIONS

A. Install at locations shown taking care to provide soil compaction same as required under paving to avoid settling and tilting of pole. Provide for all steel, concrete or aluminum poles shown. Concrete foundations shall have a minimum raceway sweeps of
90 degrees and anchor bolts shall be accurately set in foundations using a template supplied by the pole manufacturer. For concrete work and grouting, see Division 3 of the specifications. When concrete work has cured, base plates shall be leveled and grouted in place. Pole anchor bases shall then be set on base plates, leveled plumb on foundations, and secured with holding nuts.

3.8 FIXTURE TENTING

A. Contractor shall coordinate ceiling types with architectural drawings and specifications and provide equivalent fire rated enclosures above all light fixtures which penetrate rated ceilings.

END OF SECTION

SECTION 270000 - LOW VOLTAGE SYSTEMS GENERAL REQUIREMENTS

PART 1 GENERAL

1.1 RELATED DOCUMENTS

A. Drawings and general provisions of the Contract, including General Conditions, Supplementary Conditions and Divisions 0 and 1 Specification Sections, apply to work of this Section.

B. Specification Section 260000 Electrical General Conditions.

1.2 SCOPE AND RELATED DOCUMENTS

A. The work performed under this specification shall be of good quality and performed in a workmanlike manner. In this context "good quality" means the work shall meet industry technical standards and quality of appearance. The Owner reserves the right to reject all or a portion of the work performed, either on technical or aesthetic grounds. The Installing Vendor/Contractor shall make all corrections as needed, to the satisfaction of the Architect.

B. Provide system documentation and Owner training as specified below.

C. An important item of the construction process for this project is the Pre-Construction Kick Off Meeting, which shall take place PRIOR to submittal of equipment data sheets.

1. The General Contractor shall coordinate the scheduling of the meeting.
2. The Owner's Representative and the Owner's IT Department Representative will be present for the meeting.
3. The General Contractor, Electrical Contractor, and a representative from EACH Section shall attend this coordination meeting.
4. As this meeting is essential for early coordination and shop drawings, billing for each low voltage discipline will not be approved until after the low voltage Pre-Construction Kick Off Meeting has taken place.
5. The estimated time is approximate and shall be extended for each Installing Vendor/Contractor as necessary.
6. EACH Installing Vendor/Contractor shall submit their list of coordination items through the construction channels a minimum of 14 days in advance of the meeting for Owner review.
   a. Review EACH specific Section for the sub-section titled "Coordination" for a minimum list of items to be discussed during the Pre-Construction Kick Off Meeting.

D. The requirements of the conditions of the Contract, Supplementary Conditions, General Requirements, or other work specified to provide a fully functional system for EACH specific low voltage Section listed below includes, but is not limited to the following sections:

			Pre-Construction Kick Off Meeting	
			Estimated time for EACH Section	Submit questions 14 days in advance
1.	Section 260000	Electrical General Conditions	30	
2.	Section 270000	Low Voltage System General Requirements	10	
3.	Section 270528	Pathways for Communications Systems	10	
4.	Section 272000	Data & Voice Infrastructure	10	

E. Applicable Standards: All work shall be performed in accordance with the latest revisions of the following standards:

1. International Building Code
2. International Fire Code

3. NEC (National Electrical Code)
4. Telecommunications Architectural Standards in Washington State Government
5. ANSI-J-STD-607-A - Commercial Building Grounding and Bonding Requirements for Telecommunications

F. EACH Installing Vendor/Contractor for their Section shall possess a current and valid Washington State 06 Electrical Low Voltage License.

1.3 QUALITY ASSURANCE

A. Device or wiring arrangement shown on the drawings represents the intent of the system. If additional equipment (that may not be shown) is required to make a fully functional system, then provide such equipment as required.

B. Each specification Section that is governed by these specifications shall be provided, installed, commissioned, and warranted by a local Installing Vendor/Contractor that meets the following requirements for the equipment manufacturer that is being submitted for:

1. All equipment for EACH specification Section shall be provided and installed by a single supplier.
2. Have installed a minimum of three (3) systems within the past five (5) years.
3. Maintain a 24-hour emergency service program using manufacturer trained technicians. Shall respond to service calls within 24 hours during and after the warranty period.
4. The Installing Vendor/Contractor shall be manufacturer approved to purchase the equipment, have a local office staffed with manufacturer-certified installers that are capable of maintaining, servicing, and warranting the equipment being installed; who are full time employees and are capable of programming, testing, inspecting, maintaining, warranting, and inventorying parts for the life of the system; and shall be located within a 100-mile radius of the project site.
5. Offices that require staff from another “branch office and/or company office” outside of this radius are not acceptable.

C. Prior to completion of the installation, the Installing Vendor/Contractor shall provide:

1. A preventative maintenance agreement which shall, at the Owner’s option, become effective at the end of the warranty period.
2. A proposal for offsite monitoring services where applicable.

1.4 SUBSTANTIAL COMPLETION

A. In addition to the “Substantial Completion” requirements, when applied to EACH of the specification Sections identified in “Scope and Related Documents”, Substantial Completion shall be defined as follows:

1. The stage in the progress of work where the work or designated portion is sufficiently complete in accordance with the Contract Documents, so that the Owner can utilize the work for its intended use.
2. ALL of the requirements listed in “Testing & Complete System Functionality” shall be met. Once all conditions have been met, this shall be deemed Substantial Completion. These requirements shall be completed on or before the Substantial Completion date listed in the Contract Documents.
3. The Owner reserves the right to withhold up to 10% of the funds for each low voltage system until that system has been shown, to the full satisfaction of the Owner, to function properly.

1.5 DOCUMENTATION

A. Document Format:

1. All documents shall be generated on a PC. Provide these documents electronically, with the As-Built Documentation (where applicable).
   a. Data sheets, installation manuals, technical documents, brochures, and user manuals may be in PDF format.
   b. Power Point presentation(s) shall be in MS-Power Point.
   c. Test forms and other project-specific documents shall be in an editable format, either MS Word or MS Excel.
   d. Drawings and details shall be in AutoCAD 2013 or newer.

1.6 SUBMITTALS AND SHOP DRAWINGS

A. Submittals and Shop Drawings shall be provided for EACH low voltage system specification section number and shall contain, but not be limited to the items listed below:

B. Submittals – Prior to installation of any equipment, the Installing Vendor/Contractor shall provide the Architect with seven (7) copies of submittals for approval. With the approval of the Architect, electronic submittals in PDF format may be substituted for hard copy. Provide the following:

1. A complete materials list of the quantity of each device, the manufacturer, model number, and description of the equipment for each individual system component or device that will be provided. This list shall precede the data sheets.
   a. Each system component or device data sheet shall have and indicating arrow next to each component or device that is being submitted.
   b. Each submittal shall be by EACH low voltage system specification section number and each submittal shall have its own list of data sheets. Combined submittal sections are not authorized.

C. Additional Shop Drawing Requirements:

1. For additional shop drawing requirements, refer to EACH low voltage system specification section number, in addition to what is listed below.

D. Shop Drawings – Prior to installation of any equipment, the Installing Vendor/Contractor shall provide the Architect with seven (7) copies of submittals for approval.

1. Shop Drawing Requirements: The Installing Vendor's/Contractor's complete and full-size set of Shop Drawings shall be issued in the following format:
   a. They shall be clear and legible.
   b. The same sheet size as the Contract Drawings (i.e., 30" x 42").
   c. A minimum of 1/8" text height shall be used for all text, symbol text, and subscript text.
   d. Scale of Drawings:
      1) Site plan drawings shall be the same scale as issued in the Contract Documents.
      2) Floor plan drawings shall be 1/8" =1'-0", unless directed to do otherwise.
   e. The Electrical Legend, Wire Legend, Load and Battery Calculations, Riser Diagram, Sequence of Operation Info, Wiring Details, and Mounting Details shall precede the Site Plans and Floor Plans.
   f. All sheets, including the cover, shall include a title block along the edge of each of the drawings that, when the drawings are rolled up, the following information shall be visible:
      1) The system-specific sheet number
      2) Project name, specification section number and section title name

3) Floor name, area, and/or section of the building (Use the name of the area and/or floor description that is on the Contract Drawings.)

g. Architectural information on the Contract Drawings shall be included on the Installing Vendor's/Contractor's Shop Drawings, including, but not limited to: match lines, grid lines, grid bubbles, key plan, and enlarged floor plans.

h. Electrical information on the Contract Drawings shall be included on the Installing Vendor's/Contractor's Shop Drawings, including, but not limited to: all applicable general notes and applicable construction notes for each of the floor plans. Where enlarged plans are shown on the Contract Drawings, include this in the Installing Vendor's/Contractor's Shop Drawings to show the room and ALL equipment within the room to help facilitate and coordinate the installation of the low voltage equipment for all systems.

2. Cover Sheet: The first page of the shop drawings shall be a cover sheet to include the following items:
   a. Owner's project information:
      1) Site Information:
         (a) Name of site, address, city, and zip code of where the installation shall take place.
   b. Installing Vendor's/Contractor's project information:
      1) Business name
      2) Local office address of the Installing Vendor/Contractor
      3) Primary contact person's name, phone number, and email address who is responsible for the long-term management of the Owner's System.
   c. Provide a Sheet Index which assigns a sheet number and unique name for each sheet that is included in the shop drawing submittal package. As part of the sheet index, list every sheet that is part of the system shop drawing package. On the left side of the Sheet Index, provide two columns: "Included" and "Not Included". Include a check box, and provide a check in each box for all sheets that are included or not included in each submittal.
      1) Each sheet shall have a system-specific sheet number, and shall match the Contract Drawing sheet numbering system (i.e., E4.02 shall be FA-4.02 [for Fire Alarm], E4.02 shall be LAN-4.02 [for Local Area Network]).
3. Legend Information: From left to right, provide the following information for EACH device:
   a. Use the symbol on the legend of the contract drawings
   b. List the manufacturer's name
   c. List the manufacturer's model number
4. Provide a logical description of the device.
   a. Provide the back-box requirements and related information. At a minimum, this shall include:
      1) The height, width, and depth of each required back box for each symbol on the legend.
      2) If the device is a back box or comes with a back box (e.g., control panel, power supply, enclosure, etc.) then provide the height, width, and depth of the dimensions.
      3) Indicate if this device back box is going to be installed flush, semi-flush, or surface-mounted.

5. Wire Legend: Provide a listing of the cable manufacturer, model number, cable rating, size of conductors, quantity of conductors, and color of each conductor. Use the format in the sample “Wire Legend” as it applies to each system (see the sample at the end of this specification). Provide a cable identification naming scheme (as defined within these specifications).
    a. The Wire Legend shall include the cable manufacturer and model number for EACH of the following types of cables (as applicable to the project):
        1) Conduit/Raceway Cable.
        2) Open Cabling.
        3) Wet Rated Cable.
        4) Aerial Rated Cable.
        5) EACH cable and EACH cable type shall have a different letter designation.
6. Load and Battery Calculations: For EACH control panel, power supply, and/or amplifier for EACH system, at a minimum show the following amp draw, circuit, and battery calculations:
    a. The total amp draw load in standby or non-active mode.
    b. The total amp draw load with all devices active and in a maximum load condition.
    c. Provide the spare power information that is available for future additional devices and/or equipment.
        1) Include the quantities of spare circuits that are available (where applicable).
    d. Circuit calculations:
        1) The quantity of each device per circuit.
        2) The amp draws per device per circuit (where applicable). (This is not applicable to addressable devices that receive their power from an addressable data loop. Simply include the maximum number of devices than can be placed on each addressable loop and the number of addressable devices that are included on each addressable loop for this project).
        3) The total amp draw load per circuit.
        4) The cable length distance of each circuit.
        5) The gauge size of wire used for each circuit.
        6) The total line loss for each circuit.
        7) Factor the line loss and Amp Draw to show the actual voltage available at the end of each circuit (after the last device).
        8) Include in the design layout the requirements of “Spare Capacity” in Part 2 of this specification (where applicable).
    e. Battery backup:
        1) All batteries shall be sized to provide at least 20% spare capacity. Include this information in all calculations.
        2) For fire alarm, include all calculations that are required by the Authority Having Jurisdiction.
    f. Uninterruptible Power Supply(s) (UPS):
        1) For systems that include a UPS, provide the maximum load (allowed by the UPS manufacturer) that EACH UPS is capable of providing, and list each item and its maximum load that will be connected to the UPS. Include the total load of all equipment connected to the UPS, and list the spare capacity available.

7. Riser Diagram: Provide a system one-line Riser Diagram that shows the entire system. List the following:
    a. The head-end equipment and IP addressed devices. Show the connection to the WAN (where applicable).
        1) Show each location (the MDF and EACH designated IDF separately).
        2) Show each cable type, size, and quantity between the MDF and each designated IDF location.
        3) Show EACH device in the MDF and each designated IDF location (control panel, CPU, DVR, server, power supply and terminal cabinet) for each applicable system, the room name that each major system component is located in, and the connection to the headend equipment.
        4) Show all field devices with their respective room names and/or numbers and connections to their associated equipment.
        5) Show all field devices with their respective address point (where applicable).
8. For the Fire Alarm System ONLY, provide a detailed sequence of operation matrix that meets or exceeds industry standards, and shows how the System will work. This includes, but is not limited to:
    a. All inputs and/or actions
    b. All outputs and/or controls
9. Provide all mounting details and mounting heights for:
    a. All headend equipment
    b. Racks (where applicable)
    c. Devices
10. Detailed Wiring Information:
    a. Show each individual conductor color for all wiring on the point-to-point wiring diagrams for each device.
    b. Show complete scale drawings of equipment, devices, wiring diagrams, and terminations of:
        1) Each control panel, CPU, DVR, etc.
        2) Power supply and/or amplifier
        3) Rack equipment (where applicable)
        4) EACH device type
        5) EACH terminal cabinet (where applicable)
11. Rack Layout:
    a. Show the intended equipment layout within the racks.
    b. Show blank filler plates in spaces where equipment is not installed.
    c. Indicate the rack unit size of each device or filler plate in the rack.
        1) If rack equipment is installed on the rear side of the rack, show rear view of the rack also.
12. The matrix as defined in the “System Device Naming Matrix” of each system specification (where applicable).
13. On the shop drawings, include a letter signed by the System Designer that is responsible for the design depicted in the submittals and on the shop drawings. The letter shall state that the equipment and shop drawings design conform to national, state, local codes as adopted by the local Authority Having Jurisdiction, and meet or exceed all of the performance requirements as outlined in the specifications.
    a. Designers shall provide the following:
        1) A “signature” line and signature of the designer.

2) A “printed name” line below (or to the right of) the signature line and the printed name of the designer.
3) A “date” line below (or to the right of) the printed name line and date of the design.

b. For fire alarm shop drawings, include the above information and the system shall be designed by one of the following (provide a copy of the supporting documentation):
1) NICET Level III Certified Designer
2) Registered Professional Engineer

14. Labels and Labeling:
a. On the drawings, label each rack, control panel, CPU, DVR, power supply, and terminal cabinet in a logical numeric sequence (e.g., for fire alarm power supplies, list them as FAPS-1, FAPS-2, etc.).
b. Cables: Generate an alpha-numeric label for each cable type and cable run.
c. For projects with multiple sites, all labeling shall be consistent for all sites.

15. Show floor plan layout of devices and the anticipated routing of cable runs on Shop Drawings. Include conduit requirements where cables are routed underground or through locations that will be inaccessible after construction. Ensure runs are parallel with all structural framing and routed in a neat and orderly fashion.

16. EACH device at EACH location shall be shown on EACH floor plan. The cabling for EACH device shall be shown from EACH device to the device that it shall be connected to. EACH cable shown on the floor plan shall be identified as described in the “Wire Legend” portion listed within this specification.
a. Floor Plans: show all system related devices and all equipment that the system specific shop drawings will interface to, on each of the floor plans. Provide cabling for each device and the related wire type (as shown on the “Wire Legend”) shown for each of the devices. Where multiple devices are on the same circuit or an addressable data cable is used, show all devices and their related cables.

17. EOL Supervision:
a. Indicate on the floor plan drawings where EACH of the end-of-line resistors is located (where applicable).

18. Addressable Device Information:
a. Show each device address next to each device (where applicable), and clearly display this information so that it is not confusing as to which address belongs to which device. For non-addressable devices that will be connected to an addressable module, show the device address next to each device and the addressable module that it will be connected to.
b. List the system address points using a logical numbering sequence for the devices on a single run.
c. Maintain the “Spare Capacity” requirements listed elsewhere in the specifications (where applicable).
d. Include the complete dip switch and/or rotary addressing scheme (used to set the device address for each addressable point) on the drawings.

19. Illuminated Graphic Maps (where applicable): Prior to the ordering or installing of any equipment, the Installing Vendor/Contractor shall obtain written approval by the Architect. Provide the Architect with seven (7) copies of submittals for approval. These shall be submitted with the Shop Drawings, but not be bound with the Shop Drawings submittal.
a. Provide the actual full-size scale drawing and artwork that will be provided to the Owner for a final product.

b. The drawing submittal shall be in color.

20. All drawing submittals shall be a complete and full set of the system. If drawings are required to be re-submitted, a full and complete set must be re-submitted. Partial system drawing sets will be rejected and the Installing Vendor/Contractor shall reissue a full set of drawings. Any re-submittals shall be provided at the Installing Vendor's/Contractor's expense.
21. The Installing Vendor/Contractor is responsible for assuring that the raceway size, raceway routing, wire quantity, wire size, and wire type is suitable for the equipment supplied. The Installing Vendor/Contractor shall review the proper installation method(s) for each type of device/equipment with the manufacturer's representative, and the AHJ, prior to rough-in.
22. Provide shop drawings that are usable for trouble-shooting purposes showing equipment/device locations, conduit routing, junction boxes, and connection wiring of entire system.

E. Contract Drawings shall not be used as Shop Drawings.

F. The Shop Drawings shall be system specific. For example: only fire alarm equipment and connections to other equipment that will be interfaced to the fire alarm shall be shown on the fire alarm drawings.

G. Floor plans for the project have been developed by the Engineer using AutoCAD software. These drawing files will be made available to the Installing Vendor/Contractor for development of Shop Drawings and/or As-Builts for a fee of $20.00 per sheet.

1.7 GOVERNING CODES AND CONFLICTS

A. If the requirements of this section, related sections, or the Project Drawings exceed those of the governing codes and regulations, then the requirements of this section, related sections, and the drawings shall govern. However, nothing in this section, related sections or the drawings shall be construed to permit work not forming to all governing codes and regulations.

PART 2 PRODUCTS

2.1 MATERIALS

A. Provide all equipment as defined in each specification and on the drawings.

B. All equipment, panels, power supplies, and devices shall be manufactured under the appropriate category by Underwriters Laboratories, Inc. (UL), and shall bear the UL label.

C. All equipment for each system shall bear the UL label. Partial or pending listings shall not be acceptable. It shall be the Installing Vendor's/Contractor's responsibility to ensure that these requirements are met, and replace any and all equipment up to and including the entire system, if these requirements are not met.

D. EACH of the specified Low Voltage Systems identified in PART 1 of these specifications including the design, devices and/or wiring arrangement shown on the drawings, represent that based on various equipment manufacturers. Any changes resulting from differences between the specified product and other manufacturers or substitute manufacturers, shall be the responsibility of the Installing Vendor/Contractor.

1. Substitutions of the specified equipment and/or supplier will be considered provided that sufficient documentation is provided to the Engineer which certifies that the equipment and/or supplier qualification meets the requirement of these specifications. Any request for substitution shall be submitted by the Installing Vendor/Contractor in writing so as to be received by the Architect not later than (10) ten days prior to the bid due date. Equipment that is approved by the Engineer will be issued by addendum prior to the bid date.

E. Refer to PART 1 for any equipment that is not specifically defined.

2.2 CONDITION OF MATERIAL

A. All equipment shall be new, in un-opened boxes, and be the most current model available for each component and/or device that is provided for this project. For products that use firmware, the most current version available shall be downloaded and installed at each component and/or device, prior to any programming being performed. Outdated or used equipment, as determined by the Architect, shall be removed and replaced by the Installing Vendor/Contractor at no cost to the Owner.

B. All equipment and components shall be installed in strict compliance with manufacturers' recommendations. Consult the manufacturers' installation manuals for all wiring diagrams, schematics, physical equipment sizes, etc., before beginning system installation. All materials shall be in working order as intended by the manufacturer, at the completion of the project.

2.3 TERMINAL CABINETS, TERMINAL STRIPS, ENCLOSURES AND OUTLET BACKBOXES

A. On-Site System Information Binder and Enclosure: EACH specification section identified on the first page of this specification shall have an Information Binder that shall be housed in a System Information enclosure. The enclosure shall have a hinged door with the text "(Section Title here) Information", with each specific system name silk screened onto the enclosure door, and shall bear the Underwriters Laboratories "UL" label. A "T-Turn" cam lock shall be used to keep the enclosure door closed, and a key shall NOT be required to open the enclosure. Use the following Space Age Electronics model number, or approved equal:

1. All systems (other than fire alarm): Model # YD9048DBXAA. Verify with the Architect the color of the enclosure(s) prior to ordering the enclosure. There shall be no additional charge to the Owner for changes to the color of the enclosure.
2. For the fire alarm: Model # YD9049DBXAA shall be red in color, have a hinged door, and have "Fire Alarm System Documentation" silk screened on the enclosure door.

B. Terminal Cabinets (TC):

1. See EACH Specification for terminal cabinet requirements (where applicable).

C. Terminal Strips:

1. See EACH Specification for terminal strip requirements (where applicable).

D. Enclosures:

1. Each system's control panel, power supply, TC, and other metal enclosures shall have the following:
   a. Use key operated locks to secure the enclosure (keyed so that a single key can lock and unlock all enclosure locks for the entire system), and provide ten (10) keys.
   b. Use some form of wire management that uses permanently secured fasteners (no double-back tape), and uses reusable and adjustable Velcro-style cable straps, which shall be installed approximately every four (4) inches within each enclosure.

E. Backboxes:

1. Each system backbox, with the exception of specific backboxes, shall be metal and installed specific to the system it is being used on.
   a. Provide Red Randl Industries Inc., 5 Square boxes or equal for all fire alarm devices.
   b. Provide Blue Randl Industries Inc., 5 Square boxes or equal for all A/V locations. Provide single gang mud ring for all A/V locations only requiring single gang faceplate and provide double gang mud ring for all A/V locations requiring double gang faceplate. See A/V schedule for more information.
   c. Provide Blue Randl Industries Inc., 5 Square box or equal for all telecom workstation locations with single gang mud ring unless noted otherwise.

2.4 LABELS AND LABELING

A. The alpha-numeric labeling shall be developed by the Installing Vendor/Contractor.

B. Label all equipment and cables in an identical fashion of a sequential manner.
C. The Installing Vendor/Contractor-proposed alpha-numeric labeling that is intended to be used to identify all components of the system shall be submitted for approval by the Engineer, with the submittal of equipment data sheets.
D. All labeling information shall be recorded on the As-Built drawings and all test documents shall reflect the appropriate labeling scheme.
E. Phenolic name plates shall be used for identification of the racks, control panel, power supply, terminal cabinet, and other appurtenances of each system in a logical numeric sequence. Use an alpha-numeric name of each device for each location (created by the Installing Vendor/Contractor) to identify the equipment on the Shop Drawings.
    1. The size of the plate shall be two (2) inches high by approximately eight (8) inches wide. Different colors of backgrounds may be used for each system (but Red shall only be used for fire alarm).
    2. The text color shall be white letters that are 3/4inch high and are 1/2inch in width.
F. Labeling of cables must be provided in the following locations: EACH system control panel, power supply, terminal cabinet, terminal strip, rack, other system related appurtenances, and all junction boxes. Label all cables as shown on the Installing Vendor's/Contractor's Shop Drawings.
G. All label printing shall be machine generated using indelible ink ribbons or cartridges, self-laminating labels shall be used on cable jackets, appropriately sized to the outside diameter of the cable, and placed within view at the termination point on each end.
    1. Temporary Labels: Shall consist of the following:
        a. Using a fine point permanent style marker, Sharpie or equivalent, to write directly onto the outer jacket of the cable, or use temporary tags.
        b. The Installing Vendor/Contractor shall take all precautions to use care when pulling the cable to ensure the integrity of the temporary label.
        c. Remove all temporary labels and tags prior to installing the permanent label.
    2. Permanent Labels: Labels shall be produced using an electronic labeler. Cabling shall be marked with a permanent, electronic printed label with a self-laminating clear wrapping to cover the printed label, and shall be secured to the outer jacket of the cable.
    3. Provide Brady Model # XSL-116-427 or approved equal.

2.5 SYSTEM CABLES

A. All cables shall be new.
B. All cable types shall be UL listed and rated to meet all code requirements for site conditions, including, but not limited to; underground, wet, plenum, and aerial requirements as mandated per N.E.C. and local AHJ requirements. The Installing Vendor/Contractor shall be responsible for ensuring that all cables meet all national codes, state codes, local codes, AHJ requirements, and each equipment manufacturers' requirements for a reliable, fully functional, and warrantable system, as intended. Do not exceed the wiring distance limitation of the equipment, devices, cables and/or conductors as recommended by the manufacturer of either the equipment and/or the cables for each installation application.
    1. Use the manufacturer recommended cables for EACH application and as required by code (e.g., raceway, open cabling, wet, and/or aerial).
    2. All cables that run through wet locations shall be UL listed for wet locations and be run in EMT wherever re-entering the building to the device location and the headend location to include ground floor box locations in slab and under slab, aerial locations and any location that it may be exposed to moisture.

3. All cables shall be stranded unless otherwise noted and/or recommended in writing by the manufacturer. CAT5 through CAT7 cables are excluded.
4. See PART 3 of this section, and of each system specification for more information.

2.6 PROOF OF DELIVERY FORM

A. When providing equipment to the Owner, the Installing Vendor/Contractor shall provide the following transmittal document and obtain the necessary signatures.
   1. The Installing Vendor's/Contractor's Transmittal Document is defined as:
      a. Company logo
      b. Name
      c. Address
      d. Telephone number
      e. Delivery date
      f. Installing Vendor's/Contractor's representative name that is making the delivery
      g. Quantity of each item
      h. Manufacturers' name and model number
      i. The exact same description of the device (as used on the Shop Drawings)
      j. Provide a "signature" line for the Owner's Representative
      k. Provide a "printed name" line for the Owner's Representative
      l. Provide a "date" line for the Owner's Representative

PART 3 EXECUTION

3.1 WORK ENVIRONMENT

A. General:
   1. The Installing Vendor/Contractor shall have implemented an OSHA approved safety plan at their place of business. All staff should adhere to it in their daily practice.
      a. Avoiding injury is the primary concern for this project. Use OSHA industry standards to avoid accidents.

B. Coordination with Other Trades:
   1. It is the responsibility of the Installing Vendor/Contractor to coordinate with all trades for this project. Maintain all requirements for project schedule deadlines, rough-in, installation, programming, training, and ensuring that the Owner receives a fully functional system as defined in this specification.

3.2 APPROVED EQUIPMENT AND PERMITS

A. No equipment shall be delivered to the job site until Shop Drawings have been reviewed and approved by the Architect.
B. An approved set of Shop Drawings shall be continuously available at the job site during construction, for review by the Architect.
C. Obtain all permits as required, prior to installation of any equipment. They shall be continuously available at the job site during construction, for review by the Architect.

3.3 CABLE INSTALLATION – GENERAL

A. Open Cable installation methods are acceptable for this project when they are above accessible ceilings or in attic spaces, provided that all requirements identified in this specification are met.
B. Open Cable installation methods are only acceptable where specifically indicated on the plans. All other cables shall be routed in conduit or similar approved raceway.
C. All cable types shall be rated to meet all code requirements for site conditions, including, but not limited to: underground, wet, and aerial requirements as mandated per N.E.C. and local AHJ requirements.

D. Do not exceed the wiring distance limitation of the equipment, devices, cables and/or conductors as recommended by the manufacturer of either equipment and/or cables for each installation application. The Installing Vendor/Contractor shall be responsible for ensuring that all cables meet all equipment manufacturers' requirements for a reliable, fully functional, and warrantable system, as intended.

E. Wiring insulation shall be one of the types required by NEC 725 16.

F. Cable Supports: Clamps, "D Rings", "J-Hooks", Hangers, and Velcro tie wraps are all acceptable ways to support cable. However, installation of these supports must be done with care so as not to cause crushing or distortion of the cable, nor cause tighter bends than the minimum radius permitted for each type of cable.
   1. See each specific section requirements that shall be applied to this project in addition to these requirements.

G. Allowable Cable Bend Radius and Pull Tension: In general, all cables cannot tolerate sharp bends or excessive pull tension during installation. The minimum radius bend shall be ten (10) times the cable outer diameter with no tensile load applied, and twenty times the cable outer diameter with a maximum tensile load of 25ft/lbs. applied during installation. The Installing Vendor/Contractor is responsible for maintaining the cable manufacturers' end Radius and Pull Tension at all times. Corrections to cable installation shall be made to the satisfaction of the Architect at no additional cost to the Owner.

H. Service Loops and Cable Management:
   1. Comb all wires for the duration of the cable run so they are neat, orderly, do not have excessive slack, and are not tangled, prior to any service loop, continuing through any service loop, or continuing into EACH enclosure and/or system rack.
      a. Provide a 10'-0" service loop of EACH device cable (a minimum of 2'-0" above the accessible ceiling, within 5'-0" of plan view) above EACH device.
      b. For ceilings that are open to structure, do NOT provide a service loops, except for the following locations:
         1) MDF rooms.
         2) IDF rooms.
         3) Electrical rooms.
         4) Storage rooms.
         5) Designated system equipment locations that are NOT in view of the public.
         6) Prior to rough-in, obtain Architect's approval.
   2. Cable Management shall be used to bundle all cables of like kind, separated by system type.
   3. See Systems Plywood Backboard Cabling, listed elsewhere in this specification, for more information.

I. The Installing Vendor/Contractor shall ensure that communications cable is installed with care, using techniques which prevent kinking, sharp bends, scraping, cutting, deforming the jacket, or other damage. During inspection, evidence of such damage will result in the material being declared unacceptable. The Installing Vendor/Contractor shall replace all unacceptable cabling at no additional expense to the Owner.

J. The Installing Vendor/Contractor shall order and install the exact cables as specified on the Installing Vendor's/Contractor's Shop Drawings. If at any time during the installation and through the warranty period, it is discovered that any cable other than what is called for on the Installing Vendor's/Contractor's drawings has been installed, the Installing Vendor/Contractor shall remove all effected cables and shall provide and install the correct cable, as required. The Installing Vendor/Contractor shall also provide the staff to monitor the building during the cable replacement period until the system is fully operational to the satisfaction of the Architect, without any additional cost to the Owner.

K. All horizontal cables shall be supported at a maximum of 4'-0" intervals with UL approved devices. At no point shall cables rest on, be tied to, or otherwise secured to electrical conduit, plumbing, ventilation ductwork, accessible ceiling and/or light fixture hangers, or any other equipment. Cable shall be secured to building supports or wire hangers (at the structure's ceiling) specifically designed to support cables and/or to additional blocks or anchors specifically installed for this purpose.

L. All open cabling and/or conduit shall be installed parallel or perpendicular to the structure. Open cable installations shall use insulated mounting supports or rings approved for such use. Wiring shall be installed near or on structural members as to minimize risk of physical damage by other trades or maintenance personnel servicing the equipment.

M. Installing open cabling and/or conduit on an exposed area of wall that could have been installed in a less conspicuous manner, especially where art or murals are to be painted, is NOT acceptable. Any installation that does not meet this requirement will be required to be removed, and to patched and painted to match adjacent surfaces to the satisfaction of the Architect. Then install the conduit, fasteners, and wire as required by the project, at no additional cost to the Owner in an acceptable manner that meets with the Architect's approval. Obtain direction from the Architect prior to rough-in, for areas that need clarification.
   1. In some cases, it may be more aesthetically appealing to install conduit down the wall to the floor and either through the floor or along the floor, to be less conspicuous. Contact the Architect for further clarification.

N. Conduit type and areas where conduit will be required for this project are:
   1. Provide EMT metal raceway in the following areas:
      a. Always conceal conduits within walls and/or ceiling spaces wherever possible.
      b. Where required by code. Provide conduit in all areas required by code, but no less than the following locations:
         1) To accessible ceiling spaces. Provide conduit from the device to accessible ceiling space where:
      c. Devices are wall mounted
      d. Devices re located on hard lid ceiling
      e. Devices are in an inaccessible area. An inaccessible area is defined as less than 2'-0" from an accessible ceiling tile.
         1) Unoccupied areas exposed to view. Unoccupied areas are defined as places that staff or the public will be in the room or area for only a few minutes, with the exception of service/maintenance personnel. This includes, but is not limited to:
      f. Mechanical rooms
      g. Electrical rooms
      h. Storage rooms
      i. Utility rooms
      j. Janitorial closets
      k. Other unoccupied rooms

l. Install conduits to an accessible ceiling space, as defined above.
    1) Consult with the Architect for further clarification.

2. Provide conduit, conduit sleeves, junction boxes, couplers, connectors, cabling and terminations as recommended by the manufacturer and as required by code.
3. Provide conduit sleeves through all spaces to accommodate all low voltage cabling. EZ path fire-rated and non-rated devices are approved substitutions for conduit sleeves.
4. Fill Requirements: Conduit, conduit sleeves, raceways, floor boxes, device boxes, mud rings, etc., shall be furnished and installed per the Division 26 requirements. Maintain all conduit code fill requirements, and provide no less than an additional 40% spare capacity for future growth.
5. Conduit and Raceway Usage: All communications cable shall be dedicated for communications purposes, and not to be shared with other electrical wiring when required by code. Obtain written approval from EACH of the manufacturers if more than one system type is going to be installed in a single conduit.
    a. Fire alarm cabling shall be in a separate, dedicated raceway (where indicated on the drawings).
6. Pull Cords: Provide nylon-type pull cords in EACH conduit raceway.
7. Provide surface-mounted raceway in the following areas (for retrofit/remodels or as directed by the drawings or Architect):
    a. Occupied areas exposed to view. Occupied rooms. Generally, occupied areas are defined as places that staff or the public will be in the room or area for more than a few minutes. This includes, but is not limited to:
        1) Administrative areas
        2) Office spaces
        3) Other occupied rooms
    b. Install conduits to an accessible ceiling space, as defined above.
    c. Size conduits as required.
    d. Consult with the Architect for further clarification.
8. Surface-mounted conduits of any kind may only be installed after every attempt has been made to conceal wiring and/or conduits specified within this document. Obtain prior approval from the Architect, before installing surface-mount conduit.
9. Prior to installation, contact the Architect if these instructions are not clear, or field conditions require further clarification of the intent of the installation.

O. Cable Lubricants: Lubrications specifically designed for installing cables may be used to reduce pulling tension as necessary when pulling cable into conduit. After installation, exposed cable and other surfaces must be cleaned of lubricant residue.
    1. Recommended Products:
    2. Dyna Blue
    3. American Polywater

P. Horizontal Cabling:
    1. Horizontal cable terminations shall be made at the appropriate patch panel and labeled as noted on the Outlet Schedule. At each outlet box, a sufficient length of spare cable shall be provided for terminating outlet devices such that the outlet can be easily removed and inspected. In addition, each cable shall be terminated as indicated below:
        a. Cables shall be dressed and terminated in accordance with the recommendations made in the TIA/EIA-568-C document, manufacturers' recommendations and/or best industry practices.

b. Bend radius of the cable in the termination area shall not be less than four (4) times the outside diameter of the cable.
c. The cable jacket shall be maintained as close as possible to the termination point.

Q. Systems Plywood Backboard Cabling:
1. Cable shall be routed as close as possible to the ceiling, floor, or corners to ensure that adequate backboard space is available for current and future equipment and for cable terminations. Cables shall NOT be tie wrapped to existing electrical conduit, existing cables, or other equipment. Minimum bend radius shall be observed.
2. Install cables via the shortest route directly to the nearest edge of the backboard from the mounted equipment or block. Lace, plastic or Velcro tie wrap all similarly routed cables together, and attach to the outside edge(s) of the backboard vertically and/or horizontally, then route via "square" corners over a path that will offer minimum obstruction to future installations of equipment and/or other cables.
3. See “Service Loops and Cable Management” listed within this specification for additional information.

3.4 SYSTEMS PLYWOOD BACK BOARDS

A. Systems plywood back boards shall be used to mount enclosures of any kind, to any wall or surface. The systems plywood back boards shall be securely fastened to the walls to accommodate no less than ten times the total weight of the equipment to be mounted. The systems plywood back boards shall be a minimum of 3/4", APA exterior-grade Douglas Fir A C, and fire retardant with a flame spread rating not more than 25 when tested according to ASTM E-84. Provide the systems plywood back boards from the floor up to ceiling height (not exceeding 12’-0”) on all walls shown, unless otherwise noted. The entire back board shall be painted with three (3) coats of fire-retardant paint (the color shall match the adjacent surface). EACH enclosure, when mounted, shall bear a minimum of 150 pounds weight on the enclosure.
B. Mounting of equipment shall be logically placed, and shall be located at the top, bottom, left, or right portion of the systems plywood back boards to accommodate future growth of the system. Under no circumstances will the equipment be allowed to be mounted in the middle of the back boards.

3.5 GROUNDING

A. Ground all equipment per the manufacturers’ recommendations, per Division 26 and as required by code.
B. Provide grounding and bonding per ANSI-STD-J-607-A, which includes, but is not limited to: cable trays, racks, conduit sleeves, and other equipment connected to the TMGB/TGB.
C. The minimum conductor size shall be # 6 green insulated copper grounding conductor. However, the size of each conductor shall be based on the actual cable length as defined in ANSI-STD-J-607-A. See Section 272000 “TMGB and TGB (Telecommunication Grounding Busbars)” for additional grounding requirements.

3.6 DEVICE RELOCATIONS

A. Device location may be changed prior to installation, within 15’-0” without extra charge, if so desired by the Architect.

3.7 INSTALLATION

A. Provide all equipment, wiring, conduit, and outlet boxes required for the installation of a complete, fully functioning, operating system in accordance with applicable local, state, national codes, AHJ requirements, the manufacturers’ recommendations, these plans and specifications. All circuits not in conduit must be wired with UL listed power limited cable under NEC 725, Class II wiring. Plenum cable shall be utilized in all return air plenum ceilings.
1. Color-coded wires shall be used throughout.

2. Wiring shall conform to the National Electrical Code Article 725.

B. Provide 120VAC wiring and connections to the control panels, EACH amplifier, CPU, DVR, and power supply as required for a fully functional system, while maintaining all of the design requirements described elsewhere within each system specifications. At a minimum, this shall include the following:
   1. Multiple power supplies and/or the control panel may be placed on the same circuit, while maintaining all code mandated load calculations, but shall be on circuits that are dedicated for EACH system.
      a. Consult with the Architect to verify load calculations meet all code requirements.
      b. Install 120VAC wiring and conduit as specified in Division 26.
      c. Show on the As-Built Drawings the location of each panel board that is being used to power any system equipment, and, at the panelboard, list each panelboard circuit for each system (e.g., panelboard “x”, circuit 12=FAPS-3; Circuit 14=IACP).

C. Maintain all fire wall ratings as required.

D. Installation of equipment and devices that pertain to other work in the contract shall be closely coordinated with the appropriate subcontractors.

E. EACH manufacturers’ authorized representative shall provide on-site supervision of the installation for EACH of the systems equipment for the duration of the project. This includes programming, training, and the Owner’s ability to use the Complete System Functionality as it was designed.

F. Install wire guards at locations as shown on the drawings and as described elsewhere within these specifications.

G. Every attempt shall be made to avoid running telecommunications close to (less than 2’-0") and/or parallel to other communication cables in the building, all lighting, and conduits containing 120VAC (or greater). This shall be to avoid interference with any other service or system, operation, or maintenance purposes such as access boxes, ventilation-mixing boxes, access hatches to air filters, switch or electrical outlets, electrical panels, fire alarm equipment, clock systems, and lighting fixtures. Avoid crossing areas horizontally just above or below any conduit and/or riser. Route cables in such a manner to allow other cables to enter the conduit and/or riser without difficulty at a later time by maintaining maximum distance from these openings. Maintain all recommended distances from other cables, as required by the manufacturer. Install cable to whichever of these two requirements are more stringent.

H. Room numbers shown on plans are architectural designs numbers for construction purposes. These numbers are NOT to be used for programming. Final system programming shall reflect the final room numbering plan and actual room signage, unless directed otherwise in writing or as specified in another specification section. Update the As-Built Drawings to reflect the final room numbering plan and actual room signage.

3.8 MOUNTING HEIGHTS, LOCATIONS, AND SETTINGS

A. Install all equipment as recommended by the manufacturer.

B. The installation of EACH device, enclosure, and/or control panel shall be installed so that the maintenance staff will be able to access, test and/or replace any component of the system. If this installation does not meet this requirement to the satisfaction of the Architect, it will not be accepted. The Installing Vendor/Contractor shall be required to remove the item, patch and paint the area to the satisfaction of the Architect, and reinstall the device, enclosure, or control panel as required to make the system easily maintainable and acceptable, at no additional cost to the Owner.

C. Control Panels, Power Supplies, and Locations:
   1. Mount control panels, power supplies, and enclosures (provide quantities as required) with approximately two (2) inches of separation between the enclosures.
   2. Each enclosure, when mounted, shall meet the following criteria:
      a. Conduit shall not enter any enclosure or panel, except where conduit entry is approved by the manufacturer.
      b. Chase nipple the enclosures together. At a minimum, use two (2) 1½" conduits. Size and/or provide additional conduits as required. Provide conduits between enclosures to accommodate an additional 100% conduit fill while maintaining all NEC requirements. Avoid installing chase nipples where batteries are to be installed (contact the manufacturer and/or the Installing Vendor/Contractor prior to drilling any holes). Any chase nipples installed where batteries are to be located will be rejected, and require the reinstallation as specified, up to and including installing new enclosures.
      c. The bottom of the chase nipples shall be a minimum of two (2) inches above the location where any batteries are to be installed.
      d. EACH enclosure door shall be able to open no less than 105°.
      e. The top of each enclosure shall be mounted at the same height of 60inches above the finished floor and shall be level.
      f. If changes to the above requirements are preferred, contact the Architect for approval prior to rough-in.

D. All equipment shall be attached to walls and ceiling/floor assemblies and shall be held firmly in place (i.e., devices shall not be supported solely by suspended ceilings). Fasteners and supports shall be able to support the no less than four (4) times the weight of the equipment and/or device.

E. Rack Equipment: EACH rack shall be securely attached to the floor and/or wall using the manufacturers' recommended mounting hardware.

F. See each system specification for additional mounting information.

3.9 FLUSH MOUNT AND SURFACE MOUNT EQUIPMENT AND ENCLOSURE LOCATIONS

A. Prior to rough-in, consult the Architect for clarification for flush mount and surface mount locations.

B. Flush mounted equipment and enclosures shall be installed in areas where the rooms are finished such as administrative areas, offices, work rooms, break room and corridors. Provide the appropriate finish work around each enclosure as required. This type of equipment includes, but is not limited to the following:
   1. Enclosures: Typically, are control panels, power supplies, etc.
      a. Provide the manufacturers' flush mount trim rings, adapters, and/or brackets for this type of equipment.

C. Surface mounted equipment and enclosure shall be installed in areas where the rooms are NOT finished such as electrical rooms, MDF/IDF rooms, mechanical rooms, or utility rooms. Unless otherwise noted, this equipment shall be installed on the systems plywood back boards. This type of equipment includes, but is not limited to the following:
   1. Enclosures: Typically, are control panels, power supplies, etc.
   2. Punch Blocks: Typically, are used with telephone PBX and intercom equipment.
   3. Wall-mounted and floor -mounted racks.

3.10 NUMBERING AND LABELING

A. Phenolic Plates:
   1. Install phenolic plates at each of the control panels, power supplies, terminal cabinets, and racks.
      a. All phenolic plates shall be secured to each enclosure with rivets.
      b. Install each plate 1” from the top of the enclosure, and be centered on the door. Relocate as required to avoid interfering with equipment or components within the enclosure or prevent the enclosure door from closing properly. The location of the phenolic plates shall be consistently installed in the same location on each system enclosure, at EACH location.

B. Terminal Cabinets:
   1. Label each termination point on the inside of EACH enclosure door. All information shall be legible, as defined by the Architect.

C. Addressable Devices/Address Point Labels (where applicable):
   1. Install the address label for each addressable device on or near the device. Verify with the Architect, prior to installation.
   2. Clean the surface from dust, grease, or lubricants as recommended by the manufacturer of the label.
   3. The addressable label shall be able to be viewed by the general public when standing on the ground.
      a. Prior to installation, coordinate with the Owner’s Representative for exact location of how and/or where to mount the address label for EACH device type to fulfill this requirement, prior to installation.
   4. Provide the following address label format:
      a. The background shall be clear (see through).
      b. The text shall be black in color, and a minimum of ½” tall.
      c. Use Brothers or P-Touch models to produce the label.

3.11 WIRING

A. For consistency of wiring throughout the entire system equipment, if specific conductor colors are not called out in EACH system specification, then the following colors shall apply:
   1. Red is (+) positive voltage or data bus (+) positive.
   2. Black is (-) negative voltage or data bus (-) negative.
   3. White is common.
   4. Green is normally open or normally closed.

B. Wiring within EACH enclosure shall have the outer jacket of the cable removed to within three (3) inches of the cable entering the enclosure. Individual conductors from each jacketed cable shall be spirally twisted to keep them together, until they are routed into each appropriate individual terminal. Route all conductors parallel with the walls of the enclosure, make 90° turns within the enclosure, and always keep a two (2) inch minimum spacing from any circuit board and/or terminals.

C. Labeling of Cables:
   1. Prior to installing any label, clean each cable with the appropriate cleaner to remove any pulling compound residue, grease, oil, dirt, etc., in order for the label to properly adhere to the cable jacket.
      a. The label shall indicate the device or outlet and the area or wing of the building that the cable is being routed from. The label shall also indicate the MDF room or designated IDF location that the cable is being routed to.

b. Each label shall be located on each cable that enters any enclosure or junction box, and shall be easily visible and readable.
c. The cable numbering system shall be consistent with shop drawings.

D. End-of-Line (EOL) Resistors: Each device that is capable of being supervised by the control panel and/or power supply shall be supervised. Install equipment and/or program as required.
1. Indicate on the As-Built Drawings where EACH of the End-Of-Line Resistors is located.
2. Each End-of-Line Resistor shall be installed at the last device on each circuit. Locating the EOL in the control panel and/or power supply is NOT acceptable.

E. The telephone dialer connections and Ethernet WAN connections shall be made by the Installing Vendor/Contractor. Coordinate with the Owner for scheduling the Owner's IT Department to supervise all terminations and connections.

F. All wiring routed under slab or underground shall be suitable for wet locations.

G. The Installing Vendor/Contractor shall clean all dirt and debris from the inside and the outside of EACH enclosure after completion of the installation, and prior to any testing being performed.

H. All circuits shall be identified in accordance with table below and all labels shall include wire type, quantity and circuit number. Wire code shall match approved shop drawings' wire code.

Table

Example: C2HX3
C = Signal circuit wire
2 = Signal circuit number
H = LCD Keypad wire
X = Addressable initiating device circuit wire
3 = Addressable initiating device circuit number

3.12 SPLICE CONNECTORS AND CONNECTIONS

A. All references to splices are for cables that are 50 volts or less.

B. A continuous cable run without any splices is the preferred method. When a splice is required, the following information shall apply.
1. Cable splices are only allowed in accessible, dry locations, in a junction box or terminal cabinet suitable for the purpose. The only exception is for field devices that have wire leads (e.g., pigtail) and require a connection of two (2) wires at the device.
2. Each cable end that is spliced must be labeled, as specified. (e.g., at the splice point, "From FACP in MDF Room XXX" on one cable, and "To the East Wing RCAP" on the other cable).

C. All splices shall be performed in one of the following methods:
1. Wire nuts shall NOT be used on this installation, will be deemed unacceptable, and shall be removed and installed as outlined below.
2. In Junction Boxes:
a. Either one of the following splice methods are acceptable:
1) Use the tool-less terminal strip, model number # SSU00470 (Black) or SSU00471 (White), and SSU00465 (the Back-Box Bracket) for use with extra deep 4S boxes. This equipment is manufactured by Space Age Electronics.

2) Use Model # DC-100-S Blue Dolphin Connectors (with Sealant), manufactured by Dolphin Components Corporation, on all splice connections that are size 18 gauge or less. The rubber coated outer jacket of the inch-long connector shall contain non-curing sealant that fills the crimp cavity when crimped. Strip the color-coded outer jacket of each individual conductor that is going to be crimped, approximately 1/8inch shorter than the length of the crimp connector, so that when the conductors are inserted all of the way in the connector, no bare wires (or any strands of wire) are exposed or visible out of the connector.

3. In Terminal Cabinets:
   a. In terminal cabinets with each conductor to be landed on a separate terminal.
   b. Indicate on the Shop Drawings and As-Builts, the locations of EACH terminal cabinet.
   c. Maintain the “Spare Capacity” requirements, as specified.
4. At Field Devices (where the device has wire leads and not a terminal strip).
   a. Use Model # DC-100-S Blue Dolphin Connectors as described above.
5. Spare or unused conductors shall be:
   a. Landed on terminal strips
   b. Shall have the Blue Dolphin Connectors crimped on the end of each conductor.
      1) Field devices with pigtails shall have a Blue Dolphin Connectors crimped on the end of any unused conductors.

D. All conductors, if spliced, shall be ONLY spliced to the same gauge size and color of conductor. Changing of gauge size or color at any point within any cable run is strictly prohibited, and all cables will be replaced at no additional cost to the Owner, and to the satisfaction of the Architect.
   1. If the field device has wire leads, then wire as necessary at the device for proper operation. Indicate the color code change on the shop drawings per point wiring diagrams. Update any and all changes to the drawings, for accurate As-Builts.

3.13 ON-SITE SYSTEM INFORMATION BINDER ENCLOSURE

A. The Installing Vendor/Contractor shall install the wall mount enclosure that is labeled “(Section Title here) information”. The enclosure shall be located in the administrative area or the MDF room. Verify the exact location with the Architect, prior to installation.
B. The enclosure shall have a site-specific manual, in a “D” style 3-ring binder with an 18-inch heavy-duty chain securely fastened to the inside of the enclosure.
C. See “As-Built Documentation” for more information.

3.14 TESTING & COMPLETE SYSTEM FUNCTIONALITY (SPECIFICALLY FOR THE FIRE ALARM SYSTEM ONLY)

A. The Installing Vendor/Contractor shall notify the Architect a minimum of five (5) business days in advance of testing.
B. The warranty shall NOT begin until the following conditions have been met:
   1. Fire Alarm System Testing:
      a. The Installing Vendor/Contractor shall provide two-way communication devices for their own staff, each Owner’s Representative, and the Architect, so that all parties can communicate as required to perform all tests.
      b. Completely fill out the 2007 Edition NFPA Fire Alarm System Record of Completion document.
      c. Obtain the AHJ signature, printed name, date, and telephone number on the Record of Completion.
      d. Obtain the AHJ signature, printed name, date, and telephone number on the Fire Alarm Permit.

e. If the Installing Vendor/Contractor fails the Fire Marshal Inspection, the following shall occur:
   1) The Installing Vendor/Contractor shall make all of the necessary corrections as required to pass the AHJ testing and inspection. Then, notify the AHJ and schedule another test, and continue making corrections until the Fire Alarm System has been accepted by the AHJ.
f. The Installing Vendor/Contractor is subject to the Close Out requirements as specified in Section 200000, Schedule of Values.

2. As-Builts:
   a. Refer to the “As-Built Documentation” of this specification for more information.
3. Training:
   a. Refer to Section 283176 for the Training Requirements as described in “Training Materials” when provided.
4. Complete System Functionality:
   a. After ALL of the above conditions have been met and the required signatures have been received, Complete System Functionality shall be deemed complete, as the Owner has the ability to use the system as it was designed.
5. Warranty:
   a. The warranty period shall now begin, and the initiating date of the warranty period shall commence on the date of the Owner’s ability to use the Complete System Functionality as it was designed. Refer to the “Warranty” section of this specification for more information.

C. Upon completion of the installation, testing, and instruction and training, the Installing Vendor/Contractor shall provide the following signed test forms, in the As-Built documentation as required.
   1. The signed original Record of Completion
   2. The signed original Fire Alarm Permit

3.15 TESTING & COMPLETE SYSTEM FUNCTIONALITY (FOR ALL SYSTEMS THAT IDENTIFY THIS TESTING REQUIREMENT)

A. The warranty shall NOT begin until the following conditions have been met:
   1. Obtain the AHJ signature, printed name, date, and telephone number on the permit(s) and other required documentation. Provide this documentation with the As-Built documents.
   2. The Installing Vendor/Contractor shall provide a copy of the (Section Number and Section Title here) - Operational Test Form that has been performed and submitted to the Architect for review. The purpose of this document is to show that the Installing Vendor/Contractor has in fact performed a complete test. In some cases, every device may not pass the test. This shall serve as the Installing Vendor’s/Contractor’s own punch list, to make corrections prior to the Acceptance Test. This must be completely filled out, and have an original signature of the representative of the Installing Vendor/Contractor. Allow for a minimum of ten (10) business days for the Architect to review this document.
   3. After the Architect’s review of the System Operational Test Form, the Architect will discuss the results of the test with the Installing Vendor/Contractor.
   4. The Installing Vendor/Contractor shall coordinate with the Architect to witness the Performance Test. Allow for a minimum of ten (10) business days to schedule this testing.

5. System Testing:
    a. The Installing Vendor/Contractor shall provide two-way communication devices for their own staff, each Owner's Representative, and the Architect, so that all parties can communicate as required to perform all tests.
    b. The Installing Vendor/Contractor shall demonstrate the testing of each device, to the Owner's Representative and the Architect, and document this information on the (Section Number and Section Title here) - Performance Test Form.
    c. Upon the completion and passing the Performance Test with 100% positive results, the Acceptance Test Form shall be signed by the Installing Vendor/Contractor, the Owner's Representative, and the Architect.
        1) If the Installing Vendor/Contractor fails this test by NOT passing the test with 100% positive results, the following shall occur:
            (a) The Installing Vendor/Contractor shall make all of the necessary corrections to provide 100% positive results.
            (b) The Installing Vendor/Contractor shall document the corrective action taken for each item that failed the Test, and submit to the Architect for review. Upon approval by the Architect, the Acceptance Test shall be rescheduled.
        2) The Installing Vendor is subject to the Close Out requirements as specified in Section 200000, Schedule of Values.
6. As-Builts:
    a. Refer to the "As-Built Documentation" of this specification for more information.
7. Training:
    a. Refer to EACH specific section for the training requirements as described in "Training Materials and Programming Survey".
8. Complete System Functionality:
    a. After ALL of the above conditions have been met, deemed by a "Pass" on the Governing Acceptance Form - (Section Name and Section Title here), and the required signatures have been received, Complete System Functionality shall be deemed complete, as the Owner has the ability to use the system as it was designed.
9. Warranty:
    a. The warranty period shall now begin, and the initiating date of the warranty period shall commence on the date of the Owner's ability to use the Complete System Functionality as it was intended. Refer to the "Warranty" section of this specification for more information.

3.16 WARRANTY

A. See "Testing & Complete System Functionality", listed elsewhere in these specifications, to establish the requirements and confirm when the actual warranty period shall begin.

B. The Installing Vendor/Contractor shall include in the pricing of their bid that they will honor and provide EACH of the manufacturers' full-term warranty period for the provision of replacement equipment for EACH individual device and/or component provided for this project. The completed and fully functional system, including wiring, installation, and all equipment shall be free from inherent mechanical and electrical defects. At a minimum, this shall be no less than one (1) year from the date of Complete System Functionality as defined in "Testing & Complete System Functionality" portion of this specification. Warranty service for the on-site replacement of equipment shall be provided by the system supplier's manufacturer trained representative during normal working hours, Monday through Friday, excluding holidays, and response for service shall be delivered no later than the following business day after the call was received.

C. When the manufacturers' warranty exceeds one year, the Installing Vendor/Contractor shall be responsible for replacing the actual component or device for the full duration of the manufacturers' warranty, if the Owner or their representative chooses to take the item to the Installing Vendor's/Contractor's place of business. If the Owner chooses to have the Installing Vendor/Contractor provide on-site service, then the Installing Vendor/Contractor is entitled to their standard published (or negotiated) labor rates and miscellaneous material items to replace the damaged warranty item.

D. The Installing Vendor/Contractor who is authorized to provide warranty service for this project is defined in "Quality Assurance" located in Part 1 of this specification.

3.17 AS BUILT DOCUMENTATION

A. The following documentation must be completed to the satisfaction of the Architect, in order to fulfill the Close Out requirements as specified in Section 260000, Schedule of Values.

B. All electronic and hard copy information submitted to the Owner shall immediately become the Owner's property to use as best determined by the Owner, without any compensation to any party.

C. All labeling shall match the final room number identification at completion of the project (not the room number that is indicated on the Bid Set of drawings).

D. Operation and Maintenance Manuals: The Installing Vendor/Contractor shall provide three (3) sets of detailed Operation and Maintenance Manuals in a "D" style 3-ring binder. The binder shall be sized to allow for 20% additional documentation. The spine of the binder shall have a clear cover with an insert clearly typed with the following label: "(Project Name, Section Number, and Section Title here) Operation and Maintenance Manual". The binder shall have a clear front cover with an insert clearly typed with the title of the spine on the binder, located at the top of the page, and centered. The following information shall also be included on the front sheet of the binder: Project Name and Project Number, Specification Section Number and Section Title, Owner's name, Site Name and Site Address, Installing Vendor's/Contractor's Name, Address, and Contact Name. These O&M Manuals shall include the following:

1. Use color-coded numbered tabs to separate each item defined below and for each device that was installed.
   a. Provide these items in the following order.
      1) Provide an 8½" x 11" clear heavy plastic sheet in front of a table of contents page as the first page of the binder indicating each of the equipment or device documents contained in each tab section.
      2) The System Software User Guide
      3) The Web Server "Web-based" Software User Guide
      4) The System Control Panel LCD Display User Guide
      5) The Remote LCD Display User Guide (where applicable):
         (a) Provide step-by-step instructions for typical basic operation of EACH system.
      6) Warranty information. The Installing Vendor/Contractor shall provide warranty information in the form of a matrix from left to right, that lists the following information:
         (a) Use the symbol on the legend of the contract drawings.
         (b) List the actual manufacturer's name of each device shown on the Installing Vendor's/Contractor's shop drawings.
         (c) List the actual manufacturer's model number of each device shown on the Installing Vendor's/Contractor's shop drawings.

(d) Provide the description of the device that is used for each symbol on the legend.
(e) On the matrix, indicate recommended testing frequency for each item.
(f) State the manufacturer's full term of the warranty for EACH control panel, EACH power supply, and EACH device provided.
(g) Indicate where the Owner may purchase each of these devices. Provide the Business Name, Address, City, State, Zip Code, Phone Number, and list two (2) contact names.

7) A reduced copy (11"x17") of record drawings. Enlarge all notes, text, and symbols to a legible (as defined by the Architect) reading format.
8) Provide one (1) original and two (2) copies of the "Spare Parts Proof of Delivery" form that was signed by the Owner's Representative.
9) A printed copy of the final completed version of the "(Section Number and Section Title here) Technical Configuration". This document shall be dated.
10) A printed copy of the final completed version of the "(Section Number and Section Title here) Software 'Point Status Report'" (where applicable). This document shall be dated.
11) Update the matrix as defined in the "System Device Naming Matrix" for each specification section, to correct any changes that may have occurred through the course of this project. This list shall follow the above equipment list.
12) The technical date sheet for each control panel, power supply, terminal cabinet, field device and component installed. Use a separate tab for each of these that were supplied and/or installed.
    (a) Include all testing documentation and the procedure to properly test each device. Put this document immediately behind the respective technical data sheet.
    (b) Include the installation manual for each device that was installed. Put this information immediately behind the testing documentation.
13) Provide one (1) original and two (2) copies of the AHJ approved documents.
14) Provide one (1) original and two (2) copies of the completed documents:
    (a) The (Section Number, and Section Title here) - Operational Test Form.
    (b) The (Section Number, and Section Title here) - Performance Test Form.
    (c) The approved Governing Acceptance Form - (Section Number, and Section Title here).
    (d) If the Governing Acceptance Form has not been approved, accepted, and signed by the Architect, this binder will be rejected.
15) Each binder shall not exceed three (3) inches in width. Use multiple binders as required. Indicate Volume 1 of X, Volume 2 or X, etc.
16) Provide the above information on six (6) CDs and label each one (with a PC-generated label) "(Owners Name, Project Name, Section Number, Section Title, and the current date goes here) - Operation and Maintenance Manuals, Data Sheets, Documents, and As-Built Shop Drawings". Organize the manuals, data sheets, documents, and drawings into separate folders.
    (a) Include on EACH system CD provided, the AutoCAD As-Built Drawings, located elsewhere in these specifications.
    (b) EACH of the three (3) Operation and Maintenance Manuals shall have one CD securely fastened inside.
    (c) Provide three (3) CDs for general As-Built documentation for the project.

E. On-Site System Information Binder: The Installing Vendor/Contractor shall provide an Individual Site Manual, in a "D" style 3-ring binder with an 18inch heavy-duty chain securely fastened to the inside of the "(Section Title here) information" enclosure. See the "On-Site System Information Binder Enclosure" listed elsewhere in these specifications, for the enclosure information and location. The binder shall be sized to allow for 20% additional documentation. The spine of the binder shall have a clear cover with an insert clearly typed with the following label: "(Section Title here) information". The binder shall have a clear front cover with an insert clearly typed with the title of the spine on the front sheet, located at the top of the page, and centered. The following information shall also be included on the front sheet of the binder; the Project Name and Project Number, Specification Section Number and Section Title, Owner's name, Site Name and Site Address, Installing Vendor's/Contractor's Name, Address, and Contact Name. Each binder shall include the following:
   1. Use color-coded numbered tabs to separate each item defined below and for each device that was installed.
      a. Provide these items in the following order:
         1) Provide an 8½" x 11" clear heavy plastic sheet in front of a Table of Contents page as the first page of the binder indicating each of the equipment or device documents contained in each tab section.
      b. The Installing Vendor/Contractor shall coordinate with the Owner to obtain the information listed below. A single sheet shall list the following items:
         1) The Site Name and Site Address.
         2) State "In case of emergency during regular business hours: (list the appropriate name and telephone number)". List the Owner's Representative who should be contacted during regular business hours.
         3) State "In case of emergency after regular business hours: (list the appropriate name and telephone number)". List the Owner's Representative who should be contacted after regular business hours.
         4) List the following information (where applicable): State "The monitoring of the (Section Title here) is being monitored by (list the name of the central monitoring station here), Phone Number: (list the central station phone number here), Account # (enter the account number here)".
      c. Provide each of the items identified in the Operation and Maintenance Manuals, with the following exceptions. Do NOT provide:
         1) Spare Parts Proof of Delivery Form.
         2) As-Built Operation and Maintenance CDs of the project.

F. As-Built Drawings: The Installing Vendor/Contractor shall provide three (3) sets of hard copy As-Built Drawings. Drawings shall be the same size that were issued for the shop drawings and clearly indicate the following:
   1. Update the Shop Drawings:
      a. To address any changes, including but not limited to the riser, point-to-point wiring diagrams, and mounting details.
      b. To accurately reflect the final installation of equipment and devices that were relocated, added or removed.
      c. Update the matrix as defined in the "System Device Naming Matrix" of the specification, to correct any changes that may have occurred through the course of this project.
      d. Actual routing of all raceways.
      e. Actual routing of all open cables.

f. Actual cable type, color, and numbers.
g. Actual splice locations.
h. Actual system wiring diagrams, connection diagrams, and interface of all components in the system.
i. Provide scale drawings of the internal components of the main panel, and each power supply. Show each circuit number coming from the terminals of each control panel and/or power supply.
j. Actual room number and programming addresses (where applicable) for all components in the system.
k. Show on the As-Built Drawings the location of each panel board that is being used to power any system equipment, and list each panel board circuit used (at the device that is connected to that circuit, e.g., FACP or FAPS).
l. Indicate on the As-Built Drawings where EACH of the End-Of-Line Resistors is located.
m. Provide all updated As-Built Drawings in AutoCAD 2013 format (or newer) and put these electronic files on the Operation and Maintenance Manuals CD, as described elsewhere in these specifications.

G. Provide all As-Built documentation to the Architect prior to any training and no less than ten (10) business days prior to project completion.
H. Any re-submittal(s) shall be provided at the Installing Vendor's/Contractor's expense.

****Sample****
WIRE LEGEND

CONDUIT/RACEWAY SINGLE CONDUCTOR								OPEN CABLE					
LETTER	**FUNCTION**	**CONDUCTOR COLOR**	**AWG**	**QTY**	**TYPE**	**CABLE MFR**	**CABLE MFR PART #**	**CONDUCTOR COLOR**	**AWG**	**QTY**	**TYPE**	**CABLE MFG**	**CABLE MFR PART #**
A	ADDRESSABLE INITIATING CIRCUIT	- BLACK	#16	1	THWN-SOLID				#16/2	1	16/2 – FPLP		
		+ RED	#16	1									
B	ADDRESSABLE INITIATING CIRCUIT LOOP	- BLACK	#16	2	THWN-SOLID				#16/2	2	16/2 – FPLP		
		+ RED	#16	2									
C	HORN/STROBE CIRCUIT	- BLUE	#14	1	THWN-SOLID				#14/2	1	FPLP		
		+ WHITE	#14	1									
D	HORN/STROBE CIRCUIT LOOP	- BLUE	#14	2	THWN-SOLID				#14/2	2	FPLP		
		+ WHITE	#14	2									
E	CONVENTIONAL INITIATING CIRCUIT	- BLACK	#16	1	THWN-SOLID				#16/2	1	16/2 – FPLP		
		+ YELLOW	#16	1									
F	CONVENTIONAL INITIATING CIRCUIT LOOP	- BLACK	#16	2	THWN-SOLID				#16/2	2	16/2 – FPLP		
		+ YELLOW	#16	2									
G	24V DC POWER CIRCUIT	- BLACK	#14	1	THWN-SOLID				#14/2	1	FPLP		
		+ RED	#14	1									
H	SPEAKER CIRCUIT	RED	#14/2	1	TWISTED SHIELDED FPLP W/ DRAIN				#14/2	1	TWISTED SHIELDED FPLP W/ DRAIN		
I	SPEAKER CIRCUIT LOOP	RED	#14/2	2	TWISTED SHIELDED FPLP W/ DRAIN				#14/2	2	TWISTED SHIELDED FPLP W/ DRAIN		

****Sample****
WIRE LEGEND

CONDUIT/RACEWAY SINGLE CONDUCTOR								OPEN CABLE					
LETTER	**FUNCTION**	**CONDUCTOR COLOR**	**AWG**	**QTY**	**TYPE**	**CABLE MFR**	**CABLE MFR PART #**	**CONDUCTOR COLOR**	**AWG**	**QTY**	**TYPE**	**CABLE MFG**	**CABLE MFR PART #**
J	ANNUNCIATOR CIRCUIT	BROWN BLUE	#16 #16	1 1	THWN-SOLID				#16/2	1	16/2 – FPLP		
		- BLACK	#14	1					#14/2	1	FPLP		
		+ RED	#14	1									
K	FIREMANS PHONE CIRCUIT	RED	#18/2	1	18/2 TWISTED SHIELDED FPLP W/ DRAIN				#18/2	1	18/2 TWISTED SHIELDED FPLP W/ DRAIN		
L	FIREMANS PHONE CIRCUIT LOOP	RED	#18/2	2	18/2 TWISTED SHIELDED FPLP W/ DRAIN				#18/2	2	18/2 TWISTED SHIELDED FPLP W/ DRAIN		
M	CONTROL CIRCUIT	- PURPLE	#14	1	THWN-SOLID				#14/2	1	FPLP		
		+ ORANGE	#14	1									
N	SPARE CONDUCTORS	- PURPLE	#14	2	THWN-SOLID				#14/4	2	FPLP		
		+ ORANGE	#14	2									
ADD PROJECT SPECIFIC NOTES HERE								**ADD PROJECT SPECIFIC NOTES HERE**					

END OF SECTION

SECTION 270528 - PATHWAYS FOR COMMUNICATIONS SYSTEMS

PART 1 GENERAL

1.1 RELATED DOCUMENTS

A. Drawings and general provisions of the Contract, including General Conditions, Supplementary Conditions and Divisions 0 and 1 Specification Sections, apply to work of this Section.

B. Specification Section 260000 Electrical General Conditions.

1.2 SCOPE

A. The installation shall include fire-rated and non-fire-rated penetration assemblies, conduit, and wire management.

B. The bonding of metallic raceways.

C. The work performed under this specification shall be of good quality and performed in a workmanlike manner. In this context "good quality" means the work shall meet industry technical standards and quality of appearance. The Owner reserves the right to reject all or a portion of the work performed, either on technical or aesthetic grounds. The Installing Vendor/Contractor shall make all corrections as needed, to the satisfaction of the Architect.

D. The system shall meet ALL of the requirements listed in Section 270000 Low Voltage Systems General Requirements PART 3 “Testing & Complete System Functionality”, prior to “Substantial Completion”.

E. Contractual information, guidelines, requirements, or other work specified to provide a fully functional system for Section 270528 includes, but is not limited to the sections identified in Section 270000.

1.3 RELATED DOCUMENTS

A. Drawings and General Provisions of the Contract, including General and Supplementary Conditions and Division 1 Specifications Sections, apply to work specified in this Section.

B. Applicable Standards: All work shall be performed in accordance with the latest revisions of the following standards:

1. NFPA 70 - National Electrical Code.
2. ANSI/TIA-568-C.0 - Generic Telecommunications Cabling for Customer Premises.
3. ANSI/TIA-569-B - Commercial Building Standard for Telecommunications Pathways and Spaces.
4. ANSI-J-STD-607-A - Commercial Building Grounding and Bonding Requirements for Telecommunications.

1.4 QUALITY ASSURANCE

A. Installing Contractor Qualifications:

1. Work in this section shall be performed by a licensed and bonded low voltage Installing Vendor/Contractor with a minimum of five (5) years’ experience in the installation and maintenance of high-speed data and voice networks. Only Installing Vendors/Contractors whose primary business is that of installing, maintaining, troubleshooting, and testing telecommunication infrastructures shall perform this work.
2. License Classification: Installing Vendor/Contractor must possess a valid Washington State 06 Electrical Low Voltage License.

1.5 GOVERNING CODES AND CONFLICTS

A. If the requirements of this section or the Project Drawings exceed those of the governing codes and regulations, then the requirements of this section and the Drawings shall govern. However, nothing in this section or the Drawings shall be construed to permit work not conforming to all governing codes and regulations.

1.6 PROJECT CONDITIONS ARCHITECTURAL PLANS

A. The Installing Vendor/Contractor shall carefully coordinate the various symbols utilized on the drawings and shall consult the architectural plans to determine ceiling and floor types in the various areas.

1.7 SUBMITTALS

A. Refer to Section 270000 Low Voltage Systems General Requirements for additional data sheet submittal requirements and the shop drawing submittal requirements.

PART 2 PRODUCTS

2.1 MATERIALS

A. See Section 270000 Low Voltage Systems General Requirements for additional requirements.

B. The Installing Vendor/Contractor shall review the Site Plans, Floor Plans, Riser Diagrams, and Detail Sheets for additional work that is required to be performed by the Installing Vendor/Contractor of this section.

2.2 COORDINATION

A. Refer to “Installation of Owner Furnished Equipment” for additional coordination and installation requirements.

B. Refer to “Submittals” listed elsewhere in this specification for additional coordination requirements.

2.3 ADDITIONAL REQUIREMENTS.

A. Refer to “As-Built Drawings” listed elsewhere in this specification for additional equipment required for this project.

2.4 SEISMIC BRACING

A. Provide Seismic Bracing as required by the Authority Having Jurisdiction (AHJ).

B. This includes, but is not limited to:

1. Racks
2. Cable supports

2.5 OPEN CABLING SUPPORT & HARDWARE

A. Each cable support shall be UL listed for the application and meet the TIA requirements for structured cabling systems.

B. Provide manufacturer approved mounting brackets and fasteners.

C. Do not exceed the cable support manufacturer’s cable fill capacity for each type provided for this project.

D. Do not exceed the cable manufacturer’s recommendations for cable suspension in open cabling environments.

E. J-Hooks shall have a galvanized finish.

1. Manufactured by Erico CADDY: Model # CAT32HP, or approved equal. Provide quantities as required.
2. Manufactured by Erico CADDY: Model # CAT48HP, or approved equal. Provide quantities as required.

F. Mounting Tree:

1. Manufactured by Erico CADDY: Model # CATHPTM, or approved equal. Provide quantities as required.

G. Adjustable Cable Support:

1. Manufactured by Erico CADDY: Model # CAT425 Series, or approved equal. Provide quantities as required.

H. Conduit Waterfalls:

1. Manufactured by Panduit: Model # CWF400, or approved equal. Provide quantities as required.

I. Conduit Bushings:
   1. Conduit bushings shall be used to protect communications cabling where conduits terminate in accessible ceiling space.
   2. Bushings shall be non-metallic to reduce cable abrasion.
   3. Manufactured by Arlington: Model # EMTXXX, or approved equal. Provide quantities as required.

2.6 FIRE RATED AND NON-FIRE RATED PENETRATIONS

A. Provide fire rated penetration equipment for EACH wall that is rated for fire-rated walls.
B. Provide industry standard penetration methods for EACH wall that is not a fire rated wall.
C. A firestop system shall be comprised of the item or items penetrating the fire rated structure; the opening in the structure and the materials and assembly of the materials used to seal the penetrated structure. Firestop systems comprise of an effective block for fire, heat, vapor, and pressurized water stream.
D. All penetrations through fire rated building structures (walls and floors) shall be sealed with an appropriate firestop system. This requirement applies to through penetrations (complete penetration) and membrane penetrations (through one side of a hollow fire rated structure). Any penetrating items (e.g., riser slots and sleeves, cables, conduit, and raceways, etc.) shall be properly firestopped.
E. Firestop systems shall be UL Classified to ASTM E814 (UL 1479).
F. Indicate on the Shop Drawings EACH location showing the proposed system location for approval, prior to installing the penetration system.
G. All firestop systems shall be installed in accordance with the manufacturer's recommendations and shall be completely installed and available for inspection by the local authorities prior to cabling system acceptance.
H. For EACH penetration, the following requirements shall apply:
   1. Provide pathway assemblies for EACH low voltage system cables for each individual assembly opening.
   2. Provide the quantity of pathway assemblies required for the horizontal cables, while maintaining all code requirements. Additionally, provide one (1) pathway assembly opening for EACH system listed on the Electrical Legend (This includes, but is not limited to: Fire Alarm System, Intrusion Alarm System, Intercom System, Access Control System, CCTV System, etc.), and no less than two (2) spare empty assembly openings, which shall remain empty at the completion of the project.
   3. Manufactured by Specified Technologies, Inc (STI): EZ Path Model # 33 Series and/or EZ Path Model # 44 Series for fire rated walls. Provide quantities as required for all rated installations.
      a. For EACH penetration, provide the stud wall attachment (for either series provided), filling the entire stud wall space with cable pathways for all cabling required and future cabling. Maintain all spare capacity requirements.
      b. For EACH EZ Path Model # 33 Series provided, provide one (1) pair of radius control modules.
      c. Manufactured by Specified Technologies, Inc (STI): EZ Path Model # RCM33.
I. Manufactured by Specified Technologies, Inc. (STI): EZ Path Model # NEZ33 Series. Provide quantities as required for all non-rated fire wall installations.

2.7 ADDITIONAL SYSTEM EQUIPMENT

A. See Part 3 of this specification for additional provision of system equipment and/or labor.

PART 3 EXECUTION

3.1 GENERAL

A. See Section 270000 Low Voltage Systems General Requirements for additional information.

B. Prior to rough-in, coordinate with the Architect for the exact installation location(s) and areas to avoid.

C. Install all equipment per the manufacturer's recommendation.

3.2 PRODUCT INSPECTIONS

A. The Installing Vendor/Contractor shall inspect all cable prior to installation to verify that it is identified properly on the reel identification label, that it is of proper gauge, containing correct number of pairs, and is the material ordered. Any physical damage to the cable and wire must be noted; un uniform jacket thickness and jacket tightness should also be identified. Note any buckling of the jacket, which would indicate possible problems.

3.3 HORIZONTAL PATHWAYS

A. It is the responsibility of the contractor to ensure that ALL PATHWAYS for the permanent link of each balanced twisted pair cable shall not exceed 295' in length from work area outlet to telecommunications room patch panel.

B. See Section 272000 for horizontal cabling types and additional requirements.

3.4 FIRE RATED AND NON-FIRE RATED PENTRATIONS

A. Install per manufacturer's recommendations.

B. Maintain all code and AHJ requirements.

3.5 EXPANSION JOINTS, SEISMIC JOINTS, AND BUILDING SEPARATIONS

A. All cabling crossing expansion joints, seismic joints, and building separations shall be installed inside flexible conduit connections and shall be fire rated per code and AHJ requirements.

3.6 PLENUMS

A. Provide metallic conduit through building plenum spaces for all cables which do not bear a CMP rated label.

3.7 WARRANTY

A. The warranty shall be direct to the end user, from the manufacturer, supported through the certified Installing Vendor/Contractor, and shall cover both materials and labor costs for any claims related to the warranty program. If the Installing Vendor/Contractor were to default, the manufacturer will assume responsibility of employing another certified installer to maintain the existing warranty. Bids from installers or Installing Vendors/Contractors who are not certified by the connecting hardware manufacturer and wire manufacturer at the time of project bid will be rejected.

3.8 OPERATION & MAINTENANCE MANUALS (O&M'S)

A. Provide all Operation & Maintenance Manual (O&Ms) documentation as defined in Section 270000 Low Voltage Systems General Requirements and listed elsewhere in this specification.

3.9 AS-BUILT DRAWINGS

A. Provide all As-Built documentation as defined in Section 270000 Low Voltage Systems General Requirements and listed elsewhere in this specification.

B. All labeling shall match the final room number identification at completion of the project (not the room number that is indicated on the Bid Set of drawings).

C. Update all documents provided in the Submittal and Shop Drawings to accurately reflect the actual equipment that was provided for this project, and the actual locations of the installed equipment.

D. The Installing Contractor shall provide As-Built Drawings to the Architect, which clearly indicate:
   1. The floor plan of the building showing the As-Built location of conduit runs, and terminal cabinets.
   2. Provide three (3) sets of complete As-Built Drawings.

3.10 DEMONSTRATION AND TRAINING

A. Upon completion of the system installation, the installation representative shall conduct a system test for the Owner, Owner's Representative, Architect, and Engineer.

B. Upon completion of the installation, after test and demonstration, the Installing Vendor/Contractor shall provide to the Architect a signed written statement substantiating the:
   1. "System has been completely tested, demonstrated to the Owner's Representative, and accepted by the appropriate authority."

END OF SECTION

SECTION 272000 - DATA AND VOICE INFRASTRUCTURE

PART 1 GENERAL

1.1 RELATED DOCUMENTS

A. Drawings and general provisions of the Contract, including General Conditions, Supplementary Conditions and Divisions 0 and 1 Specification Sections, apply to work of this Section.

B. Contractual information, guidelines, requirements, or other work specified to provide a fully functional system for Section 272000 includes, but is not limited to the sections identified in Section 270000.

C. Specification Section 260000 Electrical General Conditions.

1.2 SCOPE

A. The Installing Contractor shall furnish and install all materials for a complete and fully function expansion of an existing data and voice Telecommunications Infrastructure system in accordance with this specification and the contract drawings. The system shall be in full compliance with a “Limited Lifetime Warranty”. The Installing Contractor shall be responsible for providing a complete, functional system including all necessary components, whether included in this specification or not.

B. The installation shall include Copper Category Rated Cables, interconnect equipment, connectors, jumpers punch blocks, copper patch panels, patch cables, telecommunication outlets, and wire management.

C. The Installing Contractor is required to coordinate with the Owner so that the telephone system can be patched into the Data and Voice infrastructure by the Installing Contractor.

D. All copper Horizontal Cables shall be terminated on patch panels in the Telecommunication Rooms (MDF location) and on Telecommunications Outlets. All copper POTS/analog phone cables shall be terminated on punch blocks at main cross connects and on patch panels at the horizontal cross connect end, unless noted otherwise.

E. Expand and modify the existing Paging or Alert System Horizontal data cables in remodel areas. New cables are to be terminated on wall-mounted patch panels of the same data speed transfer rating near Paging or alert system head end. See plans for scope of work.

F. Expand and modify the existing Cable TV / CATV cable system in remodel areas. See plans for scope of work.

G. Upon completion of installation, the Installing Contractor shall test all copper cables. All cables shall be tested as defined elsewhere within this specification.

H. The work performed under this specification shall be of good quality and performed in a workmanlike manner. In this context "good quality" means the work shall meet industry technical standards and quality of appearance. The owner reserves the right to reject all or a portion of the work performed, either on technical or aesthetic grounds.

I. The system shall meet ALL of the requirements listed in Section 270000 Low Voltage Systems General Requirements PART 3 “Testing & Complete System Functionality”, prior to “Substantial Completion”.

J. Contractual information, guidelines, requirements, or other work specified to provide a fully functional system for Section 272000 includes, but is not limited to the sections identified in Section 270000.

K. See “Horizontal Cable” located in this specification for additional work and equipment. This includes, but is not limited to; CAT6 Cabling for ALL Local Area Network (LAN) based Systems as shown on the plans, detail sheets, and riser diagrams.

1.3 RELATED DOCUMENTS

A. Drawings and General Provisions of the Contract, including General and Supplementary Conditions and Division 1 Specifications Sections, apply to work specified in this Section.

B. Applicable Standards: All work shall be performed in accordance with the latest revisions of the following standards:

1. BICSI Information Technology Systems Installation Methods Manual, 6th Edition
2. BICSI Telecommunications Distribution Methods Manual, 13th Edition
3. ANSI/TIA 606-A (2002) Administration Standard for Commercial Telecommunications Infrastructure.
4. ANSI/TIA 607-B Commercial Building Grounding and Bonding Requirements for Telecommunications.
5. ANSI/TIA 568-C.0. "Generic Telecommunications Cabling for Customer Premises."
6. ANSI/TIA 568-C.1. "Commercial Building Telecommunications Cabling Standard - Part 1: General Requirements."
7. ANSI/TIA 568-C.2. “Commercial Building Telecommunications Cabling Standard - Part 2: Balanced Twisted Pair Cabling Components."
8. EIA/TIA 569-B. "Commercial Building Standard for Telecommunications Pathways and Spaces."
9. IEEE 802.3 (latest edition) "Carrier Sense Multiple Access with Collision Detection.”
10. International Building Code (latest edition).
11. International Fire Code (latest edition).
12. NEC (National Electrical Code) (latest edition).
13. Telecommunications Architectural Standards - In Washington State Government (latest edition).

1.4 QUALITY ASSURANCE

A. Installing Contractor Qualifications:

1. The Installing Contractor project manager shall hold a valid and current Registered Communications Distribution Designer (RCDD) certification issued by Building Industry Consulting Service International (BICSI). The project manager shall have a minimum of five years’ experience with projects of similar size and scope.
2. The Installing Contractor field staff installers shall hold valid and current Installation certifications issued by Building Industry Consulting Service International (BICSI) or hold documented certification of training from the manufacturer of the cabling and equipment that is being installed. The field staff shall have a minimum of five years’ experience with projects of similar size and scope.
3. The Installing Contractor shall be an Authorized Premier Network Installer Certification Only Partner of the Manufacturer of the equipment being installed and shall furnish documentation showing that the Installing Contractor is trained and certified. The Installing Contractor shall be capable of providing the Owner with a documented Limited Lifetime Performance Warranty of the equipment being installed at the time of project bid, to be approved for bidding.
4. Work in this section shall be performed by a licensed and bonded low voltage Installing Contractor with a minimum of five years’ experience in the installation and maintenance of high-speed data and voice networks. Only Installing Contractors whose primary business is that of installing, maintaining, troubleshooting, and testing Telecommunication Infrastructures shall perform this work.

5. In order to qualify for installation of the Telecommunications Infrastructure Installing Contractor must possess the required license classification, a performance history, experience in the installation and termination of copper systems, and proof of time in business.
6. License Classification: Installing Contractor must possess a valid Washington State 06 Electrical Low Voltage License.

1.5 GOVERNING CODES AND CONFLICTS

A. If the requirements of this section or the Project Drawings exceed those of the governing codes and regulations, then the requirements of this section and the Drawings shall govern. However, nothing in this section or the Drawings shall be construed to permit work not conforming to all governing codes and regulations.

1.6 PROJECT CONDITIONS - ARCHITECTURAL PLANS

A. The Installing Contractor shall carefully coordinate the various symbols utilized on the drawings and shall consult the architectural plans to determine ceiling and floor types in the various areas.

1.7 SUBMITTALS

A. Refer to Section 270000 Low Voltage Systems General Requirements, for additional data sheet submittal requirements and the shop drawing submittal requirements.

PART 2 PRODUCTS

2.1 MATERIALS

A. See Section 270000 Low Voltage Systems General Requirements for additional requirements.
B. The Installing Contractor shall review the Site Plans, Floor Plans, Riser Diagrams, and Detail Sheets for additional work that is required to be performed by the Installing Contractor of this section.
C. Leviton / Berk-Tek manufactures the products that are used for the basis of design of this specification.
   1. Equivalent manufacture's solutions may be submitted for prior approval no less than 2 weeks before bid date closing. Products not submitted for prior approval shall be rejected.
      a. Include with substitution request, a 3rd party verified testing agency's report which shall include, but not be limited to, the following TIA-568-C.2 tests:
         1) Insertion Loss / Attenuation.
         2) NEXT (Near End Cross Talk).
         3) PSNEXT (Power Sum Near End Cross Talk).
         4) ACR (Attenuation Crosstalk Ratio).
         5) PSACR (Power Sum Attenuation Crosstalk Ratio).
         6) ACR-F (Attenuation Crosstalk Ratio – Far End)
         7) PSACR-F (Power Sum Attenuation Crosstalk Ratio – Far End)
         8) The following tests are only required for CAT6A cabling:
            (a) PSANEXT (Power Sum Alien NEXT)
            (b) PSAACRF (Power Sum Alien ACRF)
D. All products shall be new, and brought to the job site in original manufacturer's packaging. Electrical components shall bear the Underwriter's Laboratories label. All Telecommunications cable shall bear the manufacturer's label in accordance with NEC 800 based on flammability testing as follows:
   1. CMR General Purpose Communications Riser Cable.
   2. CMP Plenum-rated Communications Cable.
   3. And other cable ratings to comply with the National Electrical Code requirements for the installation.

E. All products shall meet the certification requirements of the warranty. All device products and all cabling products shall be of a single manufacturer.
F. Provide all equipment as defined in the specification(s) and shown on the drawings.
G. Refer to PART 1 for any equipment that is not specifically defined.

2.2 MATERIALS NOT INCLUDED (PROVIDED & INSTALLED BY OTHERS)
A. Telephone switching equipment and related appurtenances.
B. Telephones.
C. Switchers, routers, network hubs, data concentrators and other similar active electronic equipment for data communications.
D. Computers, printers, facsimile machines, modems and other similar utilization equipment.

2.3 COORDINATION
A. Refer to “Installation of Owner Furnished Equipment” for additional coordination and installation requirements.
B. Refer to “Submittals” for additional coordination requirements.

2.4 INSTALLATION OF WIRELESS ACCESS POINTS
A. The Installing Contractor shall install the following Owner Furnished equipment:
1. Wireless Access Points (WAP’s). Coordinate with the Owner as required.
2. Install each WAP where indicated on the plans.

2.5 ADDITIONAL REQUIREMENTS
A. Refer to “As-Built Drawings” listed elsewhere in this specification for additional equipment required for this project.

2.6 SEISMIC BRACING
A. Provide Seismic Bracing as required by the AHJ.
B. This includes, but is not limited to:
1. Racks
2. Cable Supports.

2.7 TELECOMMUNICATIONS SYSTEM DESCRIPTION
A. Provide Horizontal Cabling from each Telecommunication port to the nearest MDF or designated IDF location. Each Telecommunication Outlet type and style shall contain the quantity of Horizontal Cables identified on the Legend, unless noted otherwise.
B. Horizontal cables are to be terminated on patch panels of the same data speed transfer rating.
C. Modems, fax machines, wall mount voice outlets for telephone handsets, etc. shall be connected to the data and voice infrastructure via Horizontal Cabling.
D. Paging or Alert System Horizontal data cables are to be terminated on wall-mounted patch panels of the same data speed transfer rating near Paging or alert system head end.

2.8 LABELING
A. See Section 27 0000 for additional label type and additional requirements.
B. The alpha-numeric labeling shall be developed by the Installing Contractor, under the direction of the Owners IT Department at the Pre-Installation project kick-off meeting.
C. The Installing Contractor shall label all equipment and cables in an identical fashion of a sequential manner to the satisfaction of the Owner.
D. All label printing shall be machine generated using indelible ink ribbons or cartridges, and self-laminating labels shall be used on cable jackets appropriately sized to the outside diameter of the cable.
E. All labeling shall match the final room number identification at completion of the project (not the room number that is indicated on the Bid Set of drawings). This includes, but is not limited to; the Outlets, Port Addresses, Patch Panels, As-Built Drawings, and Test Results.
F. Patch panels shall have each port labeled to identify each outlet port.

G. Cable Identification Labels shall be places in the following locations:
   1. Horizontal Cables. Each cable shall be identified and marked with the outlet port identification near the cable termination point at the rear of the patch panel and placed within view.
H. Where telecommunications outlets are located above accessible ceiling space, provide a label directly on the ceiling tile grid indicating “TELECOM OUTLET ABOVE”.

2.9 TELECOMMUNICATION OUTLETS

A. Review the Site Plan(s), Floor Plan(s), Riser Diagram(s), and Detail Sheet(s) for all cable types and quantities required for this project.
B. Each Telecommunication Outlet type and style shall contain the quantity of Horizontal Cables identified on the Electrical Legend, unless otherwise noted.
C. Provide Horizontal Cabling from EACH Telecommunication Outlet port to the nearest MDF or designated IDF location.
D. Telecommunication Outlet:
   1. Each Outlet shall accommodate individual modular ports and each modular port shall be individually removed without affecting any other port within the outlet.
   2. Coordinate the labeling requirements with the Owner’s IT department.
      a. Outlet label identification information shall be typed text and indicate patch panel and port for each jack and shall comply with the Owners Labeling Standards. Hand written information will not be acceptable.
      b. The Installing Contractor shall match the color and finish of the devices specified in Section 26 2726. Modify the model number if a different color or finish is identified in Section 26 2726.
      c. 1-Port Stainless Steel Telecommunication Outlets, where shown on the plans, shall be manufactured by Leviton: Model # 43080-1L1, or approved equal. Provide quantities as required.
      d. 2-Port Stainless Steel Telecommunication Outlets, where shown on the plans, shall be manufactured by Leviton: Model # 43080-1L2, or approved equal. Provide quantities as required.
      e. 4-Port Stainless Steel Telecommunication Outlets, where shown on the plans, shall be manufactured by Leviton: Model # 43080-1L4, or approved equal. Provide quantities as required.
      f. 6-Port Stainless Steel Telecommunication Outlets, where shown on the plans, shall be manufactured by Leviton: Model # 43080-1L6, or approved equal. Provide quantities as required.
   3. Surface Mount Outlet Locations shall only be installed above accessible ceiling spaces, the MDF Room, and designated IDF locations. They are not to be installed below the ceiling surface or exposed to view, unless approved in writing by the Engineer.
      a. Provide modular single-port or dual port Surface Mount Outlet where indicated on the Plans. This includes, but is not limited to:
         1) Wireless Access Points.
         2) Projector Mounts.
         3) CCTV Cameras.
         4) Intrusion Alarm Control Panel.
         5) Access Control Panel.
         6) Energy Management Panels.

b. 1-Port Surface Mount Telecommunication Outlet, where shown on the plans, shall be manufactured by Leviton: Model # 41089-1IP, or approved equal. Provide quantities as required.
c. 2-Port Surface Mount Telecommunication Outlet, where shown on the plans, shall be manufactured by Leviton: Model # 41089-2IP, or approved equal. Provide quantities as required.

E. Modular Inserts:
1. 8-position, 8-conductor (8P8C). Individual workstation port and patch panel port modules shall be Category 6 rated, 8-position, 8-conductor (8P8C) for termination of conductors and shall be approved by the manufacturer.
2. 8-position, 8-conductor (8P8C). Individual Wireless Access port and patch panel port modules shall be Category 6A rated, 8-position, 8-conductor (8P8C) for termination of conductors and shall be approved by the manufacturer.
3. EACH workstation port shall be Category 6 rated.
4. Each Wireless Access port shall be Category 6A rated.
5. Cables shall be wired in accordance with TIA/EIA-T568B, unless noted otherwise.
6. Each individual insert shall be fully compatible with the Face Plates provided.
a. The Installing Contractor shall match the color and finish of the devices specified in Section 262726 for the workstation modules. Modify the model number if a different color or finish is identified in Section 262726. The Installing Contractor shall match the color of the horizontal cabling as called out in this specification for the patch panel modules.
b. Manufactured by Leviton: Model # 61110-R(X)6 Series for Category 6 applications, or approved equal for all workstation outlets. Provide quantities as required. (X) Indicates color.
c. Manufactured by Leviton: Model # 6110G-R(X)6 Series for Category 6A applications, or approved equal for all Wireless Access point outlets. Provide quantities as required. (X) Indicates color.
7. Blank inserts: Fill all remaining unused ports with a blank filler insert that is approved by the manufacturer.
a. The Installing Contractor shall match the color and finish of the devices specified in Section 262726. Modify the model number if a different color or finish is identified in Section 262726.
8. Manufactured by Leviton: Model # 41084BGB, or approved equal. Provide quantities as required.

F. Wall Mount Telephone Outlet:
1. Provide modular single-port stainless steel wall phone outlet with mounting studs.
2. Manufactured by Leviton: Model # 4108W-1SP, or approved equal. Provide quantities as required.

2.10 HORIZONTAL CABLE – INSIDE PLANT (ISP)

A. See “Testing of Cables” listed elsewhere within this specification for Testing Requirements to be documented and submitted at the completion of this project.
B. EACH Cable installed shall be rated for the appropriate application, such as; Riser Rated, Plenum Rated, Wet Rated, etc.
C. Provide Horizontal Cabling from each Telecommunication Outlet to the nearest MDF or the nearest designated IDF location.

D. Analog Plain Old Telephone Service (POTS) lines shall be provided for, but not limited to, the following items. These items shall be installed complete without splices between the jack and cable termination point.
   1. Fire Alarm System.
   2. Intrusion Alarm System.
   3. Elevator (where applicable).
   4. Terminate all telephone jacks as described elsewhere in these specifications.
E. Cable color codes shall be as follows.
F. All horizontal data cable shall be blue in color.
   1. All voice cable shall be white in color.
   2. All CCTV and IP Access Control cable shall be yellow in color.
   3. All IP intercom clock shall be gray in color.
   4. All Wireless Access Point cable shall be green in color.
G. The work station Telecommunication Horizontal Cable shall be Category 6 rated, 4-pair, 23 AWG UTP, unless noted otherwise.
   1. Manufactured by Berk-Tek: Model # LANmark 1000 Series plenum rated cable for Category 6 applications, or approved equal.
H. The Wireless Access Point Cable shall be Category 6A rated, 4pair, 23 AWG UTP, unless noted otherwise
   1. Manufactured by Berk-Tek: Model # LANmark-10G2 Series plenum rated cable for Category 6A applications, or approved equal.

2.11 HORIZONTAL CABLE – OUTSIDE PLANT (OSP) & WET RATED LOCATIONS

A. See “Testing of Cables” listed elsewhere within this specification for Testing Requirements to be documented and submitted at the completion of this project.
B. Outside Plant (OSP) cables shall be used where conduits are routed below grade. Such as; slab on grade floor boxes, underground conduits to another building, where required by code, etc. All Outside Plant (OSP) cable extending within the building at a distance greater than 49 feet shall be run in conduit.
C. Provide Horizontal Cabling from each Telecommunication port to the nearest MDF or the nearest designated IDF location.
D. The Telecommunication Horizontal Cable shall be Category 6 rated, 4-pair, 23 AWG UTP, unless noted otherwise.
   1. Manufactured by Berk-Tek: Model # LANmark-6 OSP Series, or approved equal.

2.12 PATCH PANELS – COPPER

A. All patch panels shall be located at the MDF and each designated IDF location. They shall be rack or wall mounted unless specifically otherwise noted.
B. Provide a minimum of 25 % spare patch panel jack capacity.
C. Patch panels should be fully populated, avoiding blanks and empty ports (with the exception being the last patch panel in the series which may not be fully populated).
D. All Category patch panels shall be tested and approved for Category wiring as specified to cable type, per TIA/EIA-568C; shall have rear cable management bar and front labeling.
E. Provide separate Patch Panels for the following equipment connection types:
   1. Data Cables.
   2. Wireless Access Points.
   3. Analog Voice Cables.
F. Patch Panels:
   1. The panel shall be provided to match the existing installation conditions for expansion.

2. Wall mounted manufactured by Leviton: Model # 69586-U89, or approved equal for 12 port applications.
3. Rack mounted manufactured by Leviton: Model # 4S255-S24, or approved equal for 24 port applications.

2.13 PATCH CABLES - COPPER

A. The Patch Cables shall be Category 6 rated, 4-pair, 23 AWG UTP for all Category 6 systems and Category 6A rated, 4-pair, 23 AWG UTP for all Category 6A systems, unless noted otherwise. Provide one (1) Patch Cable per telecommunications outlet jack and one (1) Patch Cable per telecommunications patch panel port as described below.
B. The outer cable jacket shall match the color selection of the Horizontal Cable Color identified in “Horizontal Cable”.
C. Provide a minimum quantity of one (1) 15’ equipment cord for EACH telecommunication workstation outlet box shown in work areas. (Leviton # 62460-15L), or approved equal. See table below for MDF/IDF patch cord quantities.
D. Provide a minimum quantity of one (1) 3’ equipment cord for EACH telecommunication jack at Each Wireless Access Point. (Leviton # 6210G-3(X), or approve equal. (X) Indicates color of equipment cord according to Horizontal Cable Color identified in “Horizontal Cable”.
E. Provide a minimum quantity of one (1) 3’ equipment cord for EACH telecommunications jack at systems related equipment such as CCTV, IP intercom clock, IP access control system. (Leviton # 62462-03(X), or approved equal. (X) Indicates color of equipment cord according to Horizontal Cable Color identified in “Horizontal Cable”.
F. Upon completion of the project, the Data and Voice Infrastructure Installing Contractor shall deliver the following patch cables:

The following items shall apply ONLY to the MDF Room and designated IDF locations.					
Item #	**Cable Length**	**Color to be determined by horizontal System cabling.**	**Quantity of Patch Cables** (Provide the following percentage of patch cables based on the Total patch panel Ports provided for this project) Unless noted otherwise.		
				manufactured by	**Model #** X indicates color of patch cable
1	3’		20%	Leviton	(CAT6) 62460-03(X)
2	7’		60%	Leviton	(CAT6) 62460-07(X)
3	9’		20%	Leviton	(CAT6) 62460-09(X)
4	3’		100%	Leviton	(CAT6A) 6210G-3(X)

2.14 TERMINATION HARDWARE (PUNCH BLOCKS) – COPPER CABLES

A. Telecommunication POTS / Analog Phone cabling shall be terminated in the MDF and each designated IDF location on wall mounted 110 blocks, unless noted otherwise.
B. Manufactured by Leviton: Model # 41AW2-100, or approved equal. Provide quantities as required.

2.15 WIRE RINGS

A. Cables on backboards shall be supported using open distribution rings. Rings shall be located within 12” of entering or exiting conduit, 6” prior to any radius bends and at least 12” on center. The rings shall have rounded edges and be designed in a “C” configuration. Securely mount distribution rings to the plywood backboard.

B. Chatsworth Products Inc. (CPI): Model # 12035-001, or approved equal. Provide quantities as required.

2.16 CABLE MANAGEMENT TIES

A. Wire ties of any type shall NOT be used anywhere in this installation.

B. Bundle all Horizontal Cables together with Velcro-type tie wraps.

1. Adjustable Velcro Straps shall be used for all cable bundles.
   a. Provide Velcro Straps every two-feet (approximately) above accessible ceilings, in Cable Trays (where applicable) and throughout the cable run.
   b. Provide Velcro Straps every twelve-inches (approximately) within the MDF and each designated IDF location.
2. Chatsworth Products Inc. (CPI): Model # 020XX-201, or approved equal. XX indicates actual length. “06” (6-inches long for two-inch diameter cable bundles), “09” (9-inches long for three-inch diameter cable bundles), and “12” (12-inches long for four-inch diameter cable bundles). Provide quantities as required.

2.17 SPARE DEVICES

A. Provide the following spare devices:

Device	Quantity
Telecommunication outlet (with work station cable)	2
Telecommunication outlet (with Wireless Access Point cable)	1

B. Each spare device shall include 295’ of terminated cable, faceplates, modular ports, jacks, surface mount outlets, conduit (up to 100’) and labor as listed elsewhere in this specification; all as required for a complete installation. Location of these devices to be determined by the Owner’s representative. Unused devices shall be turned over to the Owner.

2.18 ADDITIONAL SYSTEM EQUIPMENT

A. See Part 3 of this specification for additional provision of system Equipment and/or Labor.

B. See 270528 for pathway requirements (cable tray, inner duct, etc.).

PART 3 EXECUTION

3.1 GENERAL

A. See Section 270000 Low Voltage Systems General Requirements for additional information.

B. Prior to rough-in, coordinate with the Architect for the exact location(s).

C. Install all cabling, devices, and/or equipment per the manufacturer’s recommendation.

3.2 PRODUCT INSPECTIONS

A. The Installing Contractor shall inspect all cable prior to installation to verify that it is identified properly on the reel identification label, that it is of proper gauge, containing correct number of pairs, and is the material ordered. Any physical damage to the cable and wire must be noted; un-uniform jacket thickness and jacket tightness should also be identified. Note any buckling of the jacket, which would indicate possible problems.

3.3 CABLE INSTALLATION - GENERAL

A. EACH CABLE RUN SHALL BE CONTINUOUS, WITHOUT ANY SPLICES, from the Telecommunications Outlet to the patch panel(s). Any cable run that does not meet this requirement shall be replaced at no additional cost to the Owner.

B. The Installing Contractor shall insure that EACH Telecommunications cable is installed with care, using techniques which prevent kinking, sharp bends, scraping cutting, deforming the jacket, or other damage. During inspection evidence of such damage will result in the material being declared unacceptable. The Installing Contractor shall replace unacceptable cabling at no additional cost to the Owner.

C. Conduit and Raceway Usage: All Telecommunications cable shall be installed in grounded metal conduit or raceway dedicated for Telecommunications purposes, when called for on the Project Drawings, and not to be shared with electrical wiring.

D. Cable shall not be draped on, tied or otherwise secured to electrical conduit, plumbing, ventilation ductwork or any other equipment. Cable shall be secured to building supports or hangers or to additional blocks or anchors specifically installed for this purpose.

E. All wiring to be installed in a neat and inconspicuous manner and per local code requirements. Route wires parallel or perpendicular to the building structure using the specified cable supports. Wiring shall be installed near or on structural members as to minimize risk of physical damage by other trades or maintenance personnel servicing the equipment.

F. Cable Lubricants specifically designed for installing Telecommunications cable may be used to reduce pulling tension as necessary when pulling cable into conduit. After installation, exposed cable and other surfaces must be cleaned of lubricant residue.

G. Backboard and Rack Cable Supports: Clamps, "D-Rings", Velcro and tie-wraps are all acceptable ways to support cable. However, installation of these supports must be done with care so as not to cause crushing or distortion of the cable, nor cause tighter bends than the minimum radius permitted for each type cable.

3.4 HORIZONTAL CABLING

A. Horizontal Cables shall be dressed and terminated in accordance with TIA/EIA-568-B requirements and the cable manufacturer's recommendations.
   1. Untwisting of pairs at the termination point shall not exceed one-half an inch for Category 6 connecting hardware.
   2. Bend radius of the cable in the termination area shall not be less than the manufacturer's recommendation.
   3. The Horizontal Cable jacket shall be maintained as close as possible to the termination point.

B. Every attempt shall be made to avoid running Horizontal Cables close to (less than 24") and parallel to power raceway and wiring, or close to light fixtures.

C. When an approved cable support is used to support cable bundles, all horizontal cables shall be supported at a maximum of four-foot intervals with UL approved cable support. At no point shall cables rest on acoustic ceiling grids or panels. Cables shall not be attached to ceiling grid or lighting support wires. Where light support for drop cable legs is required, the Installing Contractor shall install clips to support the cabling.

D. The installation of Horizontal Cables around moveable devices, instruments, subpanels, etc. shall be provided with adequate support, length, protection, and flexibility so that the cable is not damaged in the event the equipment is moved.

E. Pathways:
   1. It is the responsibility of the contractor to ensure that ALL PATHWAYS for the permanent link of each balanced twisted pair cable shall not exceed 295' in length from work area outlet to telecommunications room patch panel.
   2. To ensure this length, all pathways shall be coordinated and installed prior to pouring of any slabs or the installation of any permanent structure which would inhibit a conduit or cable tray run from being installed after the structure is complete.

3. See section 270528 for pathway types and additional requirements.

3.5 PLYWOOD BACKBOARD CABLING

A. Horizontal Cable installation must conform to the Project Drawings. All cabling shall be routed so as to avoid interference with any other service or system, operation, or maintenance purposes such as access boxes, ventilation mixing boxes, access hatches to air filters, switch or electrical outlets, electrical panels, fire alarm equipment, clock systems, and lighting fixtures. Avoid crossing areas horizontally just above or below any riser conduit. Lay and dress cables to allow other cables to enter the conduit/riser without difficulty at a later time by maintaining maximum distance from these openings.

B. Horizontal Cables shall be routed as close as possible to the ceiling, floor, or corners to ensure that adequate backboard space is available for current and future equipment and for cable terminations. Horizontal Cables shall not be connected or attached to electrical conduit or other equipment. Minimum bend radius shall be observed.

C. Lay cables via the shortest route directly to the nearest edge of the backboard from the mounted equipment or block. Velcro wrap all similar cables together and attached by means of clamps screwed to the outside edge(s) of the backboard vertically and/or horizontally, then route via "square" corners over a path that will offer minimum obstruction to future installations of equipment or other cables.

D. Horizontal Cables that are not dressed in a neat fashion, or with excessive slack, will not be accepted.

3.6 CABLE LABELING

A. Alpha-numeric numbering shall be developed by Installing Contractor, under the direction of the Owners IT Department. Label all equipment and cables in an identical fashion.

B. Patch Panel Labeling: Each terminal shall be identified and marked on the patch panel with the outlet port identification.

C. Outlet Port Labeling: Outlet labels for each port shall be identified and marked on the Outlet with the outlet port identification.

D. Horizontal Cables: Each cable shall be identified and marked with the outlet port identification near the cable termination point at the rear of the patch panel.

3.7 TELECOMMUNICATION ROOMS

A. The Telecommunication Rooms (MDF and designated IDF’s) shall house Telecom Wall Boards, Racks, Patch Panels, Wire Management, UPS’s, Punch Blocks, and required cable routing hardware. Racks shall be placed in a manner that will allow a minimum of 3 feet of clearance from the front and rear mounting surfaces and on one side. If one mounting rail of the rack is placed against a wall, the mounting rail shall be no closer than 6” to the wall to allow room for vertical management. Where there is more than one rack, the racks shall be ganged with vertical management hardware to provide interlay management.

3.8 TESTING OF CABLES

A. Notification shall be given a minimum of 14 days prior to any testing so that the testing may be witnessed by the Owner.

B. An ETL certified, TIA-1152 Level IIIe (ISO/IEC 11801 Level IV) Test Meter shall be used to test all balanced twisted-pair coper cabling.

C. All labeling shall match the final room number identification at completion of the project (not the room number that is indicated on the Bid Set of drawings). This includes, but is not limited to; the Outlets, Port Addresses, Patch Panels, As-Built Drawings, and Test Results.

D. Provide documentation of the following items of EACH Test Meter used:
   1. Calibration certification from a third party shall be within two-years of testing (at the time that the test is performed).
   2. Manufacturer of Test Meter.
   3. Model Number of Test Meter.
   4. Serial Number of Test Meter.
E. Copper Cables – Category 6 and 6A Cables: Each of the pairs shall be tested from the Patch Panel or Punch Block to the Outlet. The Installing Contractor shall test:
   1. Wire Map.
   2. Length.
   3. Insertion Loss / Attenuation.
   4. NEXT (Near End Cross Talk).
   5. PS-NEXT (Power Sum Near End Cross Talk).
   6. ACR-F Loss (Attenuation Crosstalk Ratio Far-end).
   7. PS ACR-F Loss (Power Sum Attenuation Crosstalk Ratio Far-end).
   8. Return Loss.
   9. Propagation Delay.
   10. Delay Skew.
   11. The following tests are only required for CAT6A cabling:
      a. PSANEXT (Power Sum Alien NEXT)
      b. PSAACRF (Power Sum Alien ACRF)
F. Copper Cables – Category 3 or 5e Cables: Each of the pairs shall be tested from the Patch Panel or Punch Block to the Outlet. The Installing Contractor shall test:
   1. Wire Map.
   2. Length.
   3. Insertion Loss / Attenuation.
   4. NEXT (Near End Cross Talk).
   5. PS-NEXT (Power Sum Near End Cross Talk).
   6. ACR-F Loss (Attenuation Crosstalk Ratio Far-end).
   7. PS ACR-F Loss (Power Sum Attenuation Crosstalk Ratio Far-end).
   8. Return Loss.
   9. Propagation Delay.
   10. Delay Skew.
G. The source of each error shall be determined, corrected, and the cable re-tested. All defective cables, connectors, connections, and related appurtenances shall be replaced and re-tested at no additional cost to the Owner.
H. Submit the Test Reports in PDF format.
I. See the O & M Manual / As built Drawing's requirements in this specification and also in Section 270000 for additional requirements.
J. Acceptance of these test procedures is predicated on the Installing Contractor's use of the recommended products including, but not limited to; the specified cable type, patch panels, outlets, punch blocks, specified equipment identified in Part 2 and the installation standards of this specification. Adherence to these requirements shall be determined upon the completed installation and will be evaluated in the context of each of these factors.

3.9 FIRE RATED PENETRATIONS

A. Install per manufacturers recommendations.
B. Maintain all Code and AHJ requirements.
C. See Section 270528 for additional requirements.

3.10 WARRANTY

A. Upon final installation, a certificate providing a "Performance and Application Warranty" shall be provided to the owner. This warranty shall be valid for a period of no less than 25 Years. The warranty shall be direct to the end user, from the manufacturer, supported through the installing and certified Installing Contractor, and shall cover both materials and labor costs for any claims related to the warranty program. If the Installing Contractor were to default, the manufacturer will assume responsibility of employing another certified installer to maintain the existing warranty. Bids from installers or Installing Contractors who are not certified by the connecting hardware manufacturer and wire manufacturer at the time of project bid, will be rejected.

3.11 OPERATION & MAINTENANCE MANUALS (O&M'S)

A. Provide all Operation & Maintenance Manuals (O&M's) documentation as defined in Section 270000 Low Voltage Systems General Requirements and listed elsewhere in this specification.

B. Provide hard copies of the Test Results of EACH Cable tested.

C. Provide the Test Results on CD in PDF format.

3.12 AS-BUILT DRAWINGS

A. Provide all As-Built documentation as defined in Section 270000 Low Voltage Systems General Requirements and listed elsewhere in this specification.

B. All labeling shall match the final room number identification at completion of the project (not the room number that is indicated on the Bid Set of drawings). This includes, but is not limited to; the Outlets, Port Addresses, Patch Panels, As-Built Drawings, and Test Results.

C. Update all documents provided in the Submittal and Shop Drawings to accurately reflect the actual equipment that was provided for this project, and the actual locations of the installed equipment.

D. The Installing Contractor shall provide As-Built drawings to the Architect, which clearly indicates:

1. The floor plan of the building showing the As-Built location of Telecommunication Outlets and their associated Port Address(es), conduit runs, and terminal cabinets.
2. A list of EACH Telecommunication Outlet and the associated Port Address(es) shall clearly be identified according to system labeling scheme. Show all ports and punchdowns.
3. Provide (3) sets of complete As-Builts.

END OF SECTION

SECTION 311000 - SITE CLEARING

PART 1 - GENERAL

1.01 SUMMARY

A. This Section includes the following:
   1. Removing existing trees, shrubs, groundcovers plants and grass.
   2. Clearing and grubbing.
   3. Removing above- and below-grade site improvements including but not limited to fencing, gates, gravel drives and walkways, pavements, signage, structures, and other appurtenances.
   4. Disconnecting, capping, or sealing, and abandoning site utilities in place and removing site utilities where indicated.
   5. Temporary erosion and sedimentation control measures.
   6. Alleviation or prevention of nuisance dust.

B. Related Sections include the following:
   1. Division 01 Section "Execution and Closeout Requirements" for verifying utility locations and for recording field measurements.
   2. Division 01 Section on "Temporary Facilities and Controls" for protecting trees remaining on-site that are affected by site operations.
   3. Division 31 Section "Earth Moving" for soil materials, excavating, backfilling, and site grading.
   4. Division 32 Section “Soil Preparation” for finish grading including preparing and placing planting soil mixes.
   5. Division 32 Sections "Turf and Grasses,” and “Plants" for planting requirements.
   6. Drawings and Sections 1-07, 2-01 and 2-02 of the WSDOT 2023 Standard Specifications for Road, Bridge, and Municipal Construction, Amendments and Special Provisions (WSDOT Special Provisions).

1.02 DEFINITION

A. Clearing is defined as removal of debris, brush, shrubs, vines, sod, and other vegetative growth at or above the ground surface.

B. Grubbing is defined as removal of vegetative growth or natural wooden items at or below ground surface, which remain after clearing work.

C. Tree Removal: Removal of trees, including stumps.

D. Demolition is defined as removal of fences, portion of structures, pavements, utilities, and other such manmade items at or below the ground surface. Salvage and deliver to Owner items noted in plans or as directed by Owner’s Representative.

E. Disposal is defined as removal of refuse resulting from clearing, grubbing, and demolition work.

F. Tree Protection Zone: Area surrounding individual trees or groups of trees to be protected during construction and defined by the drip line of individual trees or the perimeter drip line of groups of trees, unless otherwise indicated.

G. Tree: Persistent woody vegetation over 15 feet in height.

H. Brush: Persistent woody vegetation 15 feet or less in height.

1.03 OWNERSHIP OF MATERIALS

A. Unless otherwise shown, specified, or designated for salvage, all materials resulting from the grubbing, clearing and demolition work shall become the property of the Contractor and shall be disposed of off-site in a lawful manner.

1.04 SUBMITTALS

A. Photographs or videotape, sufficiently detailed, of existing conditions of trees and plantings, adjoining construction, and site improvements that might be misconstrued as damage caused by site clearing.

1.05 PROJECT CONDITIONS

A. Traffic: Minimize interference with adjoining roads, streets, walks, and other adjacent occupied or used facilities during site-clearing operations.

1. Do not close or obstruct streets, walks, or other adjacent occupied or used facilities without permission from Owner and authorities having jurisdiction.
2. Provide alternate routes around closed or obstructed traffic ways if required by authorities having jurisdiction.
3. Provide flaggers as needed to ensure public safety.

B. Salvable Improvements: Carefully remove items indicated to be salvaged and store on the Owner's premises where indicated.

C. Do not commence site clearing operations until temporary erosion and sedimentation control measures are in place.

PART 2 - PRODUCTS

2.01 SOIL MATERIALS

A. Satisfactory Soil Materials: Requirements for satisfactory soil materials are specified in Division 31 Section "Earth Moving."

2.02 WATER

A. If temporary water meter is required, Contractor is responsible for this expense at no additional cost to the Owner.

B. Water used in dust control shall be free of silts and other materials deleterious to the quality of the material to which it is applied or with which it is mixed.

C. Unless otherwise specified in the Special Provisions, make all necessary arrangements for obtaining water and pay all costs involved in its procurement. Provide and maintain equipment necessary to pump, haul and place the water. Maintain an adequate supply of water at all times.

2.03 MISCELLANEOUS PRODUCTS

A. Herbicide: Round-Up Pro or approved equal.

PART 3 - EXECUTION

3.01 INSPECTION OF SITE

A. Prior to commencement of Work under this section, the Owner's Representatives shall inspect the site to fully determine the extent of work requirements and limitations.

3.02 PREPARATION

A. Protect and maintain benchmarks and survey control points from disturbance during construction.

B. Locate and clearly flag trees and vegetation to remain or to be relocated. Do not use paint to mark trees to remain.

C. Protect existing site improvements to remain from damage during construction.
1. Restore damaged improvements to their original condition, as acceptable to the Owner or Owner's Representative at no additional cost to the Owner.
2. Install and maintain tree protection barriers.

3.03 UTILITIES

A. Utility Locator Service: Notify utility locator service for area where Project is located before site clearing. Call Utilities Underground Location Center (800) 424-5555 (or 811).

B. The Contractor is responsible for determining which utility agencies, public or private, have underground or surface facilities. Locate and identify, with visible markings, existing underground utilities in the areas of work. If utilities are to remain in place, provide adequate means of protection during excavation operations. Repair of damage to known utilities resulting from Work under this section shall be the responsibility of Contractor.

C. Locate, identify, disconnect, and seal or cap off utilities indicated to be removed on the Drawings. Disconnect existing service lines to be abandoned and cap exposed service lines to be maintained.
1. Arrange with utility companies to shut off indicated utilities.

D. Consult the utility owner immediately for directions if uncharted piping or other utilities are encountered during excavation. Cooperate with the owner and public and private utility companies in keeping their respective services and facilities in operation. Repair damaged utilities to the satisfaction of the utility owner. The cost of repairing charted utilities shall be paid by the contractor.

E. Existing Utilities: Do not interrupt utilities serving facilities occupied by the Owner or others unless permitted under the following conditions and then only after arranging to provide temporary utility services according to requirements indicated:
   1. Notify Owner's Representative not less than 2 days in advance of proposed utility interruptions.
   2. Do not proceed with utility interruptions without written permission of the Owner's Representative and then only after acceptable temporary utility services have been provided.
   3. Refer to WSDOT Amendments and Special Provisions Section 1-07 for a list of utility owner contact information.

3.04 CLEARING AND GRUBBING

A. Remove obstructions, trees, shrubs, grass, and other vegetation to permit installation of new construction.
   1. Do not remove trees, shrubs, and other vegetation indicated to remain or to be relocated.
   2. Cut minor roots and branches of trees indicated to remain in a clean and careful manner where such roots and branches obstruct installation of new construction.
   3. Grind stumps and remove roots larger than one inch in diameter, obstructions, and debris extending to a depth of 24 inches below exposed subgrade.
   4. Use only hand methods for grubbing within tree protection zone.
   5. Chip removed tree branches and stockpile or spread onto areas approved by Owner's Representative.

B. Fill depressions caused by clearing and grubbing operations with satisfactory soil material unless further excavation or earthwork is indicated.
   1. Place fill material in horizontal layers not exceeding a loose depth of 8 inches and compact each layer to a density equal to adjacent original ground.

3.05 SOIL PREPARATION

A. Apply Roundup Pro to existing sod and grass areas per the manufacturer's recommendations. Tillage should be delayed for 7 days after application to allow for translocation into underground plant parts. Contractor to ensure grass has been killed prior to tilling activities and multiple applications might be required.

B. Till in dead sod and grass areas to an 8" depth. Till sod, grass and root systems into the existing soil until there is an even texture and the organics are fully incorporated into the soil.

C. Do not apply Roundup Pro or till soil under drip lines of existing trees to remain. Do not apply Round Up Pro in the wetland and habitat areas. Maintain a 200' no spray zone along the identified wetland boundary. Coordinate with the Owner prior to spraying.

3.06 SITE IMPROVEMENTS DEMOLITION

A. Remove existing above- and below-grade improvements as indicated on the Drawings and as necessary to facilitate new construction.

B. Remove paving, curbs, gravel driveways, gutters, and aggregate base as indicated on the Drawings.

C. Remove all debris from demolition work from the site as specified in this section.
   1. The removal of debris, construction materials, loose rocks and other materials at or below grade encountered while grading is considered incidental to the site preparation work.

3.07 DISPOSAL OF WASTE MATERIAL

A. All debris, rubbish and other waste materials removed under this section shall be removed from the site and disposed of in a lawful manner at Contractor's expense.
   1. Separate recyclable materials produced during site clearing from other non-recyclable materials. Store or stockpile without intermixing with other materials and transport them to recycling facilities.

3.08 DUST CONTROL

A. Provide a dust control media, such as water, to control on-site dust and to prevent dust from leaving the site. Failure may result in the Owner providing dust control measures at Contractor's expense.

B. Watering shall be performed at any hour of the day and on any day of the week that the Owner's Representative may determine necessary for adequate alleviation of dust nuisance. Wastage of water or watering which is detrimental to other Work shall be avoided and such operations ceased until the Owner's Representative determines what corrective measures shall be taken.

C. Watering shall be by means of tank trucks equipped with spray bars, by hose and nozzle or by other means, any and all of which shall insure uniform and controlled application.

3.09 BACKFILLING AND CLEAN-UP

A. Leave the work site in a clean and slightly condition, free from litter and debris.

END OF SECTION

SECTION 312000 - EARTH MOVING

PART 1 - GENERAL

1.01 SUMMARY

A. Section Includes:
   1. Site excavation and embankment.
   2. Preparing subgrades for slabs-on-grade, walks, pavements, turf and grasses, and plants.
   3. Excavating, stockpiling, and placement of topsoil
   4. Excavating and backfilling for buildings and structures.
   5. Drainage course for concrete slabs-on-grade.
   6. Base course for concrete walks and pavements.
   7. Excavating and backfilling for utility trenches.

B. Related sections include the following:
   1. Division 31 Section “Site Clearing”
   2. Division 32 Section “Soil Preparation” for finish grading including preparing and placing planting soil mixes.
   3. Sections 2-03, 2-06, 4-04 and 9-03 of the WSDOT 2023 Standard Specifications for Road, Bridge, and Municipal Construction (WSDOT Standard Specifications).

1.02 DEFINITIONS

A. WSDOT: Washington Department of Transportation.

B. WSDOT "Standard Specifications for Road, Bridge, and Municipal Construction 2023,” hereby known as the Standard Specifications.

C. Base Course: Aggregate layer placed between the subgrade and hot-mix asphalt pavement, or aggregate layer placed between the subgrade and a cement concrete pavement, or a cement concrete or hot-mix asphalt walk.

D. Bedding Course: Aggregate layer placed over the excavated subgrade in a trench before laying pipe.

E. Borrow Soil: Satisfactory soil imported from off-site for use as fill or backfill.

F. Drainage Course: Approved aggregate layer supporting the slab.

G. Excavation: Removal of material encountered above subgrade elevations and to lines and dimensions indicated.
   1. Authorized Additional Excavation: Excavation below subgrade elevations or beyond indicated lines and dimensions as directed by Engineer. Authorized additional excavation and replacement material will be paid for according to Contract provisions for changes in the Work and the following provisions:
      a. Measurement for authorized additional excavation and replacement material shall be based on the volume of in-situ material, and placed fill including compaction.
      b. Payment for authorized additional excavation shall be based on the unit price for export as submitted in the Contractor’s schedule of values but may be adjusted based on additional trucking and increased dump fees if approved by the Owner.
      c. Payment for replacement material shall be based on the unit price for import as submitted in the Contractor’s schedule of values.
      d. When truckloads or scale tickets are used as means of calculating volume, scale tickets shall be submitted for exported authorized additional excavation and replacement material by the end of each workday following the date of shipment. A conversion rate of no more than 1.85 tons/CY shall apply to exported material, and no less than 1.65 tons/CY shall apply to replacement material.
   2. Unauthorized Excavation: Excavation below subgrade elevations or beyond indicated lines and dimensions without direction by Engineer. Unauthorized excavation, as well as replacement backfill, and remedial work directed by Engineer, shall be without additional compensation.

H. Fill: Soil materials used to raise existing grades.

I. Structures: Buildings, footings, foundations, retaining walls, slabs, tanks, curbs, mechanical and electrical appurtenances, or other man-made stationary features constructed above or below the ground surface.
J. Subgrade: Uppermost surface of an excavation or the top surface of a fill or backfill immediately below drainage fill, drainage course, or topsoil materials.
K. Unsuitable material: Material meeting WSDOT 2-03.3(14)E, which is unusable for foundation or pavement subgrade and has no other practical use on the site. If unknown unsuitable material is encountered, such as groundwater-saturated muck, it may become authorized additional excavation; however, this shall not apply to excavated, stockpiled, or open-excavation materials that have become unsuitable due to inadequate weather protection.
L. Utilities: On-site underground pipes, conduits, ducts, and cables, as well as underground services within buildings.

1.03 QUALITY ASSURANCE
A. Pre-excavation Conference: Conduct conference at Project site.
1. The conference shall be held 1 week prior to ground disturbing activities.
2. Contractor, earthwork subcontractor, Engineer, and Owner's Representative shall attend.
3. Contractor shall provide estimated timeline of earthwork efforts, source of import material, plan for stockpiling and material storage (if necessary), and assurance that all erosion control devices and temporary tree and plant protection measures are in place prior to work.
B. Perform work in accordance with the Conclusions and Recommendations in following geotechnical reports:
1. Station 53:
a. Geotechnical Engineering Investigation, Proposed Addition – Fire Station 5-3 by Kane Environmental, Inc., Seattle, WA. April 14, 2010
2. Station 57:
a. Geotechnical Engineering Investigation, Proposed Addition – Fire Station 5-7 by Kane Environmental, Inc., Seattle, WA. April 14, 2010.

1.04 PROJECT CONDITIONS
A. Utility Locator Service: Utility locates shall be performed prior to starting earth moving activities.
B. Do not commence earth moving operations until plant-protection measures specified in Division 01 Section "Temporary Facilities and Controls" and erosion control BMPs are in place.

PART 2 - <u>PRODUCTS</u>

2.01 SOIL MATERIALS
A. General: Provide borrow soil materials when sufficient satisfactory soil materials are not available from excavations or as noted in the plans.
B. Satisfactory Soils: Moisture conditioned native soils and as approved by the Engineer.
C. Unsatisfactory Soils: Soil as rejected by the Engineer.
D. Base Course: Crushed Surfacing Base Course, meeting the requirements in Section 9-03.9(3) of the WSDOT Standard Specifications.
E. Engineered Fill: Naturally or artificially graded mixture of natural or crushed gravel, crushed stone, and natural or crushed sand; ASTM D 2940; with at least 90 percent passing a 1-1/2-inch sieve and not more than 12 percent passing a No. 200 sieve.
F. Bedding Course: Gravel Backfill for Pipe Zone Bedding, meeting the requirements in Section 9-03.12(3) of the WSDOT Standard Specifications.
G. Drainage Course: Gravel Backfill for Drains, meeting the requirements in Section 9-03.12(4) of the WSDOT Standard Specifications.
H. Topsoil: Natural or cultivated surface-soil layer containing organic matter and sand, silt, and clay particles; friable, pervious, and black or a darker shade of brown, gray, or red than underlying subsoil; reasonably free of subsoil, clay lumps, gravel, and other objects more than 2 inches in diameter; and free of subsoil and weeds, roots, toxic materials, or other non-soil materials.

2.02 ACCESSORIES

A. Warning Tape: Acid- and alkali-resistant, polyethylene film warning tape manufactured for marking and identifying underground utilities, 6 inches wide and 4 mils thick, continuously inscribed with a description of the utility; colored to comply with local practice or requirements of authorities having jurisdiction.

B. Tracer Wire: All non-metallic pipes shall be installed with #14 copper tracer wire containing a metallic core encased in a protective jacket for corrosion protection, detectable by metal detector when buried up to 60 inches deep; colored to comply with local practice or requirements of authorities having jurisdiction.

PART 3 - <u>EXECUTION</u>

3.01 PREPARATION

A. Protect structures, utilities, sidewalks, pavements, and other facilities to remain from damage caused by settlement, lateral movement, undermining, washout, and other hazards created by earth moving operations.

B. Protect and maintain erosion and sedimentation controls during earth moving operations.

C. Remove temporary protection before placing subsequent materials.

3.02 EXCAVATION FOR STRUCTURES

A. Excavate to indicated elevations and dimensions within a tolerance of plus or minus 1 inch. If applicable, extend excavations a sufficient distance from structures for placing and removing concrete formwork, for installing services and other construction, and for inspections.

1. Excavations for Footings and Foundations: Do not disturb bottom of excavation. Excavate by hand to final grade just before placing concrete reinforcement. Trim bottoms to subgrade and obtain the Engineers approval of the subgrade.

B. Excavations at Edges of Tree- and Plant-Protection Zones:

1. Excavate by hand to indicated lines, cross sections, elevations, and subgrades. Use narrow-tine spading forks to comb soil and expose roots. Do not break, tear, or chop exposed roots. Do not use mechanical equipment that rips, tears, or pulls roots.

2. Cut and protect roots according to requirements in Division 01 Section "Temporary Tree and Plant Protection."

3.03 EXCAVATION FOR WALKS AND PAVEMENTS

A. Excavate surfaces under walks and pavements to indicated lines, cross sections, elevations, and subgrades.

3.04 EXCAVATION FOR UTILITY TRENCHES

A. Excavate trenches to indicated gradients, lines, depths, elevations, per Drawings and the WSDOT Standard Specifications, Amendments and Special Provisions.

B. Trenches in Tree- and Plant-Protection Zones:

1. Hand-excavate to indicated lines, cross sections, elevations, and subgrades. Use narrow-tine spading forks to comb soil and expose roots. Do not break, tear, or chop exposed roots. Do not use mechanical equipment that rips, tears, or pulls roots.

2. Do not cut main lateral roots or taproots; cut only smaller roots that interfere with installation of utilities.

3. Cut and protect roots according to requirements in Division 01 Section "Temporary Facilities and Controls."

3.05 SUBGRADE INSPECTION

A. Proof-roll subgrade below the building slabs and pavements with a pneumatic-tired dump truck to identify soft pockets and areas of excess yielding. Do not proof-roll wet or saturated subgrades.

B. Reconstruct subgrades damaged by freezing temperatures, frost, rain, accumulated water, or construction activities, as directed by Engineer, without additional compensation.

3.06 UNAUTHORIZED EXCAVATION

A. Fill unauthorized excavation under foundations or wall footings by extending bottom elevation of concrete foundation or footing to excavation bottom, without altering top elevation. Lean concrete fill, with 28-day compressive strength of 2500 psi, may be used when approved by the Engineer.

1. Fill unauthorized excavations under other construction, pipe, or conduit as directed by the Engineer.
2. Unauthorized excavation replacement shall be at the Contractors expense and the

3.07 STORAGE OF SOIL MATERIALS

A. Stockpile soil materials away from edge of excavations. Do not store within drip line of remaining trees.

3.08 UTILITY TRENCH BACKFILL

A. Place bedding on subgrades free of mud, frost, snow, or ice.
B. Place and compact bedding course on trench bottoms and where indicated. Shape bedding course to provide continuous support for bells, joints, and barrels of pipes and for joints, fittings, and bodies of conduits.
C. Trenches under Footings: Backfill trenches excavated under footings and within 18 inches of bottom of footings with satisfactory soil; fill remainder of trench with concrete to elevation of bottom of footings.
D. Trenches under Roadways: Use materials as indicated. For less than 30-inches of cover, ductile iron or C-900 pipe is required. A minimum of 18-inches of cover is required.
E. Place and compact bedding, free of particles larger than 1 inch in any dimension, to a height of 12 inches over the pipe or conduit.
   1. Carefully compact initial bedding under pipe haunches and compact evenly up on both sides and along the full length of piping or conduit to avoid damage or displacement of piping or conduit. Coordinate backfilling with utilities testing.
F. Wrap all non-metallic pipe with #14 copper tracer wire prior to backfill.
G. Place and compact final backfill of satisfactory soil to final subgrade elevation.
H. Install warning tape directly above utilities, 12 inches below finished grade, except 6 inches below subgrade under pavements and slabs.

3.09 SOIL FILL

A. Terrace material per WSDOT Standard Specifications Section 2-03.3(14). Terraces shall also penetrate the slope at least 5-feet and shall not be more than 2-feet high.
B. Place and compact fill material in layers to required elevations as follows:
   1. Under grass and planted areas, use satisfactory soil material.
   2. Under walks and pavements, use satisfactory soil material.
   3. Under steps and ramps, use satisfactory soil material.
   4. Under building slabs, use satisfactory soil material.
   5. Under footings and foundations, use satisfactory soil material.

3.10 SOIL MOISTURE CONTROL

A. Uniformly moisten or aerate subgrade and each subsequent fill or backfill soil layer before compaction to within 2 percent of optimum moisture content.
B. Do not place backfill or fill soil material on surfaces that are muddy, frozen, or contain frost or ice.
C. Remove and replace, or scarify and air dry, otherwise satisfactory soil material that exceeds optimum moisture content by 2 percent and is too wet to compact to specified dry unit weight.

3.11 COMPACTION OF SOIL BACKFILLS AND FILLS

A. Place backfill and fill soil materials in layers not more than 12 inches in loose depth for material compaction.
B. Place backfill and fill soil materials evenly on all sides of structures to required elevations, and uniformly along the full length of each structure.
C. Compact soil materials to not less than the following percentages of maximum dry unit weight according to ASTM D 1557 (Modified Proctor):
   1. Under structures, building slabs, steps, and pavements, compact existing subgrade and each layer of backfill or fill soil material at 95 percent.
   2. Under walkways, scarify and recompact the top 6 inches below subgrade and compact each layer of backfill or fill soil material at 95 percent.
   3. Under turf or unpaved areas, scarify and recompact the top 6 inches below subgrade and compact each layer of backfill or fill soil material at 90 percent.
   4. For utility trenches, compact each layer of initial and final backfill soil material at 95 percent.

3.12 TOPSOIL PLACEMENT

A. Prepare topsoil in accordance with Division 32 Section “Soil Preparation”.

3.13 GRADING

A. General: Uniformly grade areas to a smooth surface, free of irregular surface changes. Comply with compaction requirements and grade to cross sections, lines, and elevations indicated.

B. Site Rough Grading: Slope grades to direct water away from buildings and to prevent ponding. Finish subgrades to required elevations within the following tolerances:

1. Turf or Unpaved Areas: Plus or minus 1 inch.
2. Walks: Plus or minus 1 inch.
3. Pavements: Plus or minus 1/2 inch.

C. Grading inside Building Lines: Finish subgrade to a tolerance of 1/2 inch when tested with a 10-foot straightedge.

3.14 BASE COURSES UNDER IMPERVIOUS PAVEMENTS AND WALKS

A. Place base course on subgrades free of mud, frost, snow, or ice.

B. On prepared subgrade, place base course under pavements and walks as follows:

1. Shape base course to required crown elevations and cross-slope grades.
2. Place base course that exceeds 6 inches in compacted thickness in layers of equal thickness, with no compacted layer more than 6 inches thick or less than 3 inches

C. Compact base course at optimum moisture content to required grades, lines, cross sections, and thickness to not less than 95 percent of maximum dry unit weight according to ASTM D 698.

3.15 FIELD QUALITY CONTROL

A. Allow the testing agency to inspect and test subgrades and each fill or backfill layer. Proceed with subsequent earth moving only after test results for previously completed work comply with requirements.

B. Footing Subgrade: At footing subgrades, at least one test of each soil stratum will be performed to verify design bearing capacities. Subsequent verification and approval of other footing subgrades may be based on a visual comparison of subgrade with tested subgrade when approved by the Owner’s representative.

C. When testing agency reports that subgrades, fills, or backfills have not achieved degree of compaction specified, scarify, and moisten or aerate, or remove and replace soil materials to depth required; recompact and retest until specified compaction is obtained.

3.16 PROTECTION

A. Protecting Graded Areas: Protect newly graded areas from traffic, freezing, and erosion. Keep free of trash and debris.

B. Repair and reestablish grades to specified tolerances where completed or partially completed surfaces become eroded, rutted, settled, or where they lose compaction due to subsequent construction operations or weather conditions.

C. Where settling occurs before Project correction period elapses, remove finished surfacing, backfill with additional soil material, compact, and reconstruct surfacing.
Restore appearance, quality, and condition of finished surfacing to match adjacent work, and eliminate evidence of restoration to greatest extent possible.

END OF SECTION

SECTION 312500 - EROSION AND SEDIMENT CONTROL

PART 1 - GENERAL

1.01 SUMMARY

A. Installation of slope protection and erosion control measures as shown on the Drawings, and as specified herein for the following:
   1. Temporary Construction Fencing
   2. Erosion Control Blanket (Jute Netting)
   3. Gravel Construction Entrance
   4. Plastic Sheeting
   5. Silt Fencing
   6. Straw Wattles
   7. Temporary Storm Inlet Protection

B. Related Sections include the following:
   1. Division 31 Section "Earthwork" for excavation, filling and backfilling, and grading.
   2. Division 32 Section “Turf and Grasses” for erosion control seed mixes.

1.02 DEFINITIONS

A. Temporary: Erosion and sediment control measures to be removed after completion of the project and after Owner's Representative or governing agency issues notification of acceptance of stabilization.

B. Subgrade: Surface or elevation of subsoil remaining after completing excavation, or top surface of a fill or backfill immediately beneath planting soil.

1.03 DESIGN REQUIREMENTS

A. Erosion and Sediment Control Plan: Refer to the following Stormwater Pollution Prevention Plan (SWPPP)s. The Drawings and SWPPPs shall not relieve Contractor of responsibility for effective erosion and sediment control throughout the Project Sites.
   1. Construction Stormwater Pollution Prevention Plan for Gig Harbor Fire & Medic One Station 53 by MacKay Sposito, Federal Way, WA. April 2023.
   2. Construction Stormwater Pollution Prevention Plan for Gig Harbor Fire & Medic One Station 57 by MacKay Sposito, Federal Way, WA. April 2023.

B. Soil Stabilization and Slope Protection: Required on slopes of 33 percent (three to one) gradient and steeper and where aggregate elevation change is 10 feet or more. Prevent soil loss to wind, water, and traffic and control growth of unwanted vegetation; provide rice or wheat straw or other acceptable soil cover.

C. Fill and Stockpiled Soil Material: Coordinate grading with site slopes to permit free drainage and prevent impounding of water.

D. Where impounded water on site exceeds 2 feet in depth, barricade the affected area until the water has subsided.

E. Flowing and Standing Water:
   1. Control to prevent erosion and excessive ponding.
   2. Do not discharge turbid water from the site.
   3. Prevent contamination of water on site from construction materials and debris, including fuels and lubricants.
   4. Do not use filtering devices as a means of control.

1.04 SUBMITTALS

A. The implementation and construction, and maintenance of all slope stability and erosion control shall be the responsibility of the Contractor. Temporary slope stability and erosion control measures shall be maintained during construction and shall be removed and disposed of by the Contractor after completion of the Project and after notification of acceptance of stabilization. The Owner's Representative reserves the right to approve and authorize alterations.
   1. Indicate implementation date(s) and maintenance routine.
   2. Provide contact information, including telephone for the Contractor’s designated emergency response person.

B. Product Data: For each type of product indicated.
C. Product Certification: For straw, documentation that shows either (1) that the straw is from a Washington State certified seed field or (2) the seed lab test results of the seed harvested from the straw.

1.05 QUALITY ASSURANCE
A. Installer Qualifications: A qualified installer whose work has prior experience in implementing erosion and sediment control measures.
B. Preinstallation Conference: Conduct conference at Project Site to comply with requirements in Division 1 Section "Project Management and Coordination."
C. Reference Standards:
1. Pierce County “2021 Stormwater Management & Site Development Manual”
2. WSDOT “2023 Standard Specifications for Road, Bridge, and Municipal Construction”

1.06 DELIVERY, STORAGE, AND HANDLING
A. Materials to be delivered to site in original sealed, labeled, and undamaged packaging. Any damaged materials are to be disregarded and removed from the Project Site.

1.07 SCHEDULING
A. Implement Control Plan prior to start of site clearing and earthwork as necessary for effective prevention of erosion and sediment control based on conditions and the nature of the Work. Implement Control Plan at least two days prior to start of site clearing, earthwork and other activities that may disturb soil and/or vegetation.
B. After approval and initial implementation modify the sediment and erosion control measures as necessary to adapt to changing site conditions due to the progress of the Work, environmental conditions and other factors that could reduce the effectiveness of initial measures. Modifications may include but are not limited to incorporation of permanent site improvements, extending controls already in place, and incorporating additional control measures.
C. Site Improvements included in the Work may be incorporated into the Contractor’s erosion and sediment control plan where acceptable to the Owner. Permanent facilities have not been designed for conditions during the construction period. The adequacy of these structures as temporary controls shall be determined by the Contractor. Provide temporary measures until permanent improvements are available.
1. At Substantial Completion, permanent improvements utilized by the Contractor for temporary controls shall be delivered to the Owner in “as new” condition.

1.08 MAINTENANCE
A. Periodically, and following each rainstorm and other significant weather events, inspect control measures and clean, reinforce and modify them as necessary to ensure continued control of erosion and sedimentation.
1. Removable Protective Devices: In place on each day for which the five-day rain forecast is greater than 40 percent.
2. Immediately repair damage to slope surface protection and soil stabilization measures.
B. Maintain Erosion and Sediment control at planted areas until Substantial Completion; comply with inspection and repair requirements throughout the project duration. Remove and dispose of controls upon written authorization following Substantial Completion.
C. From October 1 through April 30, an emergency response crew appropriately sized for the site area and the scope of control measures necessary, shall be available and able to respond to site emergencies in a timely manner.
1. Maintenance and remedial materials for repair and extension of control measures shall be stockpiled on the Site for routine maintenance and emergency service measures as necessary to control conditions at the Site.
2. Emergency Contact Person shall be directly responsible for the emergency response crew.

PART 2 - <u>PRODUCTS</u>

2.01 CONSTRUCTION FENCING
A. Orange Polyethylene (HDPE) Mesh Fencing Fabric: 48-inch-wide rolls.
B. Posts: 2 x 2 x 60-inch fir, pine, or metal fence posts.

2.02 EROSION CONTROL BLANKET

A. Erosion Control Blanket shall be 100 percent biodegradable woven from machine spun bristle twines with no seams. The blanket shall be Geocoir/DeKoWe 400, Rolanka Bio D Mat 40, or approved equal with the following minimum average roll properties:
   1. Thickness 0.35 inches (ASTM D1777).
   2. Average Tensile Strength 660lbs/ft (ASTM D4595).
   3. Weight 13.6 oz/sy (ASTM D3776).
   4. Open Area 65 percent (measured).
   5. Roll Width 6.5 and 13.1 feet (measured).
   6. Roll Length 165 feet (measured).
   7. Include manufacturer's recommended steel wire staples, 6 inches long.

B. Wooden Stakes: Untreated Douglas Fir 3/4 x 1/2 x 18-inch wood stakes.

2.03 GRAVEL CONSTRUCTION ENTRANCE

A. Aggregate subgrade: 2-inch-minus gravel; ASTM D 448, 4" min. depth.

B. Topping: 4 to 8-inch quarry spalls, 12" min. depth.

2.04 PLASTIC SHEETING

A. Polyethylene plastic (minimum 6mm thick).

2.05 SILT FENCING

A. Woven geotextile, specifically manufactured for use as a separation geotextile; made from polyolefins, polyesters, or polyamides; and with the following minimum properties determined according to ASTM D 4759 and referenced standard test methods:
   1. Grab Tensile Strength: 200 lbf (890 N); ASTM D 4632.
   2. Tear Strength: 75 lbf (333 N); ASTM D 4533.
   3. Puncture Resistance: 90 lbf (400 N); ASTM D 4833.
   4. Water Flow Rate: 4 gpm per sq. ft. (2.7 L/s per sq. m); ASTM D 4491.
   5. Apparent Opening Size: No. 30 (0.6 mm); ASTM D 4751.

B. Posts: 2 x 2 x 48-inch fir, pine, or metal fence posts.

2.06 MULCH

A. Mulch materials free of noxious weed seeds and plants and contain no substance detrimental to plant life. The materials shall not be moldy, caked, decayed or of otherwise low quality.

2.07 TACKIFIER

A. Coherex, Marloc, Soil Seal, J-Tack, or approved substitute.

2.08 EROSION CONTROL ACCESSORIES

A. Erosion Control Fabric: 700X by Mirafi or approved substitute.

B. Ground stabilization Fabric: 500X or 600X by Mirafi or approved substitute.

C. Staples: 6-inches long, U-shaped steel.

2.09 HYDROMULCH

A. Acceptable Hydromulch: Silva-fiber by Weyerhaeuser Company with erosion control seed as specified or as approved by Owner's Representative.

2.10 WATER

A. Make all necessary arrangements to provide water needed for Work.

2.11 STRAW WATTLES

A. Straw: Provide air-dry, clean, mildew-free and seed-free rice straw, or approved equal.

B. Plastic Netting: Tubular black plastic netting with a strand thickness of 0.30 inch and a knot thickness of 0.055 and a weight of 0.35 ounce per foot and shall be made from 85 percent high density polyethylene.

C. Wooden Stakes: Untreated Douglas Fir 1 x 2 x 18-inch wood stakes or approved equal.

PART 3 - <u>EXECUTION</u>

3.01 INSPECTION

A. Verify site conditions and note irregularities affecting work of this Section.

B. Beginning work of this Section means acceptance of existing conditions.

3.02 INSTALLATION

A. Construction Fencing:
   1. Fencing to be installed in locations as shown on Drawings.

2. Installation of fencing per manufactures specifications. Fencing posts to be placed at a maximum of 8 feet O.C.

B. Erosion Control Blanket:
1. Install erosion control blanket in locations shown on Drawings.
2. Prior to installing blankets, apply any necessary lime, fertilizer, and seed.
3. Anchor beginning of blanket in 6 inch deep by 6-inch-wide trench with approximately 12 inches of blanket extending beyond trench. Anchor blanket with a row of staples/stakes approximately 6 inches apart. Backfill and compact trench after stapling. Apply seed and compacted soil and fold and secure remaining 12 inches of blanket back over on itself with row of staple/stakes placed 12 inches apart.
4. Roll blankets either down slope or horizontally across slope. Unroll blankets per manufacturer's specifications and secure with staples in appropriate locations as shown in the manufacturer's staple pattern guide.
5. The edges of parallel blankets must be stapled together with a minimum of 6-inch overlap. Consecutively spliced together blankets must be placed end over end with a minimum of 6 inches of overlap. Staple through overlapped area, approximately 12 inches apart across entire blanket width.

C. Gravel Construction Entrance:
1. Construction entrances shall be installed at the beginning of construction and maintained for the duration of the project in a condition that will prevent tracking or flowing of sediment into public roadways. Apply a minimum 4-inch gravel layer construction entrance at approved access points around project site. Add subgrade reinforcement geotextile, as needed.
2. Existing gravel entrance or parking lot may constitute an appropriate gravel construction entrance, if approved by the Owner's Representative.
3. If the gravel pad does not adequately remove dirt and mud from vehicle wheels such that mud and dirt tracking is evident off site, additional measures must be taken. Such measures may include hosing off wheels before vehicles leave the site or other construction techniques/work operation modifications.
4. Wheel washing should be done on the gravel pad and wash water should drain through a silt-trapping structure prior to leaving the construction site. Where wheels from vehicles leaving the site are washed, ensure that water carrying sediments or other contaminates remains on gravel roadbed or designated surface.
5. Additional gravel shall be added periodically, if necessary, to maintain proper function of the pad.

D. Plastic Sheeting
1. Provide plastic sheeting during construction to prevent the transport of sediment from the Project Site as directed by the Owner's Representative.
2. Install plastic sheeting over exposed or stockpiled soils and debris.

E. Silt Fencing:
1. Silt fencing shall be placed prior to any site grading or surface disturbance.
2. Provide silt fencing at tops of toes of slopes, and at edges of grading activities, and at locations indicated on the Drawings.
3. Posts to be placed at a maximum of 6 feet O.C. Embed silt fencing a minimum of 6 inches below subgrade.

F. Mulch
1. Perform the work only when local weather and other conditions are favorable to mulching. Do not undertake the work when wind velocities would prevent uniform application of materials or would drift materials.
2. Place mulch to a reasonably uniform thickness of 1-1/2 to 2-1/2 inches, and average approximately 2 inches in loose condition. Mulch may be spread by hand or with a mulch blower.
3. Apply a nontoxic copolymer to act as a tacking agent, either applied after the mulch is spread or sprayed into the mulch as it is being blown onto the soil.

G. Hydromulch
   1. Apply hydromulch in slurry form with hydroseeding equipment at seed rate specified. See Division 2 Section “Lawns and Grasses.”
H. Straw Wattles
   1. Straw wattles to be installed in locations as shown on Drawings. Straw wattles shall be placed along slope contours and staked 4 feet O.C. with wooden stakes.
   2. Approved straw material shall be placed in black plastic netting. Straw waddles shall be 9 inches in diameter, 25 feet in length, and weigh approximately 30 pounds. The ends of the straw waddles shall be tightly butted together.

3.03 CATCH BASIN PROTECTION

A. Storm drain inlets which are operational prior to permanent stabilization of the disturbed area shall be protected to prevent sediment from entering the storm drain system.
B. Protect all catch basins, drains, and inlets from sedimentation using inlet sediment control devices, or other techniques approved by local jurisdiction.

3.04 MAINTENANCE

A. Maintenance, replacement, and upgrading erosion control measures are the responsibility of the Contractor until all construction is completed and notification of acceptance of stabilization.
B. The erosion and sediment control measures must be installed in conjunction with clearing and grading.
C. All erosion and sediment control measures to be inspected daily and maintained as necessary to ensure continued functioning.
D. Stabilized gravel construction entrances will be installed at the beginning of construction and shall be maintained for the duration of the project. Additional measures must be taken by the Contractor when necessary to ensure that all paved areas are left clean for the duration of the project.

3.05 REPAIR

A. Site improvements including, but not limited to, on grade and subgrade construction, porous and nonporous pavement assemblies and landscaping was damaged or lost due to failure of erosion and sediment controls, (including required Contractor maintenance), shall be replaced and repaired as acceptable to the Owner's Representative at no additional cost to the Owner.
   1. Drainage Systems obstructed by silt and debris due to noncompliance controls shall be cleaned and restored to full serviceability.
   2. Remedial work shall include all work originally provided as Work of the Contract including but not limited to earthwork for subgrade improvements and providing effective erosion and sediment controls.

3.06 SITE CLEAN UP

A. Upon completion of Project and after notification of acceptance of stabilization, Construction Fencing, Gravel Construction Entrances, Plastic Sheeting, Silt Fences, Straw Wattles, Inlet Protection and any other temporary erosion and sediment control measures are to be removed from the site by the Contractor within 30 days.

END OF SECTION

SECTION 321216 - ASPHALT PAVING

PART 1 - GENERAL

1.01 RELATED DOCUMENTS

A. Drawings and general provisions of the Contract, including General and Supplementary Conditions and Division 01 Specification Sections, apply to this Section.

1.02 SUMMARY

A. Section Includes:
   1. Cold milling of existing hot-mix asphalt pavement.
   2. Hot-mix asphalt patching.
   3. Hot-mix asphalt paving.
   4. Hot-mix asphalt paving overlay.
   5. Asphalt surface treatments.
   6. Pavement-marking paint.

B. Related Sections:
   1. Division 02 Section " Demolition" for demolition, removal, and recycling of existing asphalt pavements, and for geotextiles that are not embedded within courses of asphalt paving.
   2. Division 31 Section "Earth Moving" for aggregate subbase and base courses and for aggregate pavement shoulders.
   3. Division 32 Section "Concrete Paving" for joint sealants and fillers at paving terminations.
   4. Section 5-04 of the WSDOT 2023 “Standard Specifications for Road, Bridge, and Municipal Construction” (WSDOT Standard Specifications)
   5. “Manual on Design Guidelines and Specifications for Road and Bridge Construction in Pierce County” amended May 1, 2022, and 2022 “Pierce County Standard Drawings”.

1.03 DEFINITION

A. Asphalt Binder Reference Cost: Index price of asphalt binder as published on the following website: https://wsdot.wa.gov/business-wsdot/how-do-business-us/public-works-contracts/payments-reporting/asphalt-binder-reference-cost
   1. Base Cost = Most recent “Date Effective” Asphalt Binder Reference Cost for Western Washington at the time of Bid Opening
   2. Current Reference Cost = Most recent “Date Effective” Asphalt Binder Reference Cost for Western Washington at the time of HMA Purchase

B. Hot Mix Asphalt (HMA) – Top layer of asphalt paving section above the crushed surfacing course

C. Other Hot-Mix Asphalt Paving Terminology: Refer to ASTM D 8 for definitions of terms.

1.04 SUBMITTALS

A. Product Data: For each type of product indicated. Include technical data and tested physical and performance properties.
   1. HMA Pavement: For each job mix proposed for the Work provide confirmation that mix design is current on WSDOT’s QPL list.
   2. Crushed Surfacing

B. Shop Drawings: Indicate pavement markings and defined parking spaces. Indicate, with international symbol of accessibility, spaces allocated for people with disabilities.

1.05 QUALITY ASSURANCE

A. Manufacturer Qualifications: A paving-mix manufacturer registered with and approved by the WSDOT.

B. Installer Qualifications: Imprinted-asphalt manufacturer's authorized installer who is trained and approved for installation of imprinted asphalt required for this Project.

C. Testing Agency Qualifications: Qualified according to ASTM D 3666 for testing indicated.

D. Regulatory Requirements: Comply with materials, workmanship, and other applicable requirements of Section 5-04 of the WSDOT Standard Specification.
   1. Measurement and payment provisions and safety program submittals included in standard specifications do not apply to this Section.

E. Pre-installation Meeting:

1. The general contractor, paving subcontractor, paving superintendent, owner's representative, and engineer shall meet at the office of the engineer one week prior to site paving. Attendance is mandatory by all parties.
2. Contractor shall provide proposed methods and procedures related to hot-mix asphalt paving including, but not limited to, the following:
   a. Proposed sources of paving materials, including capabilities and location of plant that will manufacture hot-mix asphalt.
   b. Graphic paving plan for review
   c. List of proposed equipment, including size of paving machine, rollers, and other compaction equipment.
   d. Estimated time work shall begin.
3. The following shall be reviewed in detail:
   a. Review condition of subgrade and preparatory work.
   b. Review requirements for protecting paving work, including restriction of traffic during installation period and for remainder of construction period.
   c. Review and finalize construction schedule and verify availability of materials, Installer's personnel, equipment, and facilities needed to make progress and avoid delays.
   d. No vibratory compaction shall be allowed when the surface temperature of material is less than 185°F. All compaction equipment operators shall be in possession of an operating infrared heat gun to ensure compliance.
   e. Tapering or feathering of asphalt joints shall not be allowed. Joints shall be stacked.
   f. Paving activities shall not begin until surface temperatures have met those stated in Section 1.07.
   g. Diesel shall not be stored on any paving machine during operations. Diesel shall not be used for any other purpose other than fueling equipment.

F. Subgrade Walk
   1. Contractor and Engineer shall walk the prepared subgrade prior to paving activities. Any deficiencies identified during the walk shall be corrected prior to paving.

1.06 DELIVERY, STORAGE, AND HANDLING

A. Deliver pavement-marking materials to Project site in original packages with seals unbroken and bearing manufacturer's labels containing brand name and type of material, date of manufacture, and directions for storage.

B. Store pavement-marking materials in a clean, dry, protected location within the temperature range required by manufacturer. Protect stored materials from direct sunlight.

1.07 PROJECT CONDITIONS

A. This specification section is exclusively for use at Station 53. The pavement at Station 57 consists of pervious concrete, for which this specification section does not apply.

B. Environmental Limitations: Do not apply asphalt materials if subgrade is wet or excessively damp, if rain is imminent or expected before time required for adequate cure, or if the following conditions are not met:
   1. Prime Coat: Minimum surface temperature of 60 deg F.
   2. Tack Coat: Minimum surface temperature of 60 deg F.
   3. Slurry Coat: Comply with weather limitations in ASTM D 3910.
   4. Asphalt Base Course: Minimum surface temperature of 60 deg. F and rising at time of placement.
   5. Asphalt Surface Course: Minimum surface temperature of 60 deg F at time of placement.

C. Pavement-Marking Paint: Proceed with pavement marking only on clean, dry surfaces and at a minimum ambient or surface temperature of 40 deg F for oil-based materials, 55 deg for water-based materials, and not exceeding 95-degree F. Retain paragraph below for coated imprinted asphalt.

1.08 MODIFICATION TO HOT MIX ASPHALT (HMA) PRICING

A. A price adjustment is included in the Contract based on the Asphalt Binder Reference Cost.
   1. This price adjustment shall only apply to the material cost of HMA. Equipment, labor, and all other materials shall not be included in this price adjustment.

B. HMA pricing will be adjusted using the following formulas:
   1. If the Asphalt Binder Reference Cost increases from the time of Bid Opening to the time of HMA Purchase, the Contractor will be compensated using the following formula:
      a. Change Order to Contractor = (Current Reference Cost – (1.05 x Base Cost)) x (Quantity of HMA purchased in tons x 0.056).
   2. If the Asphalt Binder Reference Cost decreases from the time of Bid Opening to the time of HMA purchase, the Contractor will issue a credit back to the owner using the following formula:
      a. Credit to Owner = (Current Reference Cost – (0.95 x Base Cost)) x (Quantity of HMA purchased in tons x 0.056).
   3. The Current Reference Cost will be reviewed for each pay period when HMA is purchased, and either a Change Order to the Contractor or Credit to the Owner will be issued at that time.
   4. No Change Order or Credit shall be issued if the Current Reference Cost is within 5% of the Base Cost.
C. The maximum quantity of HMA for which this price adjustment can be applied is 800 tons for the entire project scope.
D. The Contractor shall include the Base Reference Cost for Western Washington and the corresponding “Date Effective” on the Bid Form. This Base Reference Cost will be in effect at the time of Bid Opening and confirmed by the Owner prior to the Contract Award.
E. The Contractor shall provide an invoice of the HMA cost as part of the documentation for a Change Order to the Contractor or a Credit to the Owner.

PART 2 - PRODUCTS

2.01 AGGREGATES
A. General: Use materials and gradations that have performed satisfactorily in previous installations.
B. Crushed Surfacing Base Course (CSBC) shall meet the requirements of Section 9-03.9(3) of the Standard Specifications except that the material shall not have more than 6% by dry weight pass the No. 200 sieve (wet sieve test).
C. Crushed Surfacing Top Course (CSTC) shall meet the requirements of Section 9-03.9(3) of the Standard Specifications except that the material shall not have more than 6% by dry weight pass the No. 200 sieve (wet sieve test).
D. Mineral Filler: ASTM D 242, rock or slag dust, hydraulic cement, or other inert material.

2.02 ASPHALT MATERIALS
A. Asphalt Binder: AASHTO M 332 Table 1, PG 58H-22 Min. 91% Compaction.
B. Asphalt Cement: ASTM D 946
C. Prime Coat: ASTM D 2027, medium-curing cutback asphalt, MC-250.
D. Prime Coat: Asphalt emulsion prime coat complying with Washington DOT requirements.
E. Water: Potable.
F. Undersealing Asphalt: ASTM D 3141, pumping consistency.

2.03 AUXILIARY MATERIALS
A. Herbicide: Commercial chemical for weed control, registered by the EPA. Provide in granular, liquid, or wettable powder form.
B. Sand: ASTM D 1073, Grade Nos. 2 or 3.
C. Paving Geotextile: AASHTO M 288, nonwoven polypropylene; resistant to chemical attack, rot, and mildew; and specifically designed for paving applications.
D. Joint Sealant: ASTM D 6690, hot-applied, single-component, polymer-modified bituminous sealant.
E. Pavement-Marking Paint: Alkyd-resin type, lead and chromate free, ready mixed, complying with AASHTO M 248, Type N, colors complying with FS TT-P-1952. All pavement markings (directional arrows, crosswalks, stop bars, ADA markings, and other items that are private) shall be painted with two coats. No thermoplastic markings stall be installed on the private applications.
   1. Color:
      a. White: Federal Standard 595, color number 37875
      b. Yellow: Federal Standard 595, color number 33538

c. Red: Federal Standard 595, color number 31350
d. Blue: Federal Standard 595, color number 35180

F. Glass Beads: AASHTO M 247, Type 1.

G. Wheel Stops, Concrete: Precast, air-entrained concrete, 2500-psi minimum compressive strength, 4-1/2 inches high by 9 inches wide by 72 inches long. Provide chamfered corners, drainage slots on underside, and holes for anchoring to substrate.
1. Dowels: Galvanized steel, 3/4-inch diameter, 10-inch minimum length.

2.04 MIXES

A. Hot-Mix Asphalt: Dense, hot-laid, hot-mix asphalt plant mixes approved by authorities having jurisdiction and complying with the following requirements:
1. Provide mixes with a history of satisfactory performance in Western Washington.
2. Crushed Surfacing Top Course meeting the requirements of WSDOT Standard Specification Section 9-03.9(3).
3. Crushed Surfacing Base Course meeting the requirements of WSDOT Standard Specification Section 9-03.9(3).

PART 3 - <u>EXECUTION</u>

3.01 EXAMINATION

A. Verify that subgrade is dry and in suitable condition to begin paving.

B. Proof-roll subgrade below pavements with heavy pneumatic-tired equipment to identify soft pockets and areas of excess yielding. Do not proof-roll wet or saturated subgrades.
1. Completely proof-roll subgrade in one direction. Limit vehicle speed to 3 mph.
2. Proof roll with a loaded 10-wheel, tandem-axle dump truck weighing not less than 15 tons.
3. Excavate soft spots, unsatisfactory soils, and areas of excessive pumping or rutting, as determined by Engineer, and replace with compacted backfill or fill as directed.

C. Proceed with paving only after unsatisfactory conditions have been corrected.

D. Verify that utilities, traffic loop detectors, and other items requiring a cut and installation beneath the asphalt surface have been completed and that asphalt surface has been repaired flush with adjacent asphalt prior to beginning installation of imprinted asphalt.

3.02 COLD MILLING

A. Clean existing pavement surface of loose and deleterious material immediately before cold milling. Remove existing asphalt pavement by cold milling to grades and cross sections indicated.
1. Mill to a depth of 3”.
2. Mill to a uniform finished surface free of excessive gouges, grooves, and ridges.
3. Control rate of milling to prevent tearing of existing asphalt course.
4. Repair or replace curbs, manholes, and other construction damaged during cold milling.
5. Excavate and trim unbound-aggregate base course, if encountered, and keep material separate from milled hot-mix asphalt.
6. Transport milled hot-mix asphalt to asphalt recycling facility.
7. Keep milled pavement surface free of loose material and dust.

3.03 PATCHING

A. Hot-Mix Asphalt Pavement: Saw cut perimeter of patch and excavate existing pavement section to sound base. Excavate rectangular or trapezoidal patches, extending 12 inches (300mm) into adjacent sound pavement, unless otherwise indicated. Cut excavation faces vertically. Remove excavated material. Recompact existing unbound-aggregate base course to form new subgrade.

B. Portland Cement Concrete Pavement: Break cracked slabs and roll as required to reseat concrete pieces firmly.
1. Pump hot undersealing asphalt under rocking slab until slab is stabilized or, if necessary, crack slab into pieces and roll to reseat pieces firmly.
2. Remove disintegrated or badly cracked pavement. Excavate rectangular or trapezoidal patches, extending into adjacent sound pavement, unless otherwise indicated. Cut excavation faces vertically. Recompact existing unbound-aggregate base course to form new subgrade.

C. Tack Coat: Apply uniformly to vertical surfaces abutting or projecting into new, hot-mix asphalt paving at a rate of 0.05 to 0.15 gal./sq. yd.

1. Allow tack coat to cure undisturbed before applying hot-mix asphalt paving.
2. Avoid smearing or staining adjoining surfaces, appurtenances, and surroundings. Remove spillages and clean affected surfaces.

D. Patching: Fill excavated pavements with hot-mix asphalt base mix for full thickness of patch and, while still hot, compact flush with adjacent surface.

3.04 SURFACE PREPARATION

A. General: Immediately before placing asphalt materials, remove loose and deleterious material from substrate surfaces. Ensure that prepared subgrade is ready to receive paving.

B. Herbicide Treatment: Apply herbicide according to manufacturer's recommended rates and written application instructions. Apply to dry, prepared subgrade or surface of compacted-aggregate base before applying paving materials.
1. Mix herbicide with prime coat if formulated by manufacturer for that purpose.

C. Tack Coat: Apply uniformly to surfaces of existing pavement at a rate of 0.05 to 0.15 gal./sq. yd.
1. Allow tack coat to cure undisturbed before applying hot-mix asphalt paving.
2. Avoid smearing or staining adjoining surfaces, appurtenances, and surroundings. Remove spillages and clean affected surfaces.

3.05 HOT-MIX ASPHALT PLACING

A. Machine place hot-mix asphalt on prepared surface, spread uniformly, and strike off. Place asphalt mix by hand to areas inaccessible to equipment in a manner that prevents segregation of mix. Place each course to required grade, cross section, and thickness when compacted.
1. Place hot-mix asphalt base course in number of lifts and thicknesses indicated.
2. Place hot-mix asphalt surface course in single lift.
3. Spread mix at minimum temperature of 250 deg F.
4. Begin applying mix along centerline of crown for crowned sections and on high side of one-way slopes unless otherwise indicated.
5. Regulate paver machine speed to obtain smooth, continuous surface free of pulls and tears in asphalt-paving mat.

B. Place paving in consecutive strips not less than 10 feet wide unless infill edge strips of a lesser width are required.
1. After the first strip has been placed and rolled, place succeeding strips and extend rolling to overlap previous strips. Complete a section of asphalt base course before placing asphalt surface course.

C. Promptly correct surface irregularities in paving course behind paver. Use suitable hand tools to remove excess material forming high spots. Fill depressions with hot-mix asphalt to prevent segregation of mix; use suitable hand tools to smooth surface.

3.06 JOINTS

A. Construct joints to ensure a continuous bond between adjoining paving sections. Construct joints free of depressions, with same texture and smoothness as other sections of hot-mix asphalt course.
1. Clean contact surfaces and apply tack coat to joints.
2. Offset longitudinal joints, in successive courses, a minimum of 6 inches.
3. Offset transverse joints, in successive courses, a minimum of 24 inches.
4. Construct transverse joints at each point where the paver ends a day's work and resumes work at a subsequent time.
5. Compact joints as soon as hot-mix asphalt will bear roller weight without excessive displacement.
6. Compact asphalt at joints to a density within 2 percent of specified course density.
7. Tapering or feathering of asphalt joints shall not be allowed. Joints shall be stacked.

3.07 COMPACTION

A. General: Begin compaction as soon as placed hot-mix paving will bear roller weight without excessive displacement. Compact hot-mix paving with hot, hand tampers or with vibratory-plate compactors in areas inaccessible to rollers.
1. Complete compaction before mix temperature cools to 185 deg F.

B. Breakdown Rolling: Complete breakdown or initial rolling immediately after rolling joints and outside edge. Examine surface immediately after breakdown rolling for indicated crown, grade, and smoothness. Correct laydown and rolling operations to comply with requirements.
C. Intermediate Rolling: Begin intermediate rolling immediately after breakdown rolling while hot-mix asphalt is still hot enough to achieve specified density. Continue rolling until hot-mix asphalt course has been uniformly compacted to the following density:
D. Finish Rolling: Finish roll paved surfaces to remove roller marks while hot-mix asphalt is still warm. No vibratory compaction shall be allowed when the surface temperature of the material is less than 185°F.
E. Edge Shaping: While surface is being compacted and finished, trim edges of pavement to proper alignment. Bevel edges while asphalt is still hot; compact thoroughly.
F. Alignment: Bevel edges while asphalt is still hot; compact thoroughly.
G. Repairs: Remove paved areas that are defective or contaminated with foreign materials and replace with fresh, hot-mix asphalt. Compact by rolling to specified density and surface smoothness.
H. Protection: After final rolling, do not permit vehicular traffic on pavement until it has cooled and hardened.
I. Erect barricades to protect paving from traffic until mixture has cooled enough not to become marked.

3.08 PAVEMENT MARKING
A. Do not apply pavement-marking paint until layout, colors, and placement have been verified by the Engineer.
B. Allow paving to age for 30 days before starting pavement marking and not prior to pavement marker manufacturer recommendations.
C. Sweep and clean the surface to eliminate loose material and dust.
D. Apply paint with mechanical equipment to produce pavement markings, of dimensions indicated, with uniform, straight edges. Apply at manufacturer's recommended rates to provide a minimum wet film thickness of 15 mils.
1. Broadcast glass beads uniformly into wet pavement markings at a rate of 6 lb/gal.

3.09 WHEEL STOPS
A. Install wheel stops in bed of adhesive as recommended by manufacturer.
B. Securely attach wheel stops to pavement with not less than two galvanized-steel dowels embedded at one-quarter to one-third points. Securely install dowels into pavement and bond to wheel stop. Recess head of dowel beneath top of wheel stop.

3.10 FIELD QUALITY CONTROL
A. Testing Agency: Owner will engage a qualified testing agency to perform tests and inspections.
B. Thickness: In-place compacted thickness of hot-mix asphalt courses will be determined according to ASTM D 3549.
C. Surface Smoothness: Finished surface of each hot-mix asphalt course will be tested for compliance with smoothness tolerances.
D. In-Place Density: Testing agency will take samples of uncompacted paving mixtures and compacted pavement according to ASTM D 979.
1. Reference maximum theoretical density will be determined by averaging results from four samples of hot-mix asphalt-paving mixture delivered daily to site, prepared according to ASTM D 2041, and compacted according to job-mix specifications.
2. In-place density of compacted pavement will be determined by a properly calibrated nuclear asphalt testing device.
3. Compaction tests shall be performed at a rate of one per 5,000 square feet maximum, for each lift or course of asphalt concrete placed.
E. Remove and replace or install additional hot-mix asphalt where test results or measurements indicate that it does not comply with specified requirements.

3.11 DISPOSAL
A. Except for material indicated to be recycled, remove excavated materials from Project site and legally dispose of them in an EPA-approved landfill.

1. Do not allow milled materials to accumulate on-site.

END OF SECTION

SECTION 321313 - CONCRETE PAVING

PART 1 - GENERAL

1.01 SUMMARY

A. This Section includes exterior cast-in-place concrete, including reinforcement, concrete materials, mix design, placement procedures, and finishes for the following:
   1. Concrete pavement
   2. Concrete sidewalks
   3. Concrete curbs
   4. Concrete driveway aprons

B. Related Sections include the following:
   1. Division 31 Section "Earth Moving" for subgrade preparation, grading, and base course.
   2. Division 03 Section "Cast-in-Place Concrete" for concrete stairs, concrete bases, walls, and footings.
   3. Division 32 Section “Pervious Concrete Paving” for preparation and placement of non-standard concrete.
   4. Sections 5-05, 8-04, 8-06, and 8-14 of the WSDOT 2023 “Standard Specifications for Road, Bridge, and Municipal Construction” (WSDOT Standard Specifications).
   5. “Manual on Design Guidelines and Specifications for Road and Bridge Construction in Pierce County” amended May 1, 2022, and 2022 “Pierce County Standard Drawings”.

1.02 DEFINITIONS

A. Cementitious Materials: Portland cement alone or in combination with one or more of blended hydraulic cement, fly ash and other Pozzolans, and ground granulated blast-furnace slag.

1.03 SUBMITTALS

A. Product Data: For each type of manufactured material and product indicated.

B. Design Mixtures: For each concrete mix indicated, submit mix design with substantiating test data in conformance with UBC Section 1905, a minimum of two weeks prior to scheduled pour.

C. Aggregates: Normal-weight aggregates used in concrete mix where exposed aggregate finish is specified.

D. Material Test Reports: From a qualified testing agency indicating and interpreting test results for compliance with requirements indicated.

E. Minutes of pre-installation conference.

1.04 QUALITY ASSURANCE

A. Manufacturer Qualifications: Manufacturer of ready-mixed concrete products who complies with ASTM C 94 requirements for production facilities and equipment.
   1. Manufacturer certified according to NRMCA's "Certification of Ready Mixed Concrete Production Facilities."

B. ACI Publications: Comply with ACI 301, "Specification for Structural Concrete," unless modified by requirements in the Contract Documents.

C. Standard Specifications: Perform site concrete Work in compliance with the latest edition of the “Standard Specifications for Road, Bridge and Municipal Construction” prepared by Washington State Department of Transportation (WSDOT) and American Public Works Association (APWA), Washington State Chapter. Comply with the more stringent of the WSDOT Sections of Division 5, 6, and 9 or the ASTM Standards listed below.

D. Concrete Testing Service: Engage a qualified testing agency to perform material evaluation tests and to design concrete mixtures.

E. Formwork Observation: Before placing concrete, verify that installation of formwork, reinforcement, and embedded items is complete and that required inspections have been performed. Notify Owner’s Representative 48 hours minimum prior to placing concrete that formwork is in place and ready for observation. Do not proceed with concrete placement prior to obtaining Owner’s Representative’s approval that formwork meets the lines and grades intended on the Drawings. Concrete placed without the Owner’s Representative’s approval of formwork shall be removed and replaced at no additional cost to the Owner.

1.05 PROJECT CONDITIONS

A. Unless specifically noted in the drawings, this specification section shall not apply to parking stalls and driveways at Station 57. Refer to section 321343 – Pervious Concrete Paving for those areas.

B. Traffic Control: Maintain access for vehicular and pedestrian traffic as required for other construction activities. Provide barricades, cones and signs required for driveway closures and detours. See Section 1-10 of the WSDOT Standard Specifications for additional requirements.

C. Cold-Weather Protection: Do not use frozen materials or materials mixed with or coated with ice or frost.

D. Weather Limitations for Adhesive Application: Apply adhesive for tactile warning mats only when ambient temperature is above 50 deg F and when temperature has not been below 35 deg F for 12 hours immediately before application. Do not apply adhesive when substrate is wet or contains excess moisture.

1.06 WARRANTY

A. Special Warranty: Manufacturer agrees to repair or replace components of tactile warning surfaces that fail in materials or workmanship within specified warranty period.

1. Failures include, but are not limited to, the following:

a. Deterioration of finishes beyond normal weathering and wear.

b. Separation or delamination of materials and components.

2. Warranty Period: Five years from date of Substantial Completion.

PART 2 - <u>PRODUCTS</u>

2.01 FORMS

A. Form Materials: Plywood, metal, metal-framed plywood, or other approved panel-type materials to provide full-depth, continuous, straight, smooth exposed surfaces. Provide appropriate form liner material to shape the reveal patterns indicated on the Drawings.

B. Form-Release Agent: Commercially formulated form-release agent that will not bond with, stain, or adversely affect concrete surfaces and will not impair subsequent treatments of concrete surfaces.

2.02 STEEL REINFORCEMENT

A. Reinforcing and Tie Bars: ASTM A 615/A 615M, Grade 60; deformed.

B. Steel Bar Mats: ASTM A 184/A 184M; with ASTM A 615/A 615M, Grade 60, deformed bars; assembled with clips.

C. Plain Steel Wire: ASTM A 82, as drawn.

D. Deformed-Steel Wire: ASTM A 496.

E. Bar Supports: Bolsters, chairs, spacers, and other devices for spacing, supporting, and fastening reinforcing bars, welded wire reinforcement, and dowels in place. Manufacture bar supports according to CRSI's "Manual of Standard Practice" from steel wire, plastic, or precast concrete of greater compressive strength than concrete.

2.03 CONCRETE MATERIALS

A. Cementitious Material: Use one of the following cementitious materials, of the same type, brand, and source throughout the Project:

1. Portland Cement: ASTM C 150, Type I or II or I/II, gray. Supplement with the following:

a. Fly Ash: ASTM C 618, Class C or F.

b. Ground Granulated Blast-Furnace Slag: ASTM C 989, Grade 100 or 120.

B. Normal-Weight Aggregates: ASTM C 33, Class 4M coarse aggregate, uniformly graded. Provide aggregates from a single source.

1. Maximum Coarse-Aggregate Size: Not exceeding 1 inch nominal.

2. Fine Aggregate: Free of materials with deleterious reactivity to alkali in cement, when tested in accordance with ASTM C 1260.

3. Aggregate Sizes: 3/4 to 1 inch nominal.

4. Aggregate Sizes: 1/2-to-3/4-inch nominal.

5. Aggregate Sizes: 3/8-to-5/8-inch nominal.

C. Water: ASTM C 94.

D. Air-Entraining Admixture: ASTM C 260.

E. Chemical Admixtures: Provide admixtures certified by manufacturer to be compatible with other admixtures and to contain no more than 0.1 percent water-soluble chloride ions by mass of cementitious material.
   1. Water-Reducing Admixture: ASTM C 494, Type A.
   2. High-Range, Water-Reducing Admixture: ASTM C 494, Type F.

2.04 RELATED MATERIALS

A. Expansion Joint Filler Strips: ASTM D 3575, 1/2-inch closed-cell polyurethane foam backing, with removable joint cap, Sonneborn Sonolastic Expansion Joint Filler, or approved equal.
B. Joint Primer: ASTM C 920, Type S, Grade P, Class 25. Solvent based primer for preparing concrete surfaces for adhesion to sealant. Sonneborn Sonolastic Primer 733 or approved equal.
C. Joint Sealant: ASTM C 920, Type S, Grade P, Class 25. Non-priming, single-component, polyurethane sealant, Sonneborn Sonolastic SL1, or approved equal.
D. Backer Rod: Non-gassing, reticulated closed-cell polyethylene rod designed for use with cold-applied joint sealants where joint depth exceeds manufacturer's recommended depth for joint sealant. Comply with ASTM C 1330, Type C. Size as required for joint design. Sonneborn Sonolastic Closed-Cell Backer Rod or approved equal.
E. Bonding Agent: ASTM C 1059, Type II, non-redispersible, acrylic emulsion or styrene butadiene.
F. Curing Compounds for Non-Colored Cement Concrete: Clear, ASTM C 309, non- staining.

2.05 CONCRETE MIXTURES

A. Prepare design mixtures, proportioned according to ACI 301, for each type and strength of normal-weight concrete determined by either laboratory trial mixes or field experience.
   1. Use a qualified independent testing agency for preparing and reporting proposed concrete mixture designs for the trial batch method.
B. Proportion mixtures to provide normal-weight concrete with the following properties:
   1. Compressive Strength (28 Days): 3000 psi.
   2. Maximum Water-Cementitious Materials Ratio at Point of Placement: 0.50.
   3. Slump Limit: 4 to 4-1/2 inches without Water-Reducing Admixtures; 5 inches with Water-Reducing Admixtures.
      a. Slump Limit for Concrete Containing High-Range Water-Reducing Admixture: When a high-range water-reducing admixture is used, the maximum limit may be increased an additional 2 inches.
C. Add air-entraining admixture at manufacturer's prescribed rate to result in concrete at point of placement having an air content of 4 to 6 percent.
D. Limit water-soluble, chloride-ion content in hardened concrete to 0.15 percent by weight of cement.
E. Chemical Admixtures: Use admixtures according to manufacturer's written instructions.
   1. Use water-reducing admixture and/or high-range, water-reducing admixture in concrete, as required, for placement and workability.
   2. Use water-reducing and retarding admixture when required by high temperatures, low humidity, or other adverse placement conditions.
F. Cementitious Materials: Limit percentage, by weight, of cementitious materials other than portland cement according to ACI 301 requirements as follows:
   1. Fly Ash or Pozzolans: 25 percent.
   2. Ground Granulated Blast-Furnace Slag: 50 percent.
   3. Combined Fly Ash or Pozzolans, and Ground Granulated Blast-Furnace Slag: 50 percent, with fly ash or Pozzolans not exceeding 25 percent.

2.06 CONCRETE MIXING

A. Ready-Mixed Concrete: Measure, batch, and mix concrete materials and concrete according to ASTM C 94. Furnish batch certificates for each batch discharged and used in the Work.
   1. When the air temperature is between 85- and 90-degrees Fahrenheit reduce mixing and delivery time from 1-1/2 hours to 75 minutes; when air temperature is above 90 degrees Fahrenheit, reduce mixing and delivery time to 60 minutes.

B. Project-Site Mixing: Comply with requirements and measure, batch, and mix concrete materials and concrete according to ASTM C 94. Mix concrete materials in appropriate drum-type batch machine mixer.
   1. For concrete mixes of 1 cu. yd. or smaller, continue mixing at least 1-1/2 minutes, but not more than 5 minutes after ingredients are in mixer, before any part of batch is released.
   2. For concrete mixes larger than 1 cu. yd., increase mixing time by 15 seconds for each additional 1 cu. yd.

C. Provide batch ticket for each batch discharged and used in the Work, indicating Project identification name and number, date, mixture type, mixing time, quantity, and amount of water added.

2.07 DETECTABLE WARNING MATS

A. Surface-Applied Detectable Warning Mats: Accessible truncated-dome detectable warning resilient mats, UV resistant, manufactured for adhering to existing concrete walkway surfaces, with slip-resistant surface treatment on domes, field of mat, and beveled outside edges.
   1. Material: Modified rubber compound, UV resistant.
   2. Color: Yellow.
   3. Shapes and Sizes: Rectangular Panel, 24 by 48 inches.
   4. Dome Spacing and Configuration: min. 1.6-inch to max. 2.4-inch spacing in square pattern.
   5. Mounting: Adhered to pavement surface with adhesive and fastened with fasteners.

B. Fasteners and Anchors: Manufacturer's standard as required for secure anchorage of tactile warning surfaces, noncorrosive and compatible with each material joined, and complying with the following.
   1. Type 304 stainless-steel fasteners for exterior use.
   2. Fastener Heads: For nonstructural connections, use flathead or oval countersunk screws and bolts with tamper-resistant heads, colored to match tile.

C. Adhesive: As recommended by manufacturer for adhering tactile warning surfacing unit to pavement.

D. Sealant: As recommended by manufacturer for sealing perimeter of tactile warning surfacing unit.

PART 3 - <u>EXECUTION</u>

3.01 EXAMINATION

A. Examine exposed subgrades and surfaces for compliance with requirements for dimensional, grading, and elevation tolerances.

B. Proceed with concrete placement operations only after nonconforming conditions have been corrected.

C. Verify that pavement is in suitable condition to begin installation of detectable warning mats in according to manufacturer's written instructions. Verify that installation of tactile warning surfacing will comply with accessibility requirements upon completion.

3.02 PREPARATION

A. Proof-roll prepared base course surface to check for unstable areas and verify need for additional compaction. Proceed with pavement only after nonconforming conditions have been corrected and subgrade is ready to receive pavement.

B. Remove loose material from compacted base course surface immediately before placing concrete.

3.03 EDGE FORMS AND SCREED CONSTRUCTION

A. Formwork: Design, construct, erect, shore, brace, and maintain formwork according to ACI 301.

B. Set, brace, and secure edge forms, bulkheads, and intermediate screed guides for pavement to required lines, grades, and elevations. Install forms to allow continuous progress of work and so forms can remain in place at least 24 hours after concrete placement.

C. Clean forms after each use and coat with form-release agent to ensure separation from concrete without damage.

3.04 STEEL REINFORCEMENT

A. General: Comply with CRSI's "Manual of Standard Practice" for fabricating, placing, and supporting reinforcement.

B. Clean reinforcement of loose rust and mill scale, earth, ice, or other bond-reducing materials.

C. Arrange, space, and securely tie bars and bar-supports to hold reinforcement in position during concrete placement. Maintain minimum cover to reinforcement.

D. Install fabricated bar mats in lengths as long as practicable. Handle units to keep them flat and free of distortions. Straighten bends, kinks, and other irregularities, or replace units as required before placement. Set mats for a minimum 2-inch overlap of adjacent mats.

3.05 JOINTS

A. General: Form construction, isolation, and contraction joints and tool edgings true to line with faces perpendicular to surface plane of concrete. Construct transverse joints at right angles to centerline, unless otherwise indicated.

B. Construction Joints: Set construction joints at side and end terminations of pavement and at locations where pavement operations are stopped for more than 1/2-hour unless pavement terminates at isolation joints.

1. Continue steel reinforcement across construction joints, unless otherwise indicated.
2. Butt Joints: Use bonding agent at joint locations where fresh concrete is placed against hardened or partially hardened concrete surfaces.
3. Keyed Joints: Provide preformed keyway-section forms or bulkhead forms with keys where concrete pavements abut job-built concrete curbs, unless otherwise indicated on the Drawings. Embed keys at least 1-1/2 inches into concrete.

C. Expansion Joints: Form expansion/isolation joints of preformed joint-filler strips abutting catch basins, manholes, inlets, light pole bases, structures, walks, other fixed objects, and where indicated on the Drawings.

1. Doweled Joints: Install dowel bars where new concrete paving meets existing concrete paving. Drill and epoxy one-half of bar into existing paving. Lubricate, asphalt-coat, or provide PVC sleeve on the half of dowel length embedded in new concrete to prevent concrete bonding to that side of joint.
2. Doweled Expansion Joints: Install dowel bars and support assemblies at joints where indicated on the Drawings. Lubricate, asphalt coat, or provide PVC sleeve on one-half of dowel length to prevent concrete bonding to one side of joint.
3. Locate expansion joints at intervals of 20 feet maximum, unless otherwise indicated on the Drawings.
4. Extend joint fillers full width and depth of joint.
5. Terminate joint filler flush with top of paving for joint fillers having removable joint cap.
6. Furnish joint fillers in one-piece lengths. Where more than one length is required, lace or clip joint-filler sections together.
7. Protect the top edge of joint filler during concrete placement with metal, plastic, or other temporary preformed cap. Remove protective cap after concrete has been placed on both sides of joint.
8. Allow concrete to cure minimum of 28 days.
9. Remove joint filler cap; clean and prime concrete surfaces to receive sealant per manufacturer's recommendations; and fill void with sealant to match concrete color.
10. If joint filler depth from top of paving exceeds 3/8 inch, install backer rod prior to installing joint sealant. Backer rod to be 25 percent wider than joint width. Sealant depth to be 1/2 width of joint, not to exceed 3/8 inch, whichever is smaller. Install backer rod and sealant per manufacturer's recommendations.
11. Protect sealant from pedestrian traffic until cured.
12. Clean excess sealant from paved surfaces.

D. Contraction Joints: Form weakened-plane contraction joints, sectioning concrete into areas as indicated on the Drawings. Construct contraction joints for a depth equal to at least 1/4 of the concrete thickness, at intervals of 10 feet maximum, unless otherwise indicated on the Drawings, and as follows:

1. Score Joints: Form score joints after initial floating by grooving and finishing each edge of joint with grooving tool to a 1/4-inch radius. Repeat grooving of score joints after applying surface finishes. Eliminate groover marks on concrete surfaces.

E. Edging: Tool exposed edges of ramps, sidewalks, walkways and joints in concrete after initial floating with an edging tool to a 1/2-inch radius. Repeat tooling of edges after applying surface finishes. Eliminate tool marks on concrete surfaces.

3.06 CONCRETE PLACEMENT

A. Inspection: Before placing concrete, inspect and complete formwork installation, steel reinforcement, and items to be embedded or cast in. Notify other trades to permit installation of their work.

B. Remove snow, ice, or frost from base course surface and reinforcement before placing concrete. Do not place concrete on frozen surfaces.

C. Moisten base course to provide a uniform dampened condition at time concrete is placed. Do not place concrete around manholes or other structures until they are at required finish elevation and alignment.

D. Comply with ACI 301 requirements for measuring, mixing, transporting, and placing concrete.

E. Do not add water to concrete during delivery, at Project site, or during placement.

F. Do not add water to fresh concrete after testing.

G. Deposit and spread concrete in a continuous operation between transverse joints. Do not push or drag concrete into place or use vibrators to move concrete into place.

H. Consolidate concrete according to ACI 301 by mechanical vibrating equipment supplemented by hand spading, rodding, or tamping.

1. Consolidate concrete along face of forms and adjacent to transverse joints with an internal vibrator. Keep vibrator away from joint assemblies, reinforcement, or side forms. Use only square-faced shovels for hand spreading and consolidation. Consolidate with care to prevent dislocating reinforcement, dowels, and joint devices.

I. Place concrete pavement in two operations; strike off initial pour for entire width of placement and to the required depth below finish surface. Lay welded wire fabric or fabricated bar mats immediately in final position. Place top layer of concrete, strike off, and screed.

1. Remove and replace concrete that has been placed for more than 15 minutes without being covered by the top layer or use bonding agent if approved by Owner’s Representative.

J. Screed pavement surfaces with a straightedge and strike off. Commence initial floating using bull floats or darbies to impart an open textured and uniform surface plane before excess moisture or bleed water appears on the surface. Do not further disturb concrete surfaces before beginning finishing operations or spreading surface treatments.

K. When adjoining concrete pavements are placed in separate pours, do not operate equipment on concrete until pavement has attained 85 percent of its 28-day compressive strength.

L. Cold-Weather Placement: Comply with ACI 306.1 and as follows. Protect concrete work from physical damage or reduced strength that could be caused by frost, freezing actions, or low temperatures.

1. When air temperature has fallen to or is expected to fall below 40 degrees Fahrenheit, uniformly heat water and aggregates before mixing to obtain a concrete mixture temperature of not less than 50 degrees Fahrenheit and not more than 80 degrees Fahrenheit at point of placement.
2. Do not use frozen materials or materials containing ice or snow.
3. Do not use calcium chloride, salt, or other materials containing antifreeze agents or chemical accelerators unless otherwise specified and approved in mix designs.

M. Hot-Weather Placement: Comply with ACI 301 and as follows when hot-weather conditions exist:

1. Cool ingredients before mixing to maintain concrete temperature below 90 deg F at time of placement. Chilled mixing water or chopped ice may be used to control temperature, provided water equivalent of ice is calculated to total amount of mixing water. Using liquid nitrogen to cool concrete is Contractor's option.
2. Cover steel reinforcement with water-soaked burlap so steel temperature will not exceed ambient air temperature immediately before embedding in concrete.
3. Fog-spray forms, steel reinforcement, and subgrade just before placing concrete. Keep subgrade moisture uniform without standing water, soft spots, or dry areas.

3.07 CONCRETE FINISHING

A. Float Finish Concrete Pads: Begin the second floating operation when bleed-water sheen has disappeared, and the concrete surface has stiffened sufficiently to permit operations. Float surface with power-driven floats, or by hand floating if area is small or inaccessible to power units. Finish surfaces to true planes. Cut down high spots and fill low spots. Refloat surface immediately to uniform granular texture.
   1. Medium-to-Coarse-Textured Broom Finish: Provide a coarse finish by striating float-finished concrete surface 1/16 to 1/8 inch deep with a stiff-bristled broom, perpendicular to line of traffic.

3.08 CONCRETE PROTECTION AND CURING

A. General: Protect freshly placed concrete from premature drying and excessive cold or hot temperatures.
B. Comply with ACI 306.1 for cold-weather protection.
C. Evaporation Retarder: Apply evaporation retarder to concrete surfaces if hot, dry, or windy conditions cause moisture loss approaching 0.2 lb/sq.-ft. x h before and during finishing operations. Apply according to manufacturer's written instructions after placing, screeding, and bull floating or darbying concrete, but before float finishing.
D. Begin curing after finishing concrete but not before free water has disappeared from concrete surface.
E. Curing Methods: Cure concrete by moisture curing, moisture-retaining-cover curing, curing compound, or a combination of these as follows:
   1. Moist Curing: Keep surfaces continuously moist for not less than seven days with the following materials:
      a. Water.
      b. Continuous water-fog spray.
      c. Absorptive cover, water saturated and kept continuously wet. Cover concrete surfaces and edges with a 12-inch lap over adjacent absorptive covers.
   2. Moisture-Retaining-Cover Curing: Cover concrete surfaces with moisture-retaining cover for curing concrete, placed in widest practicable width, with sides and ends lapped at least 12 inches, and sealed by waterproof tape or adhesive. Immediately repair any holes or tears during curing period using cover material and waterproof tape.

3.09 PAVEMENT TOLERANCES

A. Comply with tolerances of ACI 117 for driveways, roadways, ramps, sidewalks, walkways, and as follows:
   1. Elevation: 1/4 inch.
   2. Thickness: Plus 3/8-inch, minus 1/4 inch.
   3. Surface: Gap below 10-foot long, unleveled straightedge not to exceed 1/4 inch.
   4. Lateral Alignment and Spacing of Tie Bars and Dowels: 1 inch.
   5. Vertical Alignment of Tie Bars: 1/4 inch.
   6. Alignment of Tie-Bar End Relative to Line Perpendicular to Pavement Edge: 1/2 inch.
   7. Joint Spacing: 3 inches.
   8. Contraction Joint Depth: Plus 1/4 inch, no minus.
   9. Joint Width: Plus 1/8 inch, no minus.

3.10 FIELD QUALITY CONTROL

A. Testing Agency: Owner will engage a qualified independent testing and inspecting agency to perform field tests and inspections and prepare test reports.
B. Testing Services: Testing of composite samples of fresh concrete obtained according to ASTM C 172 shall be performed according to the following requirements:
   1. Testing Frequency: Obtain at least 1 composite sample per day, minimum.
      a. When frequency of testing will provide fewer than five compressive-strength tests for each concrete mixture, testing shall be conducted from at least five randomly selected batches or from each batch if fewer than five are used.

2. Slump: ASTM C 143; one test at point of placement for each composite sample, but not less than one test for each day's pour of each concrete mix. Perform additional tests when concrete consistency appears to change.
3. Air Content: ASTM C 231, pressure method; one test for each composite sample, but not less than one test for each day's pour of each concrete mix.
4. Concrete Temperature: ASTM C 1064; one test hourly when air temperature is 40 degrees Fahrenheit and below and when 80 degrees Fahrenheit and above, and one test for each composite sample.
5. Compression Test Specimens: ASTM C 31; cast and laboratory cure one set of three standard cylinder specimens for each composite sample.
6. Compressive-Strength Tests: ASTM C 39; test 1 specimen at 7 days and 2 specimens at 28 days.
   a. A compressive-strength test shall be the average compressive strength from 2 specimens obtained from same composite sample and tested at 28 days.

C. Strength of each concrete mix will be satisfactory if average of any 3 consecutive compressive-strength tests equals or exceeds specified compressive strength, and no compressive-strength test value falls below specified compressive strength by more than 500 psi.

D. Test results shall be reported in writing to Owner’s Representative, concrete manufacturer, and Contractor within 48 hours of testing. Reports of compressive-strength tests shall contain Project identification name and number, date of concrete placement, name of concrete testing and inspecting agency, location of concrete batch in Work, design compressive strength at 28 days, concrete mixture proportions and materials, compressive breaking strength, and type of break for both 7-day and 28-day tests.

E. Nondestructive Testing: Impact hammer, sonoscope, or other nondestructive device may be permitted by Owner’s Representative but will not be used as sole basis for approval or rejection of concrete.

F. Additional Tests: Testing and inspecting agency shall make additional tests of concrete when test results indicate that slump, air entrainment, compressive strengths, or other requirements have not been met, as directed by Owner’s Representative.

G. Remove and replace concrete where test results indicate that it does not comply with specified requirements at no additional cost to the Owner.

H. Additional testing and inspecting, at Contractor's expense, will be performed to determine compliance of replaced or additional work with specified requirements at no additional cost to the Owner.

3.11 REPAIRS AND PROTECTION

A. Remove and replace concrete that is broken, damaged, or defective or that does not comply with requirements in this Section at no additional cost to the Owner.

B. Drill test cores, where directed by Owner’s Representative, when necessary to determine magnitude of cracks or defective areas. Fill drilled core holes in satisfactory concrete areas with Portland cement concrete bonded with epoxy adhesive.

C. Protect concrete from damage. Exclude traffic from pavement for at least 14 days after placement. When construction traffic is permitted, maintain pavement as clean as possible by removing surface stains and spillage of materials as they occur.

D. Maintain concrete pavement free of stains, discoloration, dirt, and other foreign material. Sweep concrete pavement not more than two days before the date scheduled for Substantial Completion inspections.

3.12 INSTALLATION OF TACTILE WARNING SURFACING

A. General: Prepare substrate and install tactile warning surfacing according to manufacturer's written instructions unless otherwise indicated.

B. Lay out detectable warning mats as indicated and mark concrete pavement at edges of mats.

C. Prepare existing paving surface by grinding and cleaning as recommended by manufacturer.

D. Apply adhesive to the back of mat in amounts and pattern recommended by manufacturer and set mat in place. Firmly seat mat in adhesive bed, eliminating air pockets and establishing full adhesion to pavement. If necessary, temporarily apply weight to mat to ensure full contact with adhesive.
E. Install anchor devices through face of mat and into pavement using anchors located as recommended by manufacturer. Set heads of anchors flush with mat surface.
F. Mask mat perimeter and adjacent concrete and apply sealant in continuous bead around perimeter of mat.
G. Remove masking, adhesive, excess sealant, and soil from exposed surfaces of detectable warning mat and surrounding concrete pavement using cleaning agents recommended in writing by manufacturer.
H. Protect installed mat from traffic until adhesive has set.

3.13 CLEANING

A. Remove all excess material, debris, and equipment from site upon completion of work in this Section. Keep the work area clean and in an orderly condition during the Work.
B. Do not dispose of waste concrete or wash out materials on the site unless otherwise directed by the Owner's Representative. Areas to be paved may be acceptable for concrete truck wash areas only as approved by the Owner's Representative.
C. Remove and replace detectable warning mats that are broken or damaged or do not comply with requirements in this Section. Replace using detectable warning mat installation methods per manufacturer recommendations.
D. Protect detectable warning mats from damage and maintain them free of stains, discoloration, dirt, and other foreign material.

END OF SECTION

SECTION 321343 – PERVIOUS CONCRETE PAVING

PART 1 - GENERAL

1.01 SUMMARY

A. This Section includes exterior cast-in-place pervious concrete, including concrete materials, mix design, and placement procedures for the following:
   1. Pervious concrete pavement

B. Related Sections include the following:
   1. Division 31 Section "Earth Moving" for subgrade preparation, grading, and base course.
   2. Division 03 Section "Cast-in-Place Concrete" for concrete stairs, concrete bases, walls, and footings.
   3. Division 32 Section “Concrete Paving” for preparation and placement of sidewalks, curbs, and driveway aprons.
   4. Local Agency General Special Provision sections 2-06, 4-04, and 5-06 per American Public Works Association (APWA), Washington State Chapter, March 2016.
   5. WSDOT 2023 “Standard Specifications for Road, Bridge, and Municipal Construction” (WSDOT Standard Specifications).

1.02 DEFINITIONS

A. Cementitious Materials: Portland cement alone or in combination with one or more of blended hydraulic cement, fly ash and other Pozzolans, and ground granulated blast-furnace slag.

1.03 SUBMITTALS

A. Mix Design
   1. The Contractor shall provide a mix design for pervious concrete and shall submit the mix design to the Engineer in writing. Pervious concrete shall not be placed in the test panels without a mix design that has been reviewed and accepted by the Engineer.
   2. The Contractor shall include the following elements and results of the described procedures in the proposed mix design:
      a. A unique identification number for the mix design that is approved for the Job Mix Formula (JMF).
      b. Portland cement and blended hydraulic cement shall meet the requirements of Section 9-01.2(1) except that Type III Portland cement, Type IT and Type IL blended hydraulic cements, and rapid hardening hydraulic cement, shall not be used.
      c. The cementitious content, including pozzolans, if used, shall be a minimum of 480 pounds per cubic yard.
      d. The mix shall incorporate a hydration stabilizing admixture.
      e. Synthetic microfibers may be utilized at the manufacturer’s recommended dosage rate.
      f. Internal curing admixtures may be used at the dosage rate recommended by the manufacturer with the approval of the Engineer.
      g. The water / cement ratio shall not exceed 0.35.
      h. No more than 25 percent of Portland cement in the mix, by weight, may be replaced by fly ash, ground granulated blast furnace slag, or a combination of both.
      i. Coarse aggregate shall conform to Section 9-03.1(4), AASHTO Grading No. 8.
   3. The approved mix design established through the approved test panel becomes the JMF.

B. Product Data
   1. The Contractor shall submit the following items prior to placing any pervious concrete pavement:
      a. The source of all materials proposed for use in constructing pervious concrete pavement.
      b. Batch weights for all constituents of one cubic yard of the proposed pervious concrete mix.
      c. The saturated surface dry (SSD) specific gravity of all aggregates to be used in the proposed pervious concrete mix.

d. The proposed gradation of coarse aggregates used in pervious concrete.
e. The designed volume in cubic feet of all proposed components for one cubic yard of the proposed pervious concrete mix.
f. The design water / cement ratio of the proposed mix design.
g. The fresh density of the proposed pervious concrete mixture as determined by ASTM C1688.
h. Catalogue cuts and Certificates of Compliance for all proposed admixtures.
i. Mill Certification of the Portland cement and pozzolans, if used, for the current lot to be used in the production of the proposed pervious concrete mix. The Contractor shall maintain this submittal throughout the duration of the project as lots change.
j. Current certification by the National Ready Mix Concrete Association (NRMCA) for the batch plant(s) to be used in the production of pervious concrete.
k. Current certifications by the NRMCA for the trucks to be used in transporting pervious concrete from the batch plant to the point of placement.
l. Qualification documentation for current certifications by the NRMCA for the Contractor's personnel who will be installing pervious concrete. Valid acceptable documentation is the NRMCA issued wallet card or certification certificate.

2. At the time of delivery of the material to the site, the Contractor shall provide an original Certificate of Compliance for each truckload of pervious concrete. If the Certificate of Compliance from the concrete producer is not provided to the Engineer upon delivery, the truckload shall not be placed.

C. Material Test Reports: From a qualified testing agency indicating and interpreting test results for compliance with requirements indicated.

D. Minutes of pre-construction meeting.

1.04 QUALITY ASSURANCE

A. Contractor's Qualifications

1. The contractor shall employ no less than one National Ready Mixed Concrete Association (NRMCA) certified Pervious Concrete Craftsman for each crew, who must be on site, over-seeing the work during all pervious concrete placement; or employ no less than three NRMCA Certified Pervious Concrete Installers per crew, who must be on site working during each pervious concrete placement. The minimum number of certified individuals must be present on each crew for every pervious concrete placement, including the test panel placements, and a certified individual must be in charge of the placement crew and procedures.
2. If personnel used for installing pervious concrete are unqualified, inattentive to quality, or unsafe, they shall be removed or reassigned from installation of pervious concrete at the written request of the Engineer.

B. Preconstruction Meeting

1. Prior to the start of construction of the pervious concrete pavement section, including excavation of the pavement section, the Contractor shall coordinate, schedule, and attend a preconstruction meeting for the pervious concrete pavement. The following are required to attend the meeting:
   a. Owner's representative
   b. General Contractor's representative(s)
   c. Engineer of Record for the pervious concrete pavement
   d. Concrete placement lead person(s)
   e. Associated Subcontractor's representative
   f. Pervious concrete Supplier's representative
   g. Material Testing Laboratory's representative
2. The meeting shall cover all aspects of the work including, but not limited to:
   a. Submittals
   b. Short, and long term, schedule
   c. Inspection of the Work
   d. Protection of the Work

e. Pervious concrete placement
f. Curing
g. Materials
h. Specifications
i. Testing
j. Test panel and JMF
k. Acceptance criteria

C. Test Panel
1. Production placement of pervious concrete shall not occur until the Contractor has completed a test panel of pervious concrete pavement that meets all the acceptance criteria described herein and accepted by the Engineer.
2. The Contractor shall construct a test panel utilizing a minimum of seven cubic yards of pervious concrete. If multiple pavement section depths are shown on the plans, a test panel shall be constructed for each pavement section depth/thickness. The width of the test panel shall have a width no smaller than the greatest width to be constructed on the project. The test panel(s) shall include at least one joint and at the spacing specified on the plans and specifications. Test panels may be placed non-contiguously. The test panel(s) shall be equivalent and representative of the production pervious concrete pavement in all aspects including subbase, depth, joints, method of placement, curing, and preparation. Construction and evaluation of the test panel shall occur as follows:
a. Notify the Engineer at least ten Working Days before installing pervious concrete test panels.
b. Coordinate the location of the test panel with the Engineer.
c. Install the test panel in accordance with the Specifications and Plans.
d. Notify the Engineer when the test panel is ready for inspection and acceptance testing.
e. Acceptance testing will be conducted in accordance with these specifications.
f. Remove, replace, and dispose of any unsatisfactory portions of test panels as determined by the Engineer, at no additional cost to the Owner.
3. Failure to install acceptable test panel(s) of pervious concrete will indicate an unapproved test panel(s) and require new test panel(s) for review.
4. The completed and approved test panel(s) shall establish the JMF.
5. The approved test panel shall meet the requirements of these specifications.
6. Upon successful completion of the infiltration test, unless otherwise determined by the Engineer, three cores will be obtained in accordance with ASTM C42 and will be used to validate the mix design under the acceptance criteria of these specifications. Cores shall be taken at the same location where the infiltration test was conducted. The average hardened density of the cores shall be the hardened density used for the JMF. The hardened density of each core used for determining the JMF shall be within five percent of the mean value of the three cores. Core holes shall be filled by the Contractor with pervious concrete meeting the proposed JMF and shall match adjacent pavement color, texture, and grade.
7. The completed and accepted test panels shall be maintained and protected throughout the duration of the Work and may not be demolished and disposed of without written permission from the Engineer. If the test panel(s) is incorporated into the Work, it shall remain in place accepted as a single lot.

D. Manufacturer Qualifications: Manufacturer of ready-mixed concrete products who complies with ASTM C 94 requirements for production facilities and equipment.
1. Manufacturer certified according to NRMCA's "Certification of Ready Mixed Concrete Production Facilities."

E. Standard Specifications: Perform site concrete Work in compliance with the latest edition of the "Standard Specifications for Road, Bridge and Municipal Construction" prepared by Washington State Department of Transportation (WSDOT) and American Public Works Association (APWA), Washington State Chapter. Comply with the more stringent of the WSDOT Sections of Division 5, 6, and 9 or the ASTM Standards listed below.

F. Concrete Testing Service: Engage a qualified testing agency to perform material evaluation tests and to design concrete mixtures.

G. Formwork Observation: Before placing concrete, verify that installation of formwork, reinforcement, and embedded items is complete and that required inspections have been performed. Notify Owner's Representative 48 hours minimum prior to placing concrete that formwork is in place and ready for observation. Do not proceed with concrete placement prior to obtaining Owner's Representative's approval that formwork meets the lines and grades intended on the Drawings. Concrete placed without the Owner's Representative's approval of formwork shall be removed and replaced at no additional cost to the Owner.

1.05 PROJECT CONDITIONS

A. This specification section is exclusively for use at Station 57. The pavement at Station 53 consists of asphalt, for which this specification section does not apply.

B. Traffic Control: Maintain access for vehicular and pedestrian traffic as required for other construction activities. Provide barricades, cones and signs required for driveway closures and detours. See Section 1-10 of the WSDOT Standard Specifications for additional requirements.

C. Cold-Weather Protection: Do not use frozen materials or materials mixed with or coated with ice or frost.

D. Weather Limitations for Adhesive Application: Apply adhesive for tactile warning mats only when ambient temperature is above 50 deg F and when temperature has not been below 35 deg F for 12 hours immediately before application. Do not apply adhesive when substrate is wet or contains excess moisture.

PART 2 - <u>PRODUCTS</u>

2.01 FORMS

A. Form Materials: Plywood, metal, metal-framed plywood, or other approved panel-type materials to provide full-depth, continuous, straight, smooth exposed surfaces. Provide appropriate form liner material to shape the reveal patterns indicated on the Drawings.

B. Form-Release Agent: Commercially formulated form-release agent that will not bond with, stain, or adversely affect concrete surfaces and will not impair subsequent treatments of concrete surfaces.

2.02 PERMEABLE BALLAST

A. Permeable ballast shall meet the requirements of Section 9-03.9(1) for ballast except for the following special requirements:

Sieve Size	Percent Passing by Weight
2-1/2"	99-100
2"	65-100
¾"	40-80
No. 4	0-5
No. 100	0-2
% Fracture	95

B. The sand equivalent value and dust ratio requirements do not apply.

C. Los Angeles Wear, 500 Rev.: 30% maximum

D. Degradation Factor: 30 minimum

E. The fracture requirement shall be at least two (2) fractured faces and will apply to the combined aggregate retained on the No. 4 sieve in accordance with WSDOT FOP for AASHTO T 335.

F. The minimum void ratio of the aggregate shall be 30 percent as determined by AASHTO T 19.

G. Permeable ballast material may be conditionally approved based on the Contractor submitted sampled materials prior to delivery to the site. Final Acceptance will be based on conformance testing completed on material that has been delivered, installed, and compacted on site. The exact point of acceptance will be determined by the Engineer. Material out of conformance with the project specifications will be removed and replaced at the Contractor's expense.

2.03 CONCRETE MATERIALS

A. Cementitious Material: Use one of the following cementitious materials, of the same type, brand, and source throughout the Project:
   1. Portland Cement: ASTM C 150, Type I or II or I/II, gray. Supplement with the following:
      a. Fly Ash: ASTM C 618, Class C or F.
      b. Ground Granulated Blast-Furnace Slag: ASTM C 989, Grade 100 or 120.

B. Normal-Weight Aggregates: ASTM C 33, Class 4M coarse aggregate, uniformly graded. Provide aggregates from a single source.
   1. Maximum Coarse-Aggregate Size: Not exceeding 1 inch nominal.
   2. Fine Aggregate: Free of materials with deleterious reactivity to alkali in cement, when tested in accordance with ASTM C 1260.
   3. Aggregate Sizes: 3/4 to 1 inch nominal.
   4. Aggregate Sizes: 1/2-to-3/4-inch nominal.
   5. Aggregate Sizes: 3/8-to-5/8-inch nominal.

C. Water: ASTM C 94.

D. Air-Entraining Admixture: ASTM C 260.

E. Chemical Admixtures: Provide admixtures certified by manufacturer to be compatible with other admixtures and to contain no more than 0.1 percent water-soluble chloride ions by mass of cementitious material.
   1. Water-Reducing Admixture: ASTM C 494, Type A.
   2. High-Range, Water-Reducing Admixture: ASTM C 494, Type F.
   3. Hydration stabilizing admixtures shall conform to the requirements of WSDOT Standard Specifications section 9-23.6(3) or 9-23.6(5).

F. Synthetic Fibers: When used, synthetic fibers included in the mix for Portland cement concrete shall conform to the requirements of ASTM D 7508/7508M.

2.04 RELATED MATERIALS

A. Expansion Joint Filler Strips: ASTM D 3575, 1/2-inch closed-cell polyurethane foam backing, with removable joint cap, Sonneborn Sonolastic Expansion Joint Filler, or approved equal.

B. Joint Primer: ASTM C 920, Type S, Grade P, Class 25. Solvent based primer for preparing concrete surfaces for adhesion to sealant. Sonneborn Sonolastic Primer 733 or approved equal.

C. Joint Sealant: ASTM C 920, Type S, Grade P, Class 25. Non-priming, single-component, polyurethane sealant, Sonneborn Sonolastic SL1, or approved equal.

D. Backer Rod: Non-gassing, reticulated closed-cell polyethylene rod designed for use with cold-applied joint sealants where joint depth exceeds manufacturer's recommended depth for joint sealant. Comply with ASTM C 1330, Type C. Size as required for joint design. Sonneborn Sonolastic Closed-Cell Backer Rod or approved equal.

E. Bonding Agent: ASTM C 1059, Type II, non-redispersible, acrylic emulsion or styrene butadiene.

F. Curing Compounds for Non-Colored Cement Concrete: Clear, ASTM C 309, non- staining.

2.05 CONCRETE MIXTURES

A. Prepare design mixtures, proportioned according to NRMCA for pervious concrete, determined by either laboratory trial mixes or field experience.
   1. Use a qualified independent testing agency for preparing and reporting proposed concrete mixture designs for the trial batch method.

B. Proportion mixtures to provide pervious concrete with the following properties:
   1. Compressive Strength (28 Days): 2500 psi.
   2. Void content: 15 to 25% as measured by ASTM C 1688.
   3. Maximum Water-Cementitious Materials Ratio at Point of Placement: 0.35.
   4. Slump Limit: 2 inches.

C. Add air-entraining admixture at manufacturer's prescribed rate to result in concrete at point of placement having an air content of 4 to 6 percent.
D. Limit water-soluble, chloride-ion content in hardened concrete to 0.15 percent by weight of cement.
E. Chemical Admixtures: Use admixtures according to manufacturer's written instructions.
   1. Use water-reducing admixture and/or high-range, water-reducing admixture in concrete, as required, for placement and workability.
   2. Use water-reducing and retarding admixture when required by high temperatures, low humidity, or other adverse placement conditions.
F. Cementitious Materials: Limit percentage, by weight, of cementitious materials other than portland cement according to ACI 301 requirements as follows:
   1. Fly Ash or Pozzolans: 25 percent.
   2. Ground Granulated Blast-Furnace Slag: 50 percent.
   3. Combined Fly Ash or Pozzolans, and Ground Granulated Blast-Furnace Slag: 50 percent, with fly ash or Pozzolans not exceeding 25 percent.

2.06 CONCRETE MIXING

A. Equipment necessary for handling materials, mixing, delivering, and performing all parts of the Work, shall be in good repair, designed for the task, and operated by trained and qualified personnel.
B. Pervious concrete shall be centrally mixed. Batch plants for pervious concrete shall be prequalified in accordance with WSDOT Standard Specification section 6-02.3(4)A. Pervious concrete shall not be truck mixed or shrink mixed.
C. Pervious concrete shall be transported to the location by truck mixers, non-agitating trucks shall not be used for the transport of pervious concrete. The drums on mixer trucks used to transport pervious concrete shall have fins that are not excessively worn, damaged or have excessive concrete buildup. Mixer trucks shall be prequalified in accordance with WSDOT Standard Specification section 6-02.3(4)A.
D. Batch, mix and deliver pervious concrete in compliance with ASTM C94/C94M except that pervious concrete shall not be transit mixed or shrink mixed. If water is added to the mix after it is delivered on site, the fresh density for the pervious concrete shall meet the requirements of the approved JMF referenced in this section.
E. Mixing and placing concrete shall be discontinued when a descending air temperature in the shade away from artificial heat reaches 40º F and shall not be resumed until an ascending air temperature in the shade and away from artificial heat reaches 40ºF.
F. The temperature of fresh pervious concrete shall not be less than 55° F, nor more than 90°F when placed.
G. Pervious concrete shall not be mixed with aggregates having a temperature less than 32°F.

PART 3 - <u>EXECUTION</u>

3.01 EXAMINATION

A. Examine exposed subgrades and surfaces for compliance with requirements for dimensional, grading, and elevation tolerances.
B. Proceed with concrete placement operations only after nonconforming conditions have been corrected.
C. Verify that pavement is in suitable condition to begin installation of detectable warning mats in according to manufacturer's written instructions. Verify that installation of tactile warning surfacing will comply with accessibility requirements upon completion.

3.02 PREPARATION

A. Proof-roll prepared base course surface to check for unstable areas and verify need for additional compaction. Proceed with pavement only after nonconforming conditions have been corrected and subgrade is ready to receive pavement.
B. Remove loose material from compacted base course surface immediately before placing concrete.

C. Before placing permeable ballast for Porous HMA/WMA, bring the Subgrade to the required line, grade, and cross-section. Compact the Subgrade to a depth of 6 inches to at least 90 percent, but not more than 92 percent, of the maximum density as determined by the compaction control tests described in WSDOT Standard Specification section 2-03.3(14)D. All subgrades shall be firm and unyielding as determined by the Engineer.

D. Take measures to protect the prepared and approved subgrade from traffic, water run-on, standing water, or other damage. Subgrade that has been over compacted, shall be scarified to a minimum depth of eight (8) inches and recompacted.

E. Material used to protect the subgrade from traffic or provide access to adjacent facilities shall be removed and the subgrade compacted prior to placing geotextile and permeable ballast.

F. Immediately following spreading and final shaping each layer of surfacing shall be lightly compacted in one lift until no visible movement of aggregate is observed resulting in a firm and unyielding condition, as determined by the Engineer.

3.03 EDGE FORMS

A. Pervious concrete shall be placed in stationary forms. If pervious concrete is to be placed against a curb, previously placed concrete, or other existing structure, they may be used as a side form for the pervious concrete paving.

B. Forms for pervious concrete shall be made of steel or wood and shall be in good condition and shall be capable of being anchored in place so that they will be true to grade, line, and slope.

C. Forms shall be sufficiently rigid to maintain specified tolerances and capable of supporting concrete and mechanical concrete placing equipment. Forms shall be in good condition, straight, clean, free of debris, non-adherent rust, and hardened concrete.

D. Set, align, and brace forms so that the hardened pavement meets the lines, grades and slopes as shown in the drawings. Apply form-release agent to the form face, which will be in contact with concrete, immediately before placing concrete. Form release agent shall not be applied to previously placed concrete. Previously placed pavement shall be protected from damage.

E. The Contractor shall inspect all forms for line, grade, and slope. No pervious concrete shall be placed until the forms have been inspected by the Engineer.

3.04 JOINTS

A. Construct joints at the locations, depths and with horizontal dimensions indicated on plans unless noted otherwise in this section. Joints shall be of three types: construction, contraction, and isolation. Construction joints shall be formed at the end of a day's work or when necessary to stop production for any reason. Contraction joints shall be used to control random cracking. Isolation joints shall be used where the pervious concrete abuts existing facilities or where shown on the Plans.

B. Construction Joints

1. Construction joints shall be located at the location of a planned contraction or isolation joint. Construction joints are to be formed by placing a header between the forms, at right angles, to the full depth of the finished pervious concrete, and set to the height of the forms. Pervious concrete shall be placed against the header and compacted and finished as normal, including edging. The header shall remain in place until paving resumes.

C. Contraction Joints:

1. Contraction joints (transverse and longitudinal) shall be constructed at the locations and intervals shown in the Plans. Contraction joints shall be a depth of 1/3 the thickness of the pervious concrete pavement section and have a width of no more than 1/4 inch.

2. Plastic formed contraction joints shall be tooled on both sides of the joint with a radius of ½ inch. Tool joint to the depth and width in fresh concrete immediately after the concrete is compacted.

3. Contraction joints may be sawcut. Sawcutting shall occur as soon as the pervious concrete surface can be traversed without marring and when saw cutting can be performed without raveling or dislodging aggregate. Curing measures shall only be removed to the extent that saw cutting may be performed and shall be immediately replaced when the joint is cut. Slurry from saw cutting shall be vacuumed immediately with the saw cutting operation and shall not be allowed to accumulate or otherwise infiltrate or clog the pervious concrete. The minimum width of a saw cut joint shall be 1/8 inch.

D. Isolation Joints

1. Isolation joints shall be placed where the pervious concrete abuts existing structures or where shown on the Plans. Isolation joints shall continue through the depth of the pervious concrete using a 3/8 inch premolded joint filler meeting the requirements of WSDOT Standard Specifications section 9-04.1(2). Isolation joints may be formed by forming a construction joint and affixing the premolded joint filler against one side of the joint and placing fresh pervious concrete against it. Isolation joints and filler shall be flush with the surrounding pervious concrete and shall not deviate from the acceptance criteria for smoothness included within these specifications. The edge of the pervious concrete adjacent the premolded joint filler shall be hand tooled with a ½ inch radius.

3.05 CONCRETE PLACEMENT

A. Pervious concrete shall not be placed, compacted, or finished when the natural light is inadequate, unless an adequate lighting system is in operation. The adequacy of light will be determined by the Engineer.

B. Wet the surface of the subbase with water immediately before placing pervious concrete. Deposit concrete either directly from the transporting equipment or by conveyor on the subbase, unless otherwise specified. Pervious concrete shall not be placed on frozen subbase. Deposit concrete between the forms to an approximately uniform height. Spread the concrete using mechanized equipment or hand tools.

C. Strike off concrete between forms using a form-riding paving machine, roller screed, or spinning screed.

D. Compact concrete to a uniformly dense structure without clogging the surface with paste.

E. Finish the pervious concrete to a uniform, open-textured surface to match the appearance of the approved JMF test panel.

F. Edges shall be hand tooled to a radius of ¼ inch.

G. Curing materials for pervious concrete shall be in place no more than 20 minutes of discharge onto the subbase. The pavement surface and all exposed edges shall be completely covered with sheet curing materials conforming to WSDOT Standard Specification section 9-23.1. The curing material shall be secured at all exterior edges and interior laps without damaging the pervious concrete. The method of securing the curing material shall prevent wind from removing the sheet and from blowing under the sheet across the surface of the concrete. Cure the pavement continuously for a minimum of seven days.

H. All traffic (foot and vehicular), staging, stockpiling or other work shall be kept off the pervious concrete pavement during the curing period.

I. Cold Weather Work

1. When concrete is being placed and the ambient air temperature is expected to drop below 35°F during the day or night, the Contractor shall protect the concrete from freezing. The Contractor shall submit for approval a Cold Weather Plan prior to placing concrete when ambient air temperature below 35°F is anticipated, or when requested by the Engineer. When a Cold Weather Plan is required, pervious concrete shall not be placed without an approved Cold Weather Plan.

2. Under the Cold Weather Plan, the Contractor shall provide a sufficient supply of straw, hay, blankets, or other suitable blanketing material and spread it over the pavement to a sufficient depth to prevent freezing of the concrete. The blanket material shall be placed on top of the sheet curing materials and covered with a layer of burlap or plastic sheeting, weighted, or anchored to prevent the wind from displacing the insulation. At no time during the curing period shall the temperature of the pervious concrete be allowed to drop below 55°F. The Engineer may require recording thermometers if daytime temperature is below 50°F. The curing period may be extended by the Engineer if the pervious concrete temperature has been allowed to drop below 55°F.
3. The cold weather protection shall be maintained for seven days.

3.06 CONCRETE FINISHING

A. Finishing equipment for pervious concrete paving shall be designed for the intended work, shall be clean and in good operating condition.

B. Equipment used for striking off the pervious concrete shall leave a smooth surface at the planned grades and shall not cause excess paste to be left on, or drawn to, the surface. If rollers or spinning screeds are used to compact, they shall be of sufficient weight and width to compact the pervious concrete uniformly through its depth and to grade without marring the surface. Equipment used for compacting pervious concrete shall not cause the surface to close or otherwise clog and shall produce a surface that is free of ridges or other imperfections. Tools used for producing joints shall be designed and manufactured for the purpose and shall not otherwise damage or mar the surface.

C. Vibrating equipment shall not be used for placement or compaction of pervious concrete.

3.07 PAVEMENT TOLERANCES

A. Comply with tolerances of ACI 117 for driveways, roadways, ramps, sidewalks, walkways, and as follows:
1. Elevation: 1/4 inch.
2. Thickness: Plus 3/8-inch, minus 1/4 inch.
3. Surface: Gap below 10-foot long, unleveled straightedge not to exceed 1/4 inch.
4. Joint Spacing: 3 inches.
5. Contraction Joint Depth: Plus 1/4 inch, no minus.
6. Joint Width: Plus 1/8 inch, no minus.

3.08 FIELD QUALITY CONTROL

A. Testing Agency: Owner will engage a qualified independent testing and inspecting agency to perform field tests and inspections and prepare test reports.

B. Testing Services: Testing of composite samples of fresh concrete obtained according to ASTM C 172 shall be performed according to the following requirements:
1. Testing Frequency: Two (2) density tests will be conducted for every 5,000 square feet of prepared subgrade.

C. Acceptance: For acceptance, pervious concrete pavement will be divided into lots as follows: A single lot is represented by the lesser of one day’s production or 360 square yards of pervious concrete in place. Where the Contractor has more than one crew placing pervious concrete, individual lots will be associated with each crew. Representative lot size will be determined to the nearest square yard. If no sample is taken on a day, that day’s quantities may be included in the next or previous day's lot(s). The Engineer may isolate an area of pervious concrete within a lot that does not meet Contract requirements and the area will be considered a separate lot for purposes of acceptance. Lots determined in this manner shall be extended as necessary such that they are bounded by planned joints. Acceptance of a lot of pervious concrete pavement will be based on the following criteria:
1. Grade: Conform to the dimensions, lines, slopes, and grades specified on the plans. Pervious concrete pavement shall be true to planned grades and cross slopes and shall not deviate from grade more than ¼ inch in ten feet.
2. Conformance to JMF: The pervious concrete pavement used shall conform to the mix design for the JMF within the limits as set forth in WSDOT Standard Specification section 6-02.3(5)C and as determined from the accepted test panel.

3. Compacted Depth and Average Hardened Density: After a minimum of seven calendar days of curing, obtain three random core samples from each lot by removing cores in accordance with ASTM C42/C42M and measure the length of each core in accordance with ASTM C1542/1542M. No single core length shall be deficient by more than 3/4 inch of the design depth as shown on the plans. The average length of all cores from a lot shall be within minus 3/8 inch of the design depth as shown on the plans. After the length is measured, measure hardened density of each core in the lot in accordance with ASTM C1754/C1754M. The hardened density from a lot must be within +/- 5 percent of the average hardened density of the JMF (approved test panel). Core holes shall be filled by the Contractor with pervious concrete meeting the JMF and shall match adjacent pavement color, texture, and grade.
4. Infiltration Rate: The infiltration rate at any single test point shall not be less than 100 inches per hour.
5. Fresh Density: The fresh density of each lot will be measured by ASTM C1688 at the point of placement shall be within +/- five pounds per cubic foot of the fresh density determined from the JMF (approved test panel).
6. Appearance: The appearance of each lot shall be consistent with the JMF (approved test panel). The pervious concrete pavement shall have a consistent surface texture, shall not be raveled, shall be free of ridges or other surface imperfections, shall have joints that are in the specified location and are constructed per specification, and shall be free of cracks.

Testing for acceptance will be performed by the Engineer.

D. Infiltration Rate of the Placed Pavement
1. The infiltration rate of the pervious concrete shall be determined at four random locations within each lot. The locations for conducting infiltration tests will be determined by the Engineer. The Contractor shall coordinate and schedule testing with the Engineer a minimum of five Working Days in advance of the infiltration testing. The infiltration rate on the finished surface will be determined in accordance with ASTM C1701, except the infiltration ring diameter may be 12-inches to 24-inches in diameter. The infiltration test will be conducted after a minimum of seven calendar days of curing has occurred.
2. If the measured infiltration rate is less than 100 inches/hour at any test location, the Contractor may request in writing that the Engineer perform additional infiltration tests for the purpose of assessing overall infiltration performance and/or determining a defective lot. The determination of a defective lot, or lots, and the extent(s), will be determined by the Engineer. The cost of additional testing shall be the responsibility of the Contractor.

E. Rejection
1. Pervious concrete may be rejected by the Contractor for any reason at no expense to the Contracting Agency.
2. A truckload of pervious concrete will be rejected if the Certificate of Compliance is not provided at the time of delivery of the material to the site.
3. Pervious concrete that is improperly cured or is allowed to freeze during the initial seven day curing period will be rejected.
4. A lot of pervious concrete pavement that does not meet the requirements of these specifications will be rejected.
5. During the removal process of the rejected pavement, the Contractor shall implement measures to protect the adjacent pervious concrete pavement to remain. If pervious concrete pavement becomes damaged by the Contractor during removal of the rejected pavement, then additional pavement areas may be rejected by the Engineer to the next planned joint.
6. Fresh pervious concrete that has been rejected by the Engineer, or the Contractor, shall not be placed, or shall be removed and replaced, at no additional cost.

3.09 REPAIRS AND PROTECTION

A. As part of the Construction Stormwater Pollution Prevention plan (SWPPP), rain runoff, surface water of any kind and sediment shall be prevented from entering the area of pervious concrete construction, including excavation, until the pervious concrete application has cured, testing is completed and determined to meet specifications, and the adjacent areas that sheet flow/drain onto the pervious concrete are permanently stabilized from erosion and/or plantings are established. Once pavement is placed, flow diversion measures and protective covers shall continually be maintained until adjacent areas are permanently stabilized and concrete has been accepted. Construction vehicular traffic shall not be allowed onto the pervious concrete pavement.

B. The pavement may be opened to vehicular traffic after the pervious concrete has cured for at least seven uninterrupted days, all testing has been completed, and the pavement has been accepted by the Engineer.

C. The Contractor shall take every precaution to protect the pervious concrete pavement from damage, including the introduction of foreign materials to the surface, throughout the course of the work. Pervious concrete pavement that is damaged or has been adversely impacted by the introduction of foreign materials shall be remediated to the satisfaction of the Engineer or rejected and replaced to the nearest joint.

D. Remove and replace concrete that is broken, damaged, or defective or that does not comply with requirements in this Section at no additional cost to the Owner.

3.10 CLEANING

A. Remove all excess material, debris, and equipment from site upon completion of work in this Section. Keep the work area clean and in an orderly condition during the Work.

B. Do not dispose of waste concrete or wash out materials on the site unless otherwise directed by the Owner’s Representative. Areas to be paved may be acceptable for concrete truck wash areas only as approved by the Owner’s Representative.

END OF SECTION

SECTION 329113 – SOIL PREPARATION

PART 1 - GENERAL

1.1 RELATED DOCUMENTS

A. Drawings and general provisions of the Contract, including General and Supplementary Conditions and Division 01 Specification Sections, apply to this Section.

1.2 SUMMARY

A. Section includes planting soils specified by composition of the mixes.

B. Related Requirements:

1. Section 323300 "Site Furnishings" for placing planting soil in exterior unit planters.
2. Section 311000 "Site Clearing" for topsoil stripping and stockpiling.
3. Section 329200 "Turf and Grasses" for placing planting soil for turf and grasses.
4. Section 329300 "Plants" for placing planting soil for plantings.

1.3 DEFINITIONS

A. AAPFCO: Association of American Plant Food Control Officials.

B. Backfill: The earth used to replace or the act of replacing earth in an excavation. This can be amended or unamended soil as indicated.

C. CEC: Cation exchange capacity.

D. Compost: The product resulting from the controlled biological decomposition of organic material that has been sanitized through the generation of heat and stabilized to the point that it is beneficial to plant growth.

E. Duff Layer: A surface layer of soil, typical of forested areas, that is composed of mostly decayed leaves, twigs, and detritus.

F. Imported Soil: Soil that is transported to Project site for use.

G. Layered Soil Assembly: A designed series of planting soils, layered on each other, that together produce an environment for plant growth.

H. Manufactured Soil: Soil produced by blending soils, sand, stabilized organic soil amendments, and other materials to produce planting soil.

I. NAPT: North American Proficiency Testing Program. An SSSA program to assist soil-, plant-, and water-testing laboratories through interlaboratory sample exchanges and statistical evaluation of analytical data.

J. Organic Matter: The total of organic materials in soil exclusive of undecayed plant and animal tissues, their partial decomposition products, and the soil biomass; also called "humus" or "soil organic matter."

K. Planting Soil: Existing, on-site soil; imported soil; or manufactured soil that has been modified as specified with soil amendments and perhaps fertilizers to produce a soil mixture best for plant growth.

L. RCRA Metals: Hazardous metals identified by the EPA under the Resource Conservation and Recovery Act.

M. SSSA: Soil Science Society of America.

N. Subgrade: Surface or elevation of subsoil remaining after excavation is complete, or the top surface of a fill or backfill before planting soil is placed.

O. Subsoil: Soil beneath the level of subgrade; soil beneath the topsoil layers of a naturally occurring soil profile, typified by less than 1 percent organic matter and few soil organisms.

P. Surface Soil: Soil that is present at the top layer of the existing soil profile. In undisturbed areas, surface soil is typically called "topsoil"; but in disturbed areas such as urban environments, the surface soil can be subsoil.
Q. USCC: U.S. Composting Council.

1.4 PREINSTALLATION MEETINGS
A. Preinstallation Conference: Conduct conference at Project site or other approved location.
1. Meeting to include Owner's Representative, Project Engineer and Architect unless otherwise arraigned by attendees.
2. Draft meeting minutes and send electronic copy to Owner's Representative, Project Engineer and Architect within one week of preinstallation conference meeting.

1.5 ACTION SUBMITTALS
A. Product Data: For each type of product.
1. Include recommendations for application and use.
2. Include test data substantiating that products comply with requirements.
3. Include sieve analyses for aggregate materials.
4. Material Certificates: For each type of imported soil, compost, soil amendment and fertilizer before delivery to the site, according to the following:
a. Manufacturer's qualified testing agency's certified analysis of standard products.
b. Analysis of fertilizers, by a qualified testing agency, made according to AAPFCO methods for testing and labeling and according to AAPFCO's SUIP #25.
c. Analysis of nonstandard materials, by a qualified testing agency, made according to SSSA methods, where applicable.
B. Samples: For each bulk-supplied material, supply a minimum one quart volume of each in sealed containers labeled with content, source, and date obtained. Each Sample shall be typical of the lot of material to be furnished; provide an accurate representation of composition, color, and texture.

1.6 INFORMATIONAL SUBMITTALS
A. Qualification Data: For each testing agency.
B. Preconstruction Test Reports.
C. Field quality-control reports.

1.7 QUALITY ASSURANCE
A. Testing Agency Qualifications: Utilize an independent, state-operated, or university-operated laboratory; experienced in soil science, soil testing, and plant nutrition; with the experience and capability to conduct the testing indicated; and that specializes in types of tests to be performed.
1. Multiple Laboratories: At Contractor's option, work may be divided among qualified testing laboratories specializing in physical testing, chemical testing, and fertility testing.
2. Soil testing costs and coordination are to be by the contractor.

1.8 PRECONSTRUCTION TESTING
A. Preconstruction Testing Service: Engage a qualified testing agency to perform preconstruction soil analyses on anticipated import topsoil mixture.
B. Preconstruction Soil Analyses: For each unamended soil type, perform testing on soil samples and furnish soil analysis and a written report containing soil-amendment and fertilizer recommendations by a qualified testing agency.
1. Have testing agency identify and label samples and test reports according to sample collection and labeling requirements.

1.9 SOIL-SAMPLING REQUIREMENTS
A. General: Extract soil samples according to requirements in this article.

B. Sample Collection and Labeling: Have samples taken and labeled by Contractor under the direction of the testing agency.
   1. Number and Location of Samples: Minimum of three representative soil samples from varied locations for each soil to be used or amended for landscaping purposes.
   2. Provide a minimum volume of one quart for each sample to be tested properly bagged, sealed and labeled.
   3. Division of Samples: Split each sample into two, equal parts. Send half to the testing agency and half to Owner for its records.
   4. Labeling: Label each sample with the date, location keyed to a site plan or other location system, visible soil condition, and sampling depth.

1.10 TESTING REQUIREMENTS

A. General: Perform tests on soil samples according to requirements in this article.

B. Physical Testing:
   1. Soil Texture: Soil-particle, size-distribution analysis
   2. Total Porosity: Calculate using particle density and bulk density according to SSSA's "Methods of Soil Analysis - Part 1-Physical and Mineralogical Methods."
   3. Water Retention: According to SSSA's "Methods of Soil Analysis - Part 1-Physical and Mineralogical Methods."
   4. Saturated Hydraulic Conductivity: According to SSSA's "Methods of Soil Analysis - Part 1-Physical and Mineralogical Methods"; at 85% compaction according to ASTM D698 (Standard Proctor).

C. Chemical Testing:
   1. CEC: Analysis by sodium saturation at pH 7 according to SSSA's "Methods of Soil Analysis - Part 3- Chemical Methods."
   2. Clay Mineralogy: Analysis and estimated percentage of expandable clay minerals using CEC by ammonium saturation at pH 7 according to SSSA's "Methods of Soil Analysis - Part 1- Physical and Mineralogical Methods."
   3. Metals Hazardous to Human Health: Test for presence and quantities of RCRA metals including aluminum, arsenic, barium, copper, cadmium, chromium, cobalt, lead, lithium, and vanadium. If RCRA metals are present, include recommendations for corrective action.
   4. Phytotoxicity: Test for plant-available concentrations of phytotoxic minerals including aluminum, arsenic, barium, cadmium, chlorides, chromium, cobalt, copper, lead, lithium, mercury, nickel, selenium, silver, sodium, strontium, tin, titanium, vanadium, and zinc.

D. Fertility Testing: Soil-fertility analysis according to standard laboratory protocol of SSSA NAPT NEC-67. including the following:
   1. Percentage of organic matter.
   2. CEC, calcium percent of CEC, and magnesium percent of CEC.
   3. Soil reaction (acidity/alkalinity pH value).
   4. Buffered acidity or alkalinity.
   5. Nitrogen ppm.
   6. Phosphorous ppm.
   7. Potassium ppm.
   8. Manganese ppm.
   9. Manganese-availability ppm.
   10. Zinc ppm.
   11. Zinc availability ppm.
   12. Copper ppm.

13. Sodium ppm
14. Soluble-salts ppm.
15. Presence and quantities of problem materials including salts and metals cited in the Standard protocol. If such problem materials are present, provide additional recommendations for corrective action.
16. Other deleterious materials, including their characteristics and content of each.

E. Organic-Matter Content: Analysis using loss-by-ignition method according to SSSA's "Methods of Soil Analysis - Part 3- Chemical Methods."

F. Recommendations: Based on the test results, state recommendations for soil treatments and soil amendments to be incorporated to produce satisfactory planting soil suitable for healthy, viable plants indicated. Include, at a minimum, recommendations for nitrogen, phosphorous, and potassium fertilization, and for micronutrients.

1. Fertilizers and Soil Amendment Rates: State recommendations in weight per 1000 sq.ft. for 6 inch depth of soil.
2. Soil Reaction: State the recommended liming rates for raising pH or sulfur for lowering pH according to the buffered acidity or buffered alkalinity in weight per 1000 sq.ft. for 6 inch depth of soil.

1.11 DELIVERY, STORAGE, AND HANDLING

A. Packaged Materials: Deliver packaged materials in original, unopened containers showing weight, certified analysis, name and address of manufacturer, and compliance with state and Federal laws if applicable.

B. Bulk Materials:

1. Do not dump or store bulk materials near structures, utilities, walkways and pavements, or on existing turf areas or plants.
2. Provide erosion-control measures to prevent erosion or displacement of bulk materials, discharge of soil-bearing water runoff, and airborne dust reaching adjacent properties, water conveyance systems, or walkways.
3. Do not move or handle materials when they are wet or frozen.
4. Accompany each delivery of bulk fertilizers and soil amendments with appropriate certificates.

PART 2 - PRODUCTS

2.1 PLANTING SOILS SPECIFIED BY COMPOSITION

A. General: Soil amendments, fertilizers, and rates of application specified in this article are guidelines that may need revision based on testing laboratory's recommendations after preconstruction soil analyses are performed.

B. Planting-Soil Type: Imported 3-Way topsoil naturally formed soil from a reputable off-site topsoil supplier modified to produce viable planting soil per soil testing results.

1. Unacceptable Properties: Clean soil of the following:
   a. Unacceptable Materials: Concrete slurry, concrete layers or chunks, cement, plaster, building debris, oils, gasoline, diesel fuel, paint thinner, turpentine, tar, roofing compound, acid, and other extraneous materials that are harmful to plant growth.
   b. Unsuitable Materials: Stones, roots, plants, sod, clay lumps, and pockets of coarse sand that exceed a combined maximum of 8percent by dry weight of the imported soil.
   c. Large Materials: Stones, clods, roots, clay lumps, and pockets of coarse sand exceeding 1.5 inches in any dimension.

2. Amended Soil Composition: Blend imported, unamended soil per recommendations of soil testing report at no additional cost to owner.

2.2 INORGANIC SOIL AMENDMENTS

A. Lime: ASTM C602, agricultural liming material containing a minimum of 80 percent calcium carbonate equivalent and as follows:
   1. Class: T, with a minimum of 99 percent passing through a No. 8 sieve and a minimum of 75 percent passing through a No. 60 sieve.
   2. Class: O, with a minimum of 95 percent passing through a No. 8 sieve and a minimum of 55 percent passing through a No. 60 sieve.
   3. Form: Provide lime in form of ground dolomitic limestone
B. Sulfur: Granular, biodegradable, and containing a minimum of 90 percent elemental sulfur, with a minimum of 99 percent passing through a No. 6 sieve and a maximum of 10 percent passing through a No. 40 sieve.
C. Iron Sulfate: Granulated ferrous sulfate containing a minimum of 20 percent iron and 10 percent sulfur.
D. Perlite: Horticultural perlite, soil amendment grade.
E. Agricultural Gypsum: Minimum 90 percent calcium sulfate, finely ground with 90 percent passing through a No. 50 sieve.
F. Sand: Clean, washed, natural or manufactured, free of toxic materials, and according to ASTM C33/C33M.

2.3 ORGANIC SOIL AMENDMENTS

A. Compost: Well-composted, stable, and weed-free organic matter
   1. Reaction: pH of 5.5 to 8
   2. Soluble-Salt Concentration: Less than 4 dS/m.
   3. Moisture Content: 35-55 percent by weight.
   4. Organic-Matter Content: 40-50 percent of dry weight.
   5. Particle Size: Minimum of 98 percent passing through a 2-inch sieve.
B. Sphagnum Peat: Partially decomposed sphagnum peat moss, finely divided or of granular texture with 100 percent passing through a 1/2-inch sieve, a pH of 3.4 to 4.8, and a soluble-salt content measured by electrical conductivity of maximum 5 dS/m.
C. Muck Peat: Partially decomposed moss peat, native peat, or reed-sedge peat, finely divided or of granular texture with 100 percent passing through a 1/2-inch sieve, a pH of 6 to 7.5, a soluble-salt content measured by electrical conductivity of maximum 5 dS/m, having a water-absorbing capacity of 1100 to 2000 percent, and containing no sand.
D. Wood Derivatives: Shredded and composted, nitrogen-treated sawdust, ground bark, or wood waste; of uniform texture and free of chips, stones, sticks, soil, or toxic materials.
   1. Partially Decomposed Wood Derivatives: In lieu of shredded and composted wood derivatives, mix shredded and partially decomposed wood derivatives with ammonium nitrate at a minimum rate of 0.15 lb/cu. ft. of loose sawdust or ground bark, or with ammonium sulfate at a minimum rate of 0.25 lb/cu. ft. of loose sawdust or ground bark.
E. Manure: Well-rotted, unleached, stable or cattle manure containing not more than 25 percent by volume of straw, sawdust, or other bedding materials; free of toxic substances, stones, sticks, soil, weed seed, debris, and material harmful to plant growth.

2.4 FERTILIZERS

A. Superphosphate: Commercial, phosphate mixture, soluble; a minimum of 33 percent available phosphoric acid.

B. Commercial Fertilizer: Commercial-grade complete fertilizer of neutral character, consisting of fast- and slow-release nitrogen, 50 percent derived from natural organic sources of urea formaldehyde, phosphorous, and potassium in the following composition:
   1. Composition: 1 lb/1000 sq. ft. of actual nitrogen, 4 percent phosphorous, and 2 percent potassium, by weight.
   2. Composition: Nitrogen, phosphorous, and potassium in amounts recommended in soil reports from a qualified testing agency.
C. Slow-Release Fertilizer: Granular or pelleted fertilizer consisting of 50 percent water-insoluble nitrogen, phosphorus, and potassium in the following composition:
   1. Composition: 20 percent nitrogen, 10 percent phosphorous, and 10 percent potassium, by weight.
   2. Composition: Nitrogen, phosphorous, and potassium in amounts recommended in soil reports from a qualified testing agency.
D. Chelated Iron: Commercial-grade FeEDDHA for dicots and woody plants, and commercial-grade FeDTPA for ornamental grasses and monocots.

PART 3 - <u>EXECUTION</u>

3.1 GENERAL
   A. Place planting soil and fertilizers according to requirements in other Specification Sections.
   B. Verify that no foreign or deleterious material or liquid such as paint, paint washout, concrete slurry, concrete layers or chunks, cement, plaster, oils, gasoline, diesel fuel, paint thinner, turpentine, tar, roofing compound, or acid has been deposited in planting soil.
   C. Proceed with placement only after unsatisfactory conditions have been corrected.

3.2 PREPARATION OF UNAMENDED, ON-SITE SOIL BEFORE AMENDING
   A. Excavation: Excavate soil from designated area(s) in plans to a depth of 6 inches for lawns and 9 inches for planting bed areas or as required to achieve a -½ inch final elevation to adjacent hardscape surfaces with proper drainage.
   B. Unacceptable Materials: Clean soil of concrete slurry, concrete layers or chunks, cement, plaster, building debris, oils, gasoline, diesel fuel, paint thinner, turpentine, tar, roofing compound, acid, and other extraneous materials that are harmful to plant growth.
   C. Unsuitable Materials: Clean soil to contain a maximum of 8 percent by dry weight of stones, roots, plants, sod, clay lumps, and pockets of coarse sand.
   D. Screening: Pass unamended soil through a 2 inch sieve to remove large materials.

3.3 PLACING MANUFACTURED PLANTING SOIL OVER EXPOSED SUBGRADE
   A. General: Apply and mix unamended soil with amendments on-site to produce required planting soil. Do not apply materials or till if existing soil or subgrade is frozen, muddy, or excessively wet.
   B. Subgrade Preparation: Till subgrade to a minimum depth of 4 inches. Remove stones larger than 1-1/2 inches in any dimension and sticks, roots, rubbish, and other extraneous matter and legally dispose of them off Owner's property.
      1. Apply, add soil amendments, and mix approximately half the thickness of unamended soil over prepared, loosened subgrade according to "Mixing" Paragraph below. Mix thoroughly into top 4” of subgrade. Spread remainder of planting soil.
   C. Mixing: Spread unamended soil to total depths indicated on Drawings but not less than required to meet finish grades after mixing with amendments and natural settlement. Do not spread if soil or subgrade is frozen, muddy, or excessively wet.
      1. Amendments: Apply soil amendments except compost, and fertilizer, if required, evenly on surface, and thoroughly blend them with unamended soil to produce planting soil.
         a. Mix lime and sulfur where required with dry soil before mixing fertilizer.

b. Mix fertilizer with planting soil no more than seven days before planting.

2. Lifts: Apply and mix unamended soil and amendments in lifts not exceeding 9 inches in loose depth for material compacted by compaction equipment, and not more than 4 inch in loose depth for material compacted by hand-operated tampers.

D. Compaction: Compact each blended lift of planting soil to 75-82 percent of maximum Standard Proctor density according to ASTM D698 and tested in-place.

E. Finish Grading: Grade planting soil to a smooth, uniform surface plane with loose, uniformly fine texture. Roll and rake, remove ridges, and fill depressions to meet finish grades.

3.4 APPLYING COMPOST TO SURFACE OF PLANTING SOIL

A. Application: Apply compost per depths indicated in the plans to surface of in-place planting soil. Do not apply materials or till if existing soil or subgrade is frozen, muddy, or excessively wet.

B. Finish Grading: Grade surface to a smooth, uniform surface plane with loose, uniformly fine texture. Roll and rake, remove ridges, and fill depressions to meet finish grades.

3.5 PROTECTION

A. Protection Zone: Identify protection zones according to Section 015639 "Temporary Tree and Plant Protection."

B. Protect areas of in-place soil from additional compaction, disturbance, and contamination. Prohibit the following practices within these areas except as required to perform planting operations:

1. Storage of construction materials, debris, or excavated material.
2. Parking vehicles or equipment.
3. Vehicle traffic.
4. Foot traffic.
5. Erection of sheds or structures.
6. Impoundment of water.
7. Utilities install (except where required)
8. Excavation or other digging unless otherwise indicated.

C. If planting soil or subgrade is overcompacted, disturbed, or contaminated by foreign or deleterious materials or liquids, remove the planting soil and contamination; restore the subgrade as directed by Architect and replace contaminated planting soil with new planting soil.

3.6 CLEANING

A. Protect areas adjacent to planting-soil preparation and placement areas from contamination. Keep adjacent paving and construction clean and work area in an orderly condition.

B. Remove surplus soil and waste material including excess subsoil, unsuitable materials, trash, and debris and legally dispose of them off Owner's property unless otherwise indicated.

1. Dispose of excess subsoil and unsuitable materials on-site where directed by Owner.

END OF SECTION

SECTION 329200 - TURF AND GRASSES

PART 1 - GENERAL

1.1 RELATED DOCUMENTS

A. Drawings and general provisions of the Contract, including General and Supplementary Conditions and Division 01 Specification Sections, apply to this Section.

1.2 SUMMARY

A. Section Includes: Seeding, Hydroseeding, Sodding, Plugging, Sprigging, Turf renovation, Erosion-control materials.

B. Related Requirements:

1. Section 329300 "Plants" for trees, shrubs, ground covers, and other plants as well as border edgings and mow strips.

1.3 DEFINITIONS

A. Finish Grade: Elevation of finished surface of planting soil.

B. Pesticide: A substance or mixture intended for preventing, destroying, repelling, or mitigating a pest. Pesticides include insecticides, miticides, herbicides, fungicides, rodenticides, and molluscicides. They also include substances or mixtures intended for use as a plant regulator, defoliant, or desiccant.

C. Pests: Living organisms that occur where they are not desired or that cause damage to plants, animals, or people. Pests include insects, mites, grubs, mollusks (snails and slugs), rodents (gophers, moles, and mice), unwanted plants (weeds), fungi, bacteria, and viruses.

D. Planting Soil: Existing, on-site soil; imported soil; or manufactured soil that has been modified with soil amendments and perhaps fertilizers to produce a soil mixture best for plant growth. See Section 329113 Soil Preparation and drawing designations for planting soils.

E. Subgrade: The surface or elevation of subsoil remaining after excavation is complete, or the top surface of a fill or backfill before planting soil is placed.Insert other definitions if required to support planting requirements indicated on Drawings.

1.4 PREINSTALLATION MEETINGS

A. Preinstallation Conference: Conduct conference at Project site or other agreed upon location.

B. Conduct with owner’s representative, project engineer and architect prior to commencing construction activities.

C. Contractor to send electronic meeting minute summary of pre-installation conference to all attendees within one week of meeting conclusion.

1.5 INFORMATIONAL SUBMITTALS

A. Qualification Data: For landscape Installer.

B. Certification of Grass Seed: From seed vendor for each grass-seed monostand or mixture, stating the botanical and common name, percentage by weight of each species and variety, and percentage of purity, germination, and weed seed. Include the year of production and date of packaging.

1. Certification of seed mixture for turfgrass sod. Include identification of source and name and telephone number of supplier.

C. Product Certificates: For fertilizers, from manufacturer.

D. Pesticides and Herbicides: Product label and manufacturer's application instructions specific to Project.

1.6 CLOSEOUT SUBMITTALS

A. Maintenance Data: Recommended procedures to be established by Owner for maintenance of turf during a calendar year. Submit before expiration of required maintenance periods. See Irrigation Section 328400 and other sections for additional requirements.

1.7 QUALITY ASSURANCE

A. Installer Qualifications: A qualified landscape installer whose work has resulted in successful turf establishment.
   1. Experience: Five years' experience in turf installation in addition to requirements in Section 014000 Quality Requirements.
   2. Installer's Field Supervision: Require Installer to maintain an experienced full-time supervisor on Project site when work is in progress.
   3. Pesticide Applicator: State licensed, commercial.

1.8 DELIVERY, STORAGE, AND HANDLING

A. Seed and Other Packaged Materials: Deliver packaged materials in original, unopened containers showing weight, certified analysis, name and address of manufacturer, and indication of compliance with state and Federal laws, as applicable.

B. Sod: Harvest, deliver, store, and handle sod according to requirements in "Specifications for Turfgrass Sod Materials" and "Specifications for Turfgrass Sod Transplanting and Installation" sections in TPI's "Guideline Specifications to Turfgrass Sodding." Deliver sod within 24 hours of harvesting and in time for planting promptly. Protect sod from breakage and drying.

C. Bulk Materials:
   1. Do not dump or store bulk materials near structures, utilities, walkways and pavements, or on existing turf areas or plants.
   2. Provide erosion-control measures to prevent erosion or displacement of bulk materials; discharge of soil-bearing water runoff; and airborne dust reaching adjacent properties, water conveyance systems, or walkways.
   3. Accompany each delivery of bulk materials with appropriate certificates.

1.9 FIELD CONDITIONS

A. Seeding Restrictions: Contractor to apply hydroseed for fine lawn areas between April 1st and October 1st. If hydroseeding is applied after these dates contractor to apply an additional re-spray of fine lawns areas with the same hydroseed mixture, at the same rate as required by owner in the specified seeding window.

B. Weather Limitations: Proceed with planting only when existing and forecasted weather conditions permit planting to be performed when beneficial and optimum results may be obtained. Apply products during favorable weather conditions according to manufacturer's written instructions.

PART 2 - <u>PRODUCTS</u>

2.1 SEED

A. Grass Seed: Fresh, clean, dry, new-crop seed complying with AOSA's "Rules for Testing Seeds" for purity and germination tolerances.

B. Seed Species:
   1. Quality, State Certified: State-certified seed of grass species as listed below for solar exposure.
   2. Quality, Non-State Certified: Seed of grass species as listed below for solar exposure, with not less than 85 percent germination, not less than 95 percent pure seed, and not more than .3 percent weed seed
   3. Provide hydroseeding type and rate per contract documents.

4. Provide owner's representative with supplier name, location, hydroseed mixture and application rate to be applied a minimum one week before install date.

2.2 TURFGRASS HYDROSEED LAWN

A. Hydroseed Lawn: Provide Country Green Turf Farms (800-300-1763) Perfect Sod Seed Mixture or approved equal.

2.3 FERTILIZERS

A. Commercial Fertilizer: Commercial-grade complete fertilizer of neutral character, consisting of fast- and slow-release nitrogen, 50 percent derived from natural organic sources of urea formaldehyde, phosphorous, and potassium in the following composition:
   1. Composition:
      a. 1 lb/1000 sq. ft. of actual nitrogen, 4 percent phosphorous, and 2 percent potassium, by weight.
      b. Nitrogen, phosphorous, and potassium in amounts recommended in soil reports from a qualified soil-testing laboratory.

B. Slow-Release Fertilizer: Granular or pelleted fertilizer consisting of 50 percent water-insoluble nitrogen, phosphorus, and potassium in the following composition:
   1. Composition:
      a. 20 percent nitrogen, 10 percent phosphorous, and 10 percent potassium, by weight.
      b. Nitrogen, phosphorous, and potassium in amounts recommended in soil reports from a qualified soil-testing laboratory.

2.4 MULCHES

A. Straw Mulch: Provide air-dry, clean, mildew- and seed-free, salt hay or threshed straw of wheat, rye, oats, or barley.

B. Sphagnum Peat Mulch: Partially decomposed sphagnum peat moss, finely divided or of granular texture, and with a pH range of 3.4 to 4.8.

C. Muck Peat Mulch: Partially decomposed moss peat, native peat, or reed-sedge peat, finely divided or of granular texture, with a pH range of 6 to 7.5, and having a water-absorbing capacity of 1100 to 2000 percent, and containing no sand.

D. Compost Mulch: Well-composted, stable, and weed-free organic matter, pH range of 5.5 to 8; moisture content 35 to 55 percent by weight; 100 percent passing through 1-inch sieve; soluble salt content of 2 to 5 decisiemens/m; not exceeding 0.5 percent inert contaminants and free of substances toxic to plantings; and as follows:
   1. Organic Matter Content: 50 to 60 percent of dry weight.
   2. Feedstock: Agricultural, food, or industrial residuals; biosolids; yard trimmings; or source-separated or compostable mixed solid waste.
   3. Fiber Mulch: Biodegradable, dyed-wood, cellulose-fiber mulch; nontoxic and free of plant-growth or germination inhibitors; with a maximum moisture content of 15 percent and a pH range of 4.5 to 6.5.
   4. Nonasphaltic Tackifier: Colloidal tackifier recommended by fiber-mulch manufacturer for slurry application; nontoxic and free of plant-growth or germination inhibitors.
   5. Asphalt Emulsion: ASTM D977, Grade SS-1; nontoxic and free of plant-growth or germination inhibitors.

2.5 PESTICIDES

A. General: Pesticide, registered and approved by the EPA, acceptable to authorities having jurisdiction, and of type recommended by manufacturer for each specific problem and as required for Project conditions and application. Do not use restricted pesticides unless authorized in writing by authorities having jurisdiction.

B. Pre-Emergent Herbicide (Selective and Nonselective): Effective for controlling the germination or growth of weeds within planted areas at the soil level directly below the mulch layer.

C. Post-Emergent Herbicide (Selective and Nonselective): Effective for controlling weed growth that has already germinated.

2.6 EROSION-CONTROL MATERIALS

A. Erosion-Control Blankets: Biodegradable wood excelsior, straw, or coconut-fiber mat enclosed in a photodegradable plastic mesh. Include manufacturer's recommended steel wire staples, 6 inches long.

B. Erosion-Control Fiber Mesh: Biodegradable burlap or spun-coir mesh, a minimum of 0.92 lb/sq. yd., with 50 to 65 percent open area. Include manufacturer's recommended steel wire staples, 6 inches long.

C. Erosion-Control Mats: Cellular, nonbiodegradable slope-stabilization mats designed to isolate and contain small areas of soil over steeply sloped surface, of 4-inch nominal mat thickness. Include manufacturer's recommended anchorage system for slope conditions.

PART 3 - <u>EXECUTION</u>

3.1 EXAMINATION

A. Examine areas to be planted for compliance with requirements and other conditions affecting installation and performance of the Work.

1. Verify that no foreign or deleterious material or liquid such as paint, paint washout, concrete slurry, concrete layers or chunks, cement, plaster, oils, gasoline, diesel fuel, paint thinner, turpentine, tar, roofing compound, or acid has been deposited in soil within a planting area. Notify owner’s representative if these items or conditions are found.
2. Suspend planting operations during periods of excessive soil moisture until the moisture content reaches acceptable levels to attain the required results.
3. Uniformly moisten excessively dry soil that is not workable or which is dusty.

B. Proceed with installation only after unsatisfactory conditions have been corrected and with approval of owner’s representative.

C. If contamination by foreign or deleterious material or liquid is present in soil within a planting area, remove the soil and contamination as directed by Architect and replace with new planting soil.

3.2 PREPARATION

A. Protect structures; utilities; sidewalks; pavements; and other facilities, trees, shrubs, and plantings from damage caused by planting operations.

1. Protect adjacent and adjoining areas from hydroseeding and hydromulching overspray.
2. Protect grade stakes set by others until directed to remove them.

B. Install erosion-control measures to prevent erosion or displacement of soils and discharge of soil-bearing water runoff or airborne dust to adjacent properties and walkways.

3.3 TURF AREA PREPARATION

A. General: Prepare planting area for soil placement and mix planting soil according to Section 329113 Soil Preparation.

B. Placing Planting Soil: Place manufactured planting soil over amended subgrade

1. Reduce elevation of planting soil to allow for soil thickness of sod.

C. Moisten prepared area before planting if soil is dry. Water thoroughly and allow surface to dry before planting. Do not create muddy soil.

D. Before planting, obtain Architect's acceptance of finish grading; restore planting areas if eroded or otherwise disturbed after finish grading.

3.4 PREPARATION FOR EROSION-CONTROL MATERIALS

A. For erosion-control mats, install planting soil in two lifts, with second lift equal to thickness of erosion-control mats. Install erosion-control mat and fasten as recommended by material manufacturer.

B. Fill cells of erosion-control mat with planting soil and compact before planting.
C. For erosion-control blanket or mesh, install from top of slope, working downward, and as recommended by material manufacturer for site conditions. Fasten as recommended by material manufacturer.
D. Moisten prepared area before planting if surface is dry. Water thoroughly and allow surface to dry before planting. Do not create muddy soil.

3.5 SEEDING

A. Sow seed with spreader or seeding machine. Do not broadcast or drop seed when wind velocity exceeds 8 mph.
   1. Evenly distribute seed by sowing equal quantities in two directions at right angles to each other.
   2. Do not use wet seed or seed that is moldy or otherwise damaged.
   3. Do not seed against existing trees. Limit extent of seed to outside edge of planting saucer.
B. Sow seed at manufacturer’s recommended rate(s).
C. Rake seed lightly into top 1/8 inch of soil, roll lightly, and water with fine spray.
D. Protect seeded areas with slopes at or exceeding 1:3 with erosion-control blankets installed and stapled according to manufacturer's written instructions.
E. Protect seeded areas with erosion-control mats where indicated on Drawings; install and anchor according to manufacturer's written instructions.
F. Protect seeded areas with slopes not exceeding 1:6 by spreading straw mulch. Spread uniformly at a minimum rate of 2 tons/acre to form a continuous blanket of 1-1/2 inches in loose thickness over seeded areas. Spread by hand, blower, or other suitable equipment.
   1. Anchor straw mulch by crimping into soil with suitable mechanical equipment.
   2. Bond straw mulch by spraying with asphalt emulsion at a rate of 10 to 13 gal./1000 sq. ft. Take precautions to prevent damage or staining of structures or other plantings adjacent to mulched areas. Immediately clean damaged or stained areas.
G. Protect seeded areas from hot (over 85 degrees), dry weather or drying winds by applying planting soil within 24 hours after completing seeding operations. Soak areas, scatter mulch uniformly to a thickness of 3/16 inch and roll surface smooth.

3.6 HYDROSEEDING

A. Hydroseeding: Mix specified seed, commercial fertilizer slow-release fertilizer and fiber mulch in water, using equipment specifically designed for hydroseed application. Continue mixing until uniformly blended into homogeneous slurry suitable for hydraulic application.
   1. Mix slurry with fiber-mulch and manufacturer's recommended tackifier.
   2. Spray-apply slurry uniformly to all areas to be seeded in a one-step process. Apply slurry at a rate so that mulch component is deposited at not less than 1500-lb/acre dry weight, and seed component is deposited at not less than the specified seed-sowing rate.
   3. Spray-apply slurry uniformly to all areas to be seeded in a two-step process. Apply first slurry coat at a rate so that mulch component is deposited at not less than 500-lb/acre dry weight, and seed component is deposited at not less than the specified seed-sowing rate. Apply slurry cover coat of fiber mulch (hydromulching) at a rate of 1000 lb/acre.
   4. Apply hydroseed mixture(s) per rates recommended by manufacture.

3.7 SODDING

A. Lay sod within 24 hours of harvesting unless a suitable preservation method is accepted by Architect prior to delivery time. Do not lay sod if dormant or if ground is frozen or muddy.
B. Lay sod to form a solid mass with tightly fitted joints. Butt ends and sides of sod; do not stretch or overlap. Stagger sod strips or pads to offset joints in adjacent courses. Avoid damage to soil or sod during installation. Tamp and roll lightly to ensure contact with soil, eliminate air pockets,

and form a smooth surface. Work sifted soil or fine sand into minor cracks between pieces of sod; remove excess to avoid smothering sod and adjacent grass.

1. Lay sod across slopes exceeding 1:3.
2. Retain subparagraph below if required. Steel staple anchors are commonly used.
3. Anchor sod on slopes exceeding 1:6 with wood pegs or steel staples spaced as recommended by sod manufacturer but not less than two anchors per sod strip to prevent slippage.

C. Saturate sod with fine water spray within two hours of planting. During first week after planting, water daily or more frequently as necessary to maintain moist soil to a minimum depth of 1-1/2 inches below sod.

3.8 PLUGGING

A. Plant plugs in holes or furrows, spaced 12 inches apart in both directions. On slopes, contour furrows to near level.

3.9 TURF RENOVATION

A. Renovate existing turf where indicated.
   1. Renovate turf damaged by Contractor's operations, such as storage of materials or equipment and movement of vehicles.
   2. Reestablish turf where settlement or washouts occur or where minor regrading is required.
B. Install and grade new planting soil as required.
C. Remove sod and vegetation from diseased or unsatisfactory turf areas; do not bury in soil.
D. Remove topsoil containing foreign materials, such as oil drippings, fuel spills, stones, gravel, and other construction materials resulting from Contractor's operations, and replace with new planting soil.
E. Mow, dethatch, core aerate, and rake existing turf.
F. Remove weeds before seeding. Where weeds are extensive, apply selective herbicides as required. Do not use pre-emergence herbicides.
G. Remove waste and foreign materials, including weeds, soil cores, grass, vegetation, and turf, and legally dispose of them off Owner's property.
H. Till stripped, bare, and compacted areas thoroughly to a soil depth of 6 inches.
I. Apply soil amendments and initial fertilizer required for establishing new turf and mix thoroughly into top 4 inches of existing soil. Install new planting soil to fill low spots and meet finish grades.
   1. Soil Amendment(s): See landscape notes on plans and Section 329113 Soil Preparation.
   2. Initial Fertilizer: Commercial fertilizer and Slow-release fertilizer are to be applied according to manufacturer's recommendations.
J. Apply seed and protect with straw mulch as required for new turf.
K. Water newly planted areas and keep moist until new turf is established.

3.10 TURF MAINTENANCE

A. General: Maintain and establish turf by watering, fertilizing, weeding, mowing, trimming, replanting, and performing other operations as required to establish healthy, viable turf. Roll, regrade, and replant bare or eroded areas and re-mulch to produce a uniformly smooth turf. Provide materials and installation the same as those used in the original installation.
   1. Fill in as necessary soil subsidence that may occur because of settling or other processes. Replace materials and turf damaged or lost in areas of subsidence.
   2. In areas where mulch has been disturbed by wind or maintenance operations, add new mulch and anchor as required to prevent displacement.
   3. Apply treatments as required to keep turf and soil free of pests and pathogens or disease. Use integrated pest management practices whenever possible to minimize the use of pesticides and reduce hazards.

B. Watering: Install and maintain temporary piping, hoses, and turf-watering equipment to convey water from sources and to keep turf uniformly moist to a depth of 4 inches where irrigation is not installed.
   1. Schedule watering to prevent wilting, puddling, erosion, and displacement of seed or mulch. Lay out temporary watering system to avoid walking over muddy or newly planted areas.
   2. Water turf with fine spray at a minimum rate of 1 inch per week unless rainfall precipitation is adequate.
C. Mow turf as soon as top growth is tall enough to cut. Repeat mowing to maintain specified height without cutting more than one-third of grass height. Remove no more than one-third of grass-leaf growth in initial or subsequent mowings. Do not delay mowing until grass blades bend over and become matted. Do not mow when grass is wet or under frozen conditions.
D. Turf Postfertilization: Apply commercial fertilizer and slow-release fertilizer after initial mowing and when grass is dry.
   1. Use fertilizer that provides actual nitrogen of at least 1 lb/1000 sq. ft. to turf area.

3.11 SATISFACTORY TURF

A. Turf installations shall meet the following criteria as determined by Architect:
   1. Satisfactory Seeded Turf: At end of maintenance period, a healthy, uniform, close stand of grass has been established, free of weeds and surface irregularities, with coverage exceeding 90 percent over any 10 sq. ft. and bare spots not exceeding 5 by 5 inches.
   2. Satisfactory Sodded Turf: At end of maintenance period, a healthy, well-rooted, even-colored, viable turf has been established, free of weeds, open joints, bare areas, and surface irregularities.
   3. Satisfactory Plugged Turf: At end of maintenance period, the required number of plugs has been established as well-rooted, viable patches of grass, and areas between plugs are free of weeds and other undesirable vegetation.
   4. Satisfactory Sprigged Turf: At end of maintenance period, the required number of sprigs has been established as well-rooted, viable plants, and areas between sprigs are free of weeds and other undesirable vegetation.
B. Use specified materials to reestablish turf that does not comply with requirements, and continue maintenance until turf is satisfactory.

3.12 PESTICIDE APPLICATION

A. Apply pesticides and other chemical products and biological control agents according to requirements of authorities having jurisdiction and manufacturer's written recommendations. Coordinate applications with Owner's operations and others in proximity to the Work. Notify Owner before each application is performed.
B. Post-Emergent Herbicides (Selective and Nonselective): Apply only as necessary to treat already-germinated weeds and according to manufacturer's written recommendations.

3.13 CLEANUP AND PROTECTION

A. Promptly remove soil and debris created by turf work from paved areas. Clean wheels of vehicles before leaving site to avoid tracking soil onto roads, walks, or other paved areas.
B. Remove surplus soil and waste material, including excess subsoil, unsuitable soil, trash, and debris, and legally dispose of them off Owner's property.
C. Erect temporary fencing or barricades and warning signs as required to protect newly planted areas from traffic. Maintain fencing and barricades throughout initial maintenance period and remove offsite after plantings are established.
D. Remove nondegradable erosion-control measures after grass establishment period.

3.14 MAINTENANCE SERVICE

A. Turf Maintenance Service: Provide full maintenance by skilled employees of landscape Installer. Maintain as required in "Turf Maintenance" Article. Begin maintenance immediately after each

area is planted and continue until acceptable turf is established, but for not less than the following periods:

1. Seeded or Sodded Turf: 90 days from date of owner's Substantial Completion acceptance.
    a. When initial maintenance period has not elapsed before end of planting season, or if turf is not fully established, continue maintenance during next planting season.

END OF SECTION

SECTION 331400 - WATER SYSTEM

PART 1 - GENERAL

1.01 RELATED DOCUMENTS

A. Drawings and general provisions of the Contract, including General and Supplementary Conditions and Division 01 Specification Sections, apply to this Section.

1.02 SUMMARY

A. This Section includes water-distribution piping and related components outside the building for water service.

B. Submittals

1. Product Data: For each type of product indicated.
2. Shop Drawings: Detail precast concrete vault assemblies and indicate dimensions, method of field assembly, and components.
3. Materials Certificates: Provide copies of materials certificates signed by material supplier and contractor, certifying that all materials comply with or exceed specifications.

C. Operation and Maintenance Data: For water valves and specialties to include in emergency, operation, and maintenance manuals.

1.03 QUALITY ASSURANCE

A. Reference Standards:

1. Station 53:
   a. Service Policy, Fox Island Mutual Water Association, Fox Island, WA. January 2022.
2. Station 57:
   a. Billing Rates, Rules & Regulations Information, Washington Water Service, Gig Harbor, WA. 2018.
3. American Public Works Association (APWA), “2018 Greenbook: Standard Specifications for Public Works Construction” and supplements.
4. Uniform Plumbing Code (UPC), 2018 edition.
5. American Water Works Association Standards (AWWA), latest standards.
6. WSDOT "Standard Specifications for Road, Bridge, and Municipal Construction 2023”.

B. Testing

1. Test water systems for hydrostatic pressure and microbiological disinfection in accordance with water purveyor, WSDOT, and UPC requirements.
2. Correct and retest for approval deficiencies revealed in testing of system indicated above.

1.04 DELIVERY, STORAGE, AND HANDLING

A. Preparation for Transport: Prepare valves, including fire hydrants, according to the following:

1. Ensure that valves are dry and internally protected against rust and corrosion.
2. Protect valves against damage to threaded ends and flange faces.
3. Set valves in best position for handling. Set valves closed to prevent rattling.

B. During Storage: Use precautions for valves, according to the following:

1. Do not remove end protectors unless necessary for inspection; then reinstall for storage.
2. Protect from weather. Store indoors and maintain temperature higher than ambient dew-point temperature. Support off the ground or pavement in watertight enclosures when outdoor storage is necessary.

C. Deliver piping with factory-applied end caps. Maintain end caps through shipping, storage, and handling to prevent pipe-end damage and to prevent entrance of dirt, debris, and moisture.

D. Protect stored piping from moisture and dirt. Elevate above grade. Do not exceed structural capacity of floor when storing inside.

E. Protect flanges, fittings, and specialties from moisture and dirt.

F. Store plastic piping protected from direct sunlight. Support to prevent sagging and bending.

1.05 PROJECT CONDITIONS

A. The water purveyors are:

1. Station 53: Fox Island Mutual Water Association, Fox Island, WA
2. Station 57: Washington Water Service, Gig Harbor, WA

B. Interruption of Existing Water-Distribution Service: Do not interrupt service to facilities occupied by Owner or others unless permitted under the following conditions and then only after arranging to provide temporary water-distribution service according to requirements indicated:
   1. Notify the water purveyor and all affected residents and businesses a minimum of 24 business hours in advance of proposed interruption of service.
   2. Do not proceed with interruption of the water-distribution service without written permission from the water purveyor.

1.06 COORDINATION
A. Coordinate connection to water main with the water purveyor.

PART 2 - PRODUCTS

2.01 PIPE BEDDING AND BACKFILL
A. Backfill Class A in accordance with WSDOT Standard Specification 9-03.12(3) in areas out of public rights-of-way.

2.02 PIPE AND FITTINGS
A. Pipe:
   1. See water purveyor development requirements. If the purveyor does not have specific requirements, WSDOT standard specifications shall apply.
B. Fittings:
   1. See water purveyor development requirements. If the purveyor does not have specific requirements, WSDOT standard specifications shall apply.
C. Couplings:
   1. Flexible Couplings. Flexible couplings shall meet the requirements of the water purveyor. If the purveyor does not have specific requirements, WSDOT standard specifications shall apply.

2.03 GATE VALVE ACCESSORIES AND SPECIALTIES
A. Valve Boxes: See water purveyor development requirements. If the purveyor does not have specific requirements, WSDOT standard specifications shall apply.

2.04 WATER METERS
A. Water meters will be furnished by the water purveyor.

2.05 BACKFLOW PREVENTERS
A. Reduced Pressure, Backflow-Prevention Assemblies:
   1. Shall meet the requirements of the water purveyor approved material list.
   2. Standard: AWWA C510.
   3. Operation: Continuous-pressure applications, unless otherwise indicated.
   4. Pressure Loss: 5 psig maximum, through middle 1/3 of flow range.
   5. Body: Bronze for NPS 2 and smaller; cast iron with interior lining complying with AWWA C550 or that is FDA approved stainless steel for NPS 2-1/2 and larger.
   6. End Connections: Threaded for NPS 2 and smaller; flanged for NPS 2-1/2 and larger.
   7. Configuration: Designed for horizontal, straight through flow.
   8. Accessories: Ball valves with threaded ends on inlet and outlet of NPS 2 and smaller; OS&Y gate valves with flanged ends on inlet and outlet of NPS 2-1/2 and larger.

2.06 WATER METER BOXES
A. Description: Water meter box per the water purveyor development requirements.

2.07 PIPING APPLICATIONS
A. General: Use pipe, fittings, and joining methods for piping systems that comply with water purveyor development requirements. If the purveyor does not have specific requirements, WSDOT standard specifications shall apply.
B. Transition couplings and special fittings with pressure ratings at least equal to piping pressure rating may be used, unless otherwise indicated.
C. Do not use flanges or unions for underground piping.

2.08 VALVE APPLICATIONS
A. All valves shall be of one manufacturer, unless approved differently by Project Engineer.
B. Piping 2-inch and smaller per domestic water – ball valves may be used.

PART 3 - EXECUTION

3.01 PIPING INSTALLATION

A. Install ductile-iron piping per water purveyor development requirements. If the purveyor does not have specific requirements, WSDOT standard specifications shall apply.

B. Bury piping with depth of cover over top at least 36 inches. Water services shall be installed with a minimum 36-inch cover.

C. Extend water-service piping and connect to water-supply source and building-water-piping systems at outside face of building wall in locations and pipe sizes indicated.

1. Terminate water-service piping at building wall until building-water-piping systems are installed. Terminate piping with caps, plugs, or flanges as required for piping material. Make connections to building-water-piping systems when those systems are installed.

3.02 VALVE INSTALLATION

A. Shall comply with water purveyor development requirements. If the purveyor does not have specific requirements, WSDOT standard specifications shall apply.

3.03 PROTECTIVE ENCLOSURE INSTALLATION

A. Install concrete base level and with top approximately 2 inches above grade.

B. Install protective enclosure over valves and equipment.

C. Anchor protective enclosure to concrete base.

3.04 IDENTIFICATION

A. Install continuous underground (detectable) warning tape during backfilling of trench for underground water-distribution piping. Locate below finished grade, directly over piping.

B. #14 copper tracer wire shall be wrapped around all non-metallic pipes.

3.05 CLEANING

A. Pressure Testing and Disinfection shall comply with water purveyor, WSDOT, and UPC development requirements.

END OF SECTION

SECTION 333113 - SITE SANITARY SEWERAGE

PART 1 - GENERAL

1.01 RELATED DOCUMENTS

A. Drawings and general provisions of the Contract, including General and Supplementary Conditions and Division 01 Specification Sections, apply to this Section.

B. Related Sections include the following:

1. Division 01 Section “Project Record Documents” for as-built documentation.
2. Division 31 Section “Earth Moving” for utility trenching and backfill.

1.02 SUMMARY

A. This Section includes gravity-flow, non-pressure sanitary sewerage outside the building, with the following components:

1. Cleanouts
2. Piping

1.03 DEFINITIONS

A. PVC: Polyvinyl chloride plastic (SDR 35).

1.04 QUALITY ASSURANCE

A. Reference Standards:

1. Pierce County, “Sanitary Sewer Standard Details Manual”, December 2012.
2. Gravity-Flow, Non-pressure, Drainage-Piping Pressure Rating per 2018 APWA.
3. WSDOT "2023 Standard Specifications for Road, Bridge, and Municipal Construction”.

1.05 SUBMITTALS

A. Field quality-control test reports.

B. Product data for the following:

1. Piping material
2. Cleanouts
3. Fittings and Gaskets

C. “As-built” record documents: Provide survey data indicating the horizontal location and pipe invert elevations for each installed sanitary sewer manhole, cleanout, tank, and structure.

1.06 DELIVERY, STORAGE, AND HANDLING

A. Do not store plastic pipes and fittings in direct sunlight. Adequately support materials to prevent sagging.

B. Protect pipe, pipe fittings, and seals from dirt and damage.

PART 2 - PRODUCTS

2.01 PVC PIPE AND FITTINGS

A. PVC Sewer Pipe and Fittings: ASTM D 3034, SDR 35 minimum stiffness shall be 46 PSI per A STM D-2412. The joints type shall be elastomeric gasket conforming to ASTM D-3212.

2.02 CLEANOUTS

A. PVC Cleanouts: PVC body with PVC threaded plug. Include PVC sewer pipe fitting and riser to clean out of same material as sewer piping. See Pierce County Sanitary Sewer Standard Details for cleanouts and boxes.

2.03 ECCENTRIC REDUCER

A. Spears or approved equal. Schedule 80 PVC reducer manufactured to ASTM D 2467 for use with pipe manufactured to ASTM D 1785.

PART 3 - EXECUTION

3.01 EARTHWORK

A. Excavating, trenching, and backfilling per Division 31 Section “Earth Moving”.

B. Do not clear, grub, and mass excavate drain field and reserve areas. Drain field trenches shall not be placed in fill. Selective clearing may be performed only as necessary to accommodate trenches. Refer to plan notes within the on-site sewage disposal design drawings.

3.02 PIPING APPLICATIONS

A. Pipe couplings and special pipe fittings with pressure ratings at least equal to piping rating may be used in applications below, unless otherwise indicated.

1. Use non-pressure-type flexible couplings where required to join gravity-flow, non-pressure sewer piping, unless otherwise indicated.

B. Special Pipe Fittings: Use for pipe expansion and deflection. Pipe couplings and special pipe fittings with pressure ratings at least equal to piping rating may be used in applications below, if allowed by Pierce County.
   1. PVC sewer pipe and fittings, gaskets, and gasketed joints.

3.03 PIPING INSTALLATION

A. General Locations and Arrangements: Drawing plans and details indicate general location and arrangement of underground sanitary sewerage piping. Location and arrangement of piping layout take design considerations into account. Install piping as indicated, to the extent practical. Where specific installation is not indicated, follow the piping manufacturer's written instructions.

B. Install piping beginning at low point, true to grades and alignment indicated with unbroken continuity of invert. Place bell ends of piping facing upstream. Install gaskets, seals, sleeves, and couplings according to manufacturer's written instructions for using lubricants, cements, and other installation requirements.

C. Install proper size increasers, reducers, and couplings where different sizes or materials of pipes and fittings are connected. Reducing the size of piping in the direction of flow is prohibited.

D. Install gravity-flow, non-pressure, drainage piping according to the following:
   1. Install piping pitched down in direction of flow, at minimum slope of 2 percent, unless otherwise indicated.
   2. Install PVC sewer piping according to ASTM D 2321 and ASTM F 1668.

E. Clear interior of piping of dirt and superfluous material as work progresses. Maintain swab or drag in piping and pull past each joint as it is completed. Place plug in end of incomplete piping at end of day and when work stops.

3.04 PIPE JOINT CONSTRUCTION

A. Join gravity-flow, non-pressure, piping according to the following:
   1. Join PVC sewer piping according to ASTM D 2321 for elastomeric gasket joints.

3.05 CLEANOUT INSTALLATION

A. Install cleanouts and riser extensions from sewer pipes to cleanouts at grade. Install piping so cleanouts open in direction of flow in sewer pipe.

B. Set cleanout frames and covers in concrete pavement with tops flush with pavement surface.

3.06 CONNECTIONS

A. Connect non-pressure, gravity-flow drainage piping to building’s sanitary building drains in accordance with the Pierce County standards.

3.07 IDENTIFICATION

A. Materials and their installation are specified in Division 31 Section "Earth Moving" Arrange for installation of green warning tapes directly over piping and at outside edges of underground manholes.
   1. Use detectable warning tape over ferrous and nonferrous piping.
   2. All non-metallic pipes shall be installed with #14 copper tracer wire.

3.08 FIELD QUALITY CONTROL

A. Inspect interior of piping to determine whether line displacement or other damage has occurred. Inspect after approximately 24 inches of backfill is in place, and again at completion of Project.
   1. Submit a separate report for each system inspection.
   2. Defects requiring correction include the following:
      a. Alignment: Less than full diameter of inside of pipe is visible between structures.
      b. Deflection: Flexible piping with deflection that prevents passage of ball or cylinder of size not less than 92.5 percent of piping diameter.
      c. Crushed, broken, cracked, or otherwise damaged piping.
      d. Infiltration: Water leakage into piping.
      e. Exfiltration: Water leakage from or around piping.
   3. Replace defective piping using new materials and repeat inspections until defects are within allowances specified.
   4. Re-inspect and repeat the procedure until results are satisfactory.

B. Test new piping systems, and parts of existing systems that have been altered, extended, or repaired, for leaks and defects.
   1. Do not enclose, cover, or put into service before inspection and approval.
   2. Test completed piping systems according to requirements of authorities having jurisdiction.
   3. Schedule tests and inspections by authorities having jurisdiction with at least 24 hours' advance notice.
   4. Submit a separate report for each test.
   5. Air test gravity sanitary sewer piping in accordance with deflection tested in accordance with Pierce County standards, 2018 APWA/2021 WSDOT.

C. Leaks and loss in test pressure constitute defects that must be repaired, per Pierce County standards.

D. Replace leaking piping using new materials and repeat testing until leakage is within allowances specified.

3.09 CLEANING

A. Clean interior of piping of dirt and superfluous material.

END OF SECTION

SECTION 334116 - SUBDRAINAGE PIPING

PART 1 - GENERAL

1.01 RELATED DOCUMENTS

A. Drawings and general provisions of the Contract, including General and Supplementary Conditions and Division 01 Specification Sections, apply to this Section.

1.02 SUMMARY

A. This Section includes subdrainage systems for the following:
   1. Foundations.

1.03 DEFINITIONS

A. PVC: Polyvinyl chloride plastic.

B. Subdrainage: Drainage systems that collect and remove subsurface or seepage water from building foundations and retaining walls.

1.04 SUBMITTALS

A. Product Data: For the following:
   1. Perforated-wall pipe and fittings.
   2. Geotextile filter fabric.
   3. Drain Rock

PART 2 - PRODUCTS

2.01 MANUFACTURERS

A. In other Part 2 articles where titles below introduce lists, the following requirements apply to product selection:
   1. Available Manufacturers: Subject to compliance with requirements, manufacturers offering products that may be incorporated into the Work include, but are not limited to, manufacturers specified.

2.02 PERFORATED-DRAIN PIPES AND FITTINGS

A. ADS perforated Single Wall HDPE Pipe, pattern type B and Fittings or approved equal: ASTM F 667, Joins shall be made with split or snap couplings. Standard connections shall meet the requirements of the ASTM F667. Gasketed connections shall incorporate a closed-cell synthetic expanded rubber gasket meeting the requirements of ASTM D 1056 Grade 2A2. Pipe and fitting material shall be high-density polyethylene conforming with the minimum requirement of cell classifications 323410C or 333410C as defined and described in the latest version of ASTM D3350.

2.03 SOIL MATERIALS

A. Backfill, drainage course, and satisfactory soil materials are specified on civil plans.

2.04 GEOTEXTILE FILTER FABRICS

A. Description: Mirafi or approved equal fabric of PP or polyester fibers or combination of both. Flow rate between 110 and 330 gpm/sq. ft. when tested according to ASTM D 4491.
   1. Structure Type: Nonwoven, needle-punched continuous filament or woven, monofilament or multifilament.
   2. Style(s): Flat and sock.

2.05 DRAIN ROCK

A. Description: Clean ¾”- ½” Drain Rock meeting requirements of WSDOT Standard Specification section 9-03.12(4).

2.06 DRAINAGE MAT

A. Prefabricated drainage mat may be placed at building foundations and/or retaining walls as a substitute for drain rock. When used, drainage mat shall meet requirements of WSDOT Standard Specification section 9-33.2(3).

PART 3 - EXECUTION

3.01 EXAMINATION

A. Examine surfaces and areas for suitable conditions where subdrainage systems are to be installed.

B. Proceed with installation only after unsatisfactory conditions have been corrected.

3.02 EARTHWORK

A. Excavating, trenching, and backfilling shall follow Division 31 Section “Earth Moving” methods and standards.

3.03 PIPING INSTALLATION

A. Install piping beginning at low points of system, true to grades and alignment indicated, with unbroken continuity of invert. Bed piping with full bearing in filtering material. Install gaskets, seals, sleeves, and couplings according to manufacturer's written instructions and other requirements indicated.

1. Subdrainage: Install piping pitched down in the direction of flow, at a minimum slope of 0.5 percent and with a minimum cover of 12 inches, unless otherwise indicated.
2. Lay perforated pipe with perforations down.
3. Install drain rock and filter fabric as detailed on the drawings.

3.04 PIPE JOINT CONSTRUCTION

A. Join PVC pipe and fittings according to ASTM D 3034 with elastomeric seal gaskets according to ASTM D 2321.

3.05 FIELD QUALITY CONTROL

A. Testing: After installing drainage course to top of piping, test drain piping with water to ensure free flow before backfilling. Remove obstructions, replace damaged components, and repeat test until results are satisfactory.

3.06 CLEANING

A. Clear interior of installed piping and structures of dirt and other superfluous material as work progresses. Maintain swab or drag in piping and pull past each joint as it is completed. Place plugs in ends of uncompleted pipe at end of each day or when work stops.

END OF SECTION

SECTION 334200 - STORMWATER CONVEYANCE

PART 1 - GENERAL

1.01 RELATED DOCUMENTS

A. Drawings and general provisions of the Contract, including General and Supplementary Conditions and Division 01 Specification Sections, apply to this Section.

B. Related Sections include the following:

1. Division 01 Section "Project Record Documents" for as-built documentation.
2. Division 31 Section "Earth Moving" for excavation, trenching, and backfilling.

1.02 SUMMARY

A. This Section includes gravity-flow, non-pressure storm drainage outside the building, with the following components:

3. Storm pipes and fittings
4. Area drains
5. Catch basins
6. Storm cleanouts
7. Downspout boot connections
8. Drywells and infiltration trenches
9. Storm pipe bedding

1.03 DEFINITIONS

A. PVC: Polyvinyl chloride plastic.

B. HDPE (N-12): High-density polyethylene.

1.04 QUALITY ASSURANCE

A. Reference Standards:

1. Gravity-Flow, Non-pressure, Drainage-Piping Pressure Rating per 2018 APWA.
2. WSDOT "2023 Standard Specifications for Road, Bridge, and Municipal Construction".
3. Pierce County "Standard Drawings"
4. Pierce County "2021 Stormwater Management & Site Development Manual"

1.05 SUBMITTALS

A. Product Data: For each type of product.

B. Shop Drawings:

1. Catch Basins and Manholes: Include plans, elevations, sections, details, frames, and covers/grates.

C. Field quality-control test reports.

D. "As-built" record documents

1. Provide survey data indicating the horizontal location and pipe invert elevations for each installed stormwater area drain, trench drain, catch basin, manhole, outlet control structure, and outlet pipe.
2. Provide survey data indicating the horizontal locations and vertical elevation for the centerline, bottom width, and top of bank for each constructed permanent, open channel.
3. Provide survey data indicating the horizontal locations and vertical elevations for the bottom perimeter and top of bank for each constructed stormwater management facility.

1.06 DELIVERY, STORAGE, AND HANDLING

A. Protect pipe, pipe fittings, structures, seals, and geotextiles from dirt and damage.

B. Handle all materials in accordance with manufacturer's written instructions.

PART 2 - PRODUCTS

2.01 HIGH-DENSITY POLYETHYLENE (HDPE) PIPE AND FITTINGS

A. WSDOT Standard Specification 9-05.23.

2.02 PVC PIPE AND FITTINGS

A. WSDOT Standard Specification 9-05.1(5).

2.03 AREA DRAINS

A. Area drains shall be ADS Nyloplast basins.

B. All grates shall be one-piece cast iron (no welding allowed), manufactured to conform to an H-20-wheel load and comply with Americans with Disabilities Act (ADA) requirements.

2.04 CATCH BASINS

A. WSDOT Standard Specifications 7-05 and 9-05.50(3).

2.05 CLEANOUTS

A. WSDOT Standard Specifications 7-19.

B. PVC body with PVC threaded plug. Include PVC pipe fitting and riser to clean out of same material as storm drain piping. Provide cast iron ring and cover when cleanout is located within the limits of pavement.

2.06 DOWNSPOUT BOOT CONNECTION

A. PVC adaptors with 6” wye cleanouts and end caps.

2.07 INFILTRATION TRENCHES

A. Perforated N-12 HDPE per WSDOT Standard Specification 9-05.2(8)

B. Non-woven filter fabric meeting the following requirements:

Grab Tensile Strength	ASTM D-4632	200 lbs. min.
Elongation	ASTM D-4632	50% max.
CBR Puncture	ASTM D-6241	500 lbs. min.
Trapezoidal Tear	ASTM D-4533	75 lbs. min.
Apparent Opening Size	ASTM D-4751	80 US sieve
Permittivity	ASTM D-4491	1.2 sec^{-1} min.
UV Resistance @ 500 hours	ASTM D-4355	50% min.

C. Drain rock shall consist of gravel backfill for drywells per WSDOT Standard Specification 9-03.12(5).

PART 3 - <u>EXECUTION</u>

3.01 PIPING INSTALLATION

A. General Locations and Arrangements: Drawing plans and details indicate general location and arrangement of underground storm drainage piping. Location and arrangement of piping layout take design considerations into account. Install piping as indicated, to the extent practical. Where specific installation is not indicated, follow the piping manufacturer's written instructions.

B. Install piping beginning at low point, true to grades and alignment indicated with unbroken continuity of invert. Place bell ends of piping facing upstream. Install gaskets, seals, sleeves, and couplings according to manufacturer's written instructions for use of lubricants, cements, and other installation requirements.

C. Install proper size increasers, reducers, and couplings where different sizes or materials of pipes and fittings are connected. Reducing the size of piping in the direction of flow is prohibited.

D. Install gravity-flow, non-pressure drainage piping according to the following:

2. Install piping pitched down in direction of flow, at minimum slope of 1 percent, unless otherwise indicated.

E. Pipe installation shall follow 2018 APWA.

F. All non-metallic pipes shall be installed with #14 copper tracer wire. Wrap around pipe and terminate at all structures.

3.02 PIPE JOINT CONSTRUCTION

A. Deflect storm sewer pipes into catch basins/area drains and cleanout or manholes as required on plans. Maximum joint deflections shall not exceed 5 degrees or according to manufacturer’s recommendations, whichever is less.

3.03 AREA DRAINS/CATCH BASINS

A. Area drains and catch basins shall be set square with curbs and edge of paths. All drainage structures shall be adjusted so water flow will into them without ponding.

3.04 CLEANOUT INSTALLATION

A. Install cleanouts and riser extension from storm pipe to cleanouts at grade.

B. Provide cast iron ring and cover when cleanout is located within the limits of pavement.

C. Set cleanout frames and covers in concrete pavement with tops flush with pavement surface.

3.05 IDENTIFICATION

A. Use detectable warning tape over ferrous piping.

3.06 FIELD QUALITY CONTROL

A. Inspect interior of piping to determine whether line displacement or other damage has occurred. Inspect after approximately 24 inches (610 mm) of backfill is in place, and again at completion of Project.
   1. Submit separate reports for each system inspection.
   2. Defects requiring correction include the following:
      a. Alignment: Less than full diameter of inside of pipe is visible between structures.
      b. Deflection: Flexible piping with deflection that prevents passage of ball or cylinder of size not less than 92.5 percent of piping diameter.
      c. Crushed, broken, cracked, or otherwise damaged piping.
      d. Infiltration: Water leakage into piping.
      e. Exfiltration: Water leakage from or around piping.
   3. Replace defective piping using new materials and repeat inspections until defects are within allowances specified.
   4. Re-inspect and repeat the procedure until the results are satisfactory.

B. Test new piping systems, and parts of existing systems that have been altered, extended, or repaired, for leaks and defects.
   1. Do not enclose, cover, or put into service before inspection and approval.
   2. Test completed piping systems according to authorities having jurisdiction.
   3. Schedule tests and inspections by authorities having jurisdiction with at least 24 hours' advance notice.
   4. Submit a separate report for each test.
   5. Gravity-Flow Storm Drainage Piping: Test according to requirements of authorities having jurisdiction, UNI-B-6, and the following:
      a. Exception: Piping with soil tight joints unless required by authorities having jurisdiction.
   6. Before mandrel testing or final acceptance, flush and clean all storm drains, and remove all foreign material from the mainlines, manholes and catch basins.
   7. Contractor shall conduct deflection test of flexible storm sewer pipes by pulling an approved mandrel through the completed pipeline following trench compaction. The diameter of the mandrel shall be 95% of the initial pipe diameter. Test shall be conducted not more than 30 days after the trench backfilling and compaction has been completed.

C. Leaks and loss in test pressure constitute defects that must be repaired.

D. Replace leaking piping using new materials and repeat testing until leakage is within allowances specified.

3.07 CLEANING

A. Clean interior of piping of dirt and superfluous materials.

B. At the end of the project, the contractor shall clean all drainage structures within the project limits.

END OF SECTION